CITY OF FLINT
WATER POLLUTION CONTROL
AERATION SYSTEM IMPROVEMENTS

SRF NO. 5696-01

400 SOUTH WASHINGTON SQ, SUITE 100
LANSING, MI, 48933
PHONE: (517) 316-3930 FAX (517) 484-8140
www.tetratech.com
TETRA TECH

PROJECT LOCATION:
CITY OF FLINT WATER POLLUTION CONTROL FACILTIY
4652 BEECHER RD, FLINT MI 48532

CLIENT INFORMATION:
CITY OF FLINT

Tt PROJECT No.:
200-156238-19001

CLIENT PROJECT No.:

PROJECT DESCRIPTION / NOTES:
WATER POLLUTION CONTROL -
AERATION SYSTEM IMPROVEMENTS - SRF NO. 5696-01

ISSUED:
ISSUED FOR BIDS - 05/29/20

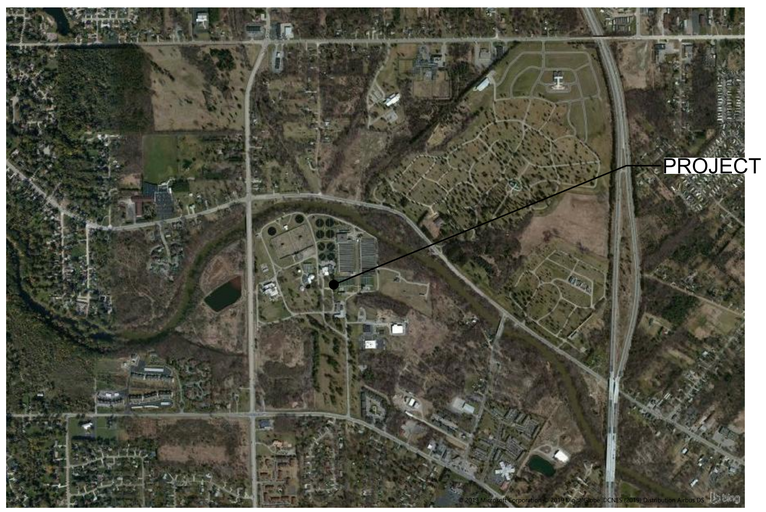

LOCATION MAP
SCALE: NONE

N

VOLUME II OF II

VICINITY MAP:

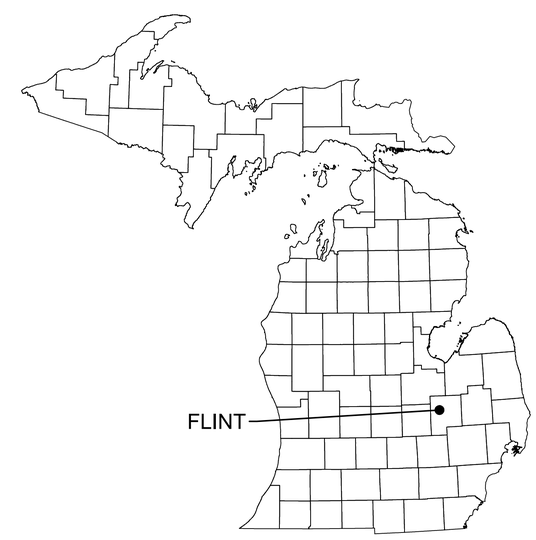

CALL MISS DIG
(800) 482-7171

FOR PROTECTION OF UNDERGROUND UTILITIES AND IN CONFORMANCE WITH PUBLIC ACT 53, 1974, THE CONTRACTOR SHALL CALL (800) 482-7171 A MINIMUM OF THREE (3) FULL WORKING DAYS (EXCLUDING SATURDAYS, SUNDAYS AND HOLIDAYS) PRIOR TO EXCAVATING IN THE VICINITY OF UTILITY LINES. ALL "MISS DIG" PARTICIPATING MEMBERS WILL THUS BE ROUTINELY NOTIFIED. THIS DOES NOT RELIEVE THE CONTRACTOR OF THE RESPONSIBILITY OF NOTIFYING UTILITY OWNERS WHO MAY NOT BE A PART OF THE "MISS DIG" ALERT SYSTEM.

SHEET INDEX - VOLUME I OF II

Sheet No.	General
G-000	TITLE SHEET
G-001	SHEET INDEX
G-002	GENERAL NOTES
G-100	OVERALL SITE PLAN
Sheet No.	**Structural**
S-001	STRUCTURAL GENERAL NOTES
S-002	STRUCTURAL GENERAL NOTES AND SPECIAL INSPECTIONS
S-101	AERATION TANKS BATTERY A DEMOLITION PLAN
S-102	AERATION TANKS BATTERY B DEMOLITION PLAN
S-103	AERATION TANKS BATTERY A PLAN
S-104	AERATION TANKS BATTERY B PLAN
S-105	AERATION TANKS ENLARGED PLANS
S-201	STRUCTURAL REPAIR PHOTOS
S-202	STRUCTURAL REPAIR PHOTOS
S-203	STRUCTURAL REPAIR PHOTOS
S-204	STRUCTURAL REPAIR PHOTOS
S-301	STRUCTURAL SECTIONS
S-501	STRUCTURAL REPAIR DETAILS
S-502	STRUCTURAL DETAILS
Sheet No.	**Process & Equipment**
D-001	LEGEND
D-002	EXISTING PROCESS FLOW DIAGRAM
D-003	DEMOLITION & PROPOSED PROCESS FLOW DIAGRAM
D-004	PROPOSED FLOW DIAGRAM LOW PRESSURE AIR
D-005	PROPOSED FLOW DIAGRAM HIGH PRESSURE AIR
D-101	BLOWER ROOM FIRST FLOOR PLAN
D-102	BLOWER ROOM LOWER LEVEL PLAN
D-103	EQUIPMENT BUILDING LOWER LEVEL PLAN
D-104	BATTERY B GRIT BUILDING LOWER LEVEL PLAN AND SECTION
D-105	AERATION TANKS OVERALL PLAN
D-106	BATTERY "A" TANKS AND GALLERY PLAN
D-107	BATTERY "B" TANKS AND GALLERY PLAN
D-108	AERATION TANK AND GALLERY MODIFICATIONS PLANS
D-109	PRIMARY TANK INFLUENT CHANNEL PLAN
D-110	EXISTING INLET FILTER MODIFICATIONS
D-301	BLOWER ROOM SECTIONS
D-302	EQUIPMENT BUILDING SECTIONS
D-303	TANK DIFUSER GRID SECTIONS
D-304	BATTERY A GALLERY SECTIONS
D-305	BATTERY B GALLERY SECTIONS
D-306	BATTERY A GATES SECTIONS
D-307	COMPRESSED AIR SECTIONS
D-308	BUTTERFLY GATE SECTIONS
D-500	DETAILS
D-501	DETAILS
D-600	SCHEDULES
DD-101	BLOWER ROOM DEMO
DD-102	AERATION TANK BATTERY A PIPING DEMOLITION PLANS
DD-103	AERATION TANK BATTERY A PIPING DEMOLITION SECTIONS
DD-104	AERATION TANK BATTERY B PIPING DEMOLITION PLANS
DD-105	AERATION TANK BATTERY B PIPING DEMOLITION SECTIONS
DD-106	BATTERY A GATES DEMOLITION PLAN
DD-107	BATTERY A GATES DEMOLITION SECTIONS
DD-108	PRIMARY TANK CHANNEL MIXING DEMOLITION SECTIONS
DD-109	AERATION TANK BATTERY A PIPING DEMOLITION PLANS
DD-110	BATTERY B GRIT BUILDING DEMOLITION PLAN
DD-111	EQUIPMENT BUILDING LOWER LEVEL DEMOLITION PLAN

SHEET INDEX - VOLUME II OF II

Sheet No.	Electrical
E-001	ELECTRICAL LEGEND
E-002	ELECTRICAL NOTES
E-003	ELECTRICAL EXISTING SITE PLAN DEMOLITION
E-004	ELECTRICAL EXISTING SITE PLAN LOCATION PLAN PROPOSED WORK
E-100	EXISTING PARTIAL POWER ONE-LINE DEMOLITION
E-101	EXISTING PARTIAL POWER ONE-LINE DEMOLITION
E-102	EXISTING OVERALL POWER ONE-LINE DEMOLITION, PROPOSED WORK
E-103	5KV POWER ONE-LINE DIAGRAM
E-104	MOTOR CONTROL CENTER ONE-LINE PROPOSED WORK
E-105	MOTOR CONTROL CENTER ONE-LINE PROPOSED WORK
E-106	MOTOR CONTROL CENTER ONE-LINE PROPOSED WORK
E-107	MOTOR CONTROL CENTER ONE-LINE PROPOSED WORK
E-108	MOTOR CONTROL CENTER ONE-LINE PROPOSED WORK
E-200	WIRING DIAGRAMS
E-201	PANELBOARD SCHEDULES
E-300	AERATION TANKS OVERALL ELECTRICAL PLAN
E-301	EXISTING BLOWER BUILDING BACKGROUND PLAN DEMOLITION
E-302	EXISTING BLOWER BUILDING BACKGROUND PLAN LOWER LEVEL DEMOLITION
E-303	AERATION TANK BATTERY "A" PIPING DEMOLITION PLANS
E-304	TANK BATTERY "A" PIPE GALLERY BACKGROUND PLAN DEMOLITION
E-305	AERATION TANK BATTERY "A" PIPING DEMOLITION PLANS
E-306	AERATION TANK BATTERY "B" PIPING DEMOLITION PLANS
E-307	AERATION TANK BATTERY "B" PIPING DEMOLITION PLANS
E-308	BLOWER ROOM UPPER LEVEL PLAN PROPOSED WORK
E-309	BLOWER ROOM SECTIONS
E-310	BLOWER ROOM FIRST FLOOR PLAN PROPOSED WORK
E-311	BATTERY "A" TANKS, AND GALLERY ELECTRICAL PLAN
E-312	BATTERY "A" TANKS, AND GALLERY ELECTRICAL PLAN
E-313	BATTERY "B" TANKS, AND GALLERY ELECTRICAL PLAN
E-314	BATTERY "B" TANKS, AND GALLERY ELECTRICAL PLAN
E-315	BATTERY "B" TANKS, AND GALLERY ELECTRICAL PLAN
E-316	AERATION TANKS OVERALL ELECTRICAL PLAN MIXING VALVE CONTROL STATIONS
E-317	AERATION TANKS OVERALL ELECTRICAL PLAN
E-318	EQUIPMENT BUILDING UPPER LEVEL PLAN
E-319	EQUIPMENT BUILDING LOWER LEVEL PLAN
E-320	GRIT BUILDING-B LOWER LEVEL PLAN AND SECTION
E-400	ELECTRICAL DETAILS
E-401	ELECTRICAL DETAILS
E-402	ELECTRICAL DETAILS
E-403	ELECTRICAL DETAILS
Sheet No.	**Instrumentation**
I-001	INSTRUMENTATION LEGEND
I-002	INSTRUMENTATION NOTES
I-100	SYSTEM CONFIGURATION DIAGRAM
I-200	P&ID PROCESS FLOW DIAGRAM
I-201	P&ID PROCESS FLOW DIAGRAM
I-202	P&ID PROCESS FLOW DIAGRAM
I-300	
I-301	INSTRUMENTATION BLOWER PROCESSOR PANEL (BPP) PANEL LAYOUT, WIRING DIAGRAM, RACK 0
I-302	BLOWER PROCESSOR PANEL (BPP) PANEL LAYOUT, WIRING DIAGRAM, RACK 0
I-303	INSTRUMENTATION BLOWER PROCESSOR PANEL (BPP) PANEL LAYOUT, WIRING DIAGRAM, RACK 0
I-304	INSTRUMENTATION BLOWER PROCESSOR PANEL (BPP) PANEL LAYOUT, WIRING DIAGRAM, RACK 0
I-305	INSTRUMENTATION BLOWER PROCESSOR PANEL (BPP) PANEL LAYOUT, WIRING DIAGRAM, RACK 0
I-306	INSTRUMENTATION BLOWER PROCESSOR PANEL (BPP) PANEL LAYOUT, WIRING DIAGRAM, RACK 0
I-307	INSTRUMENTATION BLOWER I/O PANEL NO.1 RACK 1 WIRING DIAGRAM
I-308	INSTRUMENTATION BLOWER I/O PANEL NO.1 RACK 1 WIRING DIAGRAM
I-309	INSTRUMENTATION BLOWER I/O PANEL NO.1 RACK 1 WIRING DIAGRAM
I-310	INSTRUMENTATION BLOWER I/O PANEL NO.1 RACK 1 WIRING DIAGRAM
I-311	INSTRUMENTATION BLOWER I/O PANEL NO.1 RACK 1 WIRING DIAGRAM
I-312	INSTRUMENTATION BLOWER I/O PANEL NO.2 RACK 2 WIRING DIAGRAM
I-313	INSTRUMENTATION BLOWER I/O PANEL NO.2 RACK 2 WIRING DIAGRAM
I-314	INSTRUMENTATION BLOWER I/O PANEL NO.2 RACK 2 WIRING DIAGRAM
I-315	INSTRUMENTATION BLOWER I/O PANEL NO.2 RACK 2 WIRING DIAGRAM
I-316	INSTRUMENTATION BLOWER I/O PANEL NO.2 RACK 2 WIRING DIAGRAM
I-317	INSTRUMENTATION BLOWER I/O PANEL NO.3 RACK 3 WIRING DIAGRAM
I-318	INSTRUMENTATION BLOWER I/O PANEL NO.3 RACK 3 WIRING DIAGRAM
I-319	INSTRUMENTATION BLOWER I/O PANEL NO.3 RACK 3 WIRING DIAGRAM
I-320	INSTRUMENTATION BLOWER I/O PANEL NO.3 RACK 3 WIRING DIAGRAM
I-321	INSTRUMENTATION BLOWER I/O PANEL NO.3 RACK 3 WIRING DIAGRAM
I-322	INSTRUMENTATION BLOWER I/O PANEL NO.4 RACK 4 WIRING DIAGRAM
I-323	INSTRUMENTATION BLOWER I/O PANEL NO.4 RACK 4 WIRING DIAGRAM
I-324	INSTRUMENTATION BLOWER I/O PANEL NO.4 RACK 4 WIRING DIAGRAM
I-325	INSTRUMENTATION BLOWER I/O PANEL NO.4 RACK 4 WIRING DIAGRAM
I-326	INSTRUMENTATION BLOWER I/O PANEL NO.4 RACK 4 WIRING DIAGRAM
I-327	INSTRUMENTATION BLOWER I/O PANEL NO.5 RACK 5 WIRING DIAGRAM
I-328	INSTRUMENTATION BLOWER I/O PANEL NO.5 RACK 5 WIRING DIAGRAM
I-329	INSTRUMENTATION BLOWER I/O PANEL NO.5 RACK 5 WIRING DIAGRAM
I-330	INSTRUMENTATION BLOWER I/O PANEL NO.5 RACK 5 WIRING DIAGRAM
I-331	INSTRUMENTATION BLOWER I/O PANEL NO.5 RACK 5 WIRING DIAGRAM
I-332	INSTRUMENTATION FCP NO.1 LAYOUT, WIRING DIAGRAM
I-333	INSTRUMENTATION FCP NO.2 LAYOUT, WIRING DIAGRAM
I-334	INSTRUMENTATION FCP NO.3 LAYOUT, WIRING DIAGRAM
I-400	INSTRUMENTATION DETAILS
I-401	INSTRUMENTATION DETAILS

TETRA TECH
www.tetratech.com
401 SOUTH WASHINGTON SQUARE, SUITE 100
LANSING, MI, 48933
PHONE: 517.316.3930, FAX: 517.484.8140

MARK	DATE	DESCRIPTION	BY
	5/29/20	ISSUED FOR BIDS	

CITY OF FLINT, MICHIGAN
FLINT WPC AERATION SYSTEM IMPROVEMENTS
SHEET INDEX

PROJ:	200-156238-19001
DESN:	BGB
DRWN:	ADL
CHKD:	MAT

G-001

Copyright: Tetra Tech

Bar Measures 1 inch, otherwise drawing not to scale

5/28/2020 6:55:17 AM - \\TT.LOCAL\IER\PROJECTS\LANSING\IER\156238\200-156238-19001\CAD\SHEETFILES\G-001 SHEET INDEX.DWG - LORTZ, JASON

GENERAL NOTES (ALL DRAWINGS)

1. COORDINATE DEMOLITION WORK WITH THE REQUIREMENTS LISTED IN SECTION 01110 OF PROJECT MANUAL.

2. SITE INVESTIGATION PRIOR TO BIDS IS STRONGLY RECOMMENDED TO DETERMINE THE COMPLETE EXTENTS OF DEMOLITION REQUIRED. THESE DRAWINGS DO NOT INDICATE ALL MATERIALS THAT ARE TO BE REMOVED OR REROUTED IN AREA OF PROPOSED WORK.

3. THESE GENERAL NOTES PRESENT AND/OR SUMMARIZE KEY PROJECT INFORMATION FOR THE DRAWINGS. FOR ADDITIONAL INFORMATION REFER TO DRAWING NOTES AND PROJECT SPECIFICATIONS FOR FURTHER DETAILS AND REQUIREMENTS

4. ALL GENERAL NOTES APPLY TO THE SCOPE OF THIS TOTAL PROJECT, REGARDLESS OF WHETHER OR NOT THEY ARE KEYED ON EVERY SHEET TO A SPECIFIC DETAIL.

5. ALL PIPING SHOWN AS BEING DEMOLISHED SHALL BE COMPLETELY REMOVED INCLUDING INSULATION, HANGERS, EXPANSION AND ANCHOR BOLTS AND PIPE SUPPORTS. PIPES TO BE DEMOLISHED THAT GO OUT OF THE WORK AREA ARE TO BE CAPPED AT THE WALL, FLOOR, OR CEILING. CAP ALL PIPES LEFT IN PLACE WITHIN 24 HOURS OF PIPE REMOVAL UNLESS DIRECTED OTHERWISE BY ENGINEER.

6. ALL EQUIPMENT SHOWN AS BEING DEMOLISHED SHALL BE COMPLETELY REMOVED INCLUDING EQUIPMENT PADS, ANCHORS, SUPPORTS, ELECTRICAL CONDUIT AND WIRE.

7. EXPANSION AND ANCHOR BOLTS REMAINING IN WALL, CEILINGS OR FLOORS SHALL BE POUNDED OR CUT FLUSH WITH SURFACE. IN FINISHED AREAS THEY SHALL BE RECESSED AND PATCHED TO MATCH EXISTING FINISH.

8. ALL OPENINGS REMAINING IN FLOORS, WALLS, OR CEILINGS, INCLUDING SLEEVES, AFTER PIPING AND DUCT DEMOLITION SHALL BE PATCHED TO MATCHING EXISTING FINISH AND AS DETAILED ON DRAWINGS. PENETRATION IN CHANNELS AND TANK WALLS ARE TO BE PATCHED AND SEALED WATER TIGHT. PENETRATIONS BETWEEN AREAS LABELED NEMA 4 AND NEMA 7 SHALL BE SEALED AIR TIGHT.

9. CAP AND BLIND FLANGE MATERIAL TO BE SAME AS PIPE BEING CAPPED.

10. THERE IS THE POSSIBILITY OF ASBESTOS IN THE EXISTING PIPE GASKET MATERIAL. CONTRACTOR IS RESPONSIBLE TO PROPERLY REMOVE OF THE MATERIAL IF IS ENCOUNTERED. CONTRACTOR SHALL FOLLOW ALL HANDLING AND DISPOSAL REGULATIONS.
11. FIELD REVIEW WITH ENGINEER AND OWNER PRIOR TO WORK WHICH PIPING AND CONDUIT ARE TO BE REMOVED.

12. ALL EXISTING DIMENSIONS SHOWN WITH THE (+/-) SYMBOL ARE APPROXIMATE AND SHALL BE FIELD VERIFIED BY THE CONTRACTOR BEFORE FABRICATION AND CONSTRUCTION.

13. THE INTENT OF THE DRAWINGS IS THAT THE CONTRACTOR SHALL FURNISH ALL LABOR, MATERIALS, TOOLS, EQUIPMENT AND TRANSPORTATION NECESSARY FOR THE PROPER EXECUTION OF THE WORK IN ACCORDANCE WITH THE CONTRACT DOCUMENTS AND ALL INCIDENTAL WORK NECESSARY TO COMPLETE THE PROJECT IN AN ACCEPTABLE MANNER, READY FOR USE BY THE OWNER.

14. THE CONTRACTOR SHALL REVIEW AND COORDINATE THE SCHEDULING OF ALL CONSTRUCTION WITH THE OWNER AND SUBMIT DETAILED CONSTRUCTION SCHEDULE PRIOR TO BEGINNING WORK.

15. THE GENERAL CONTRACTOR SHALL ENSURE THAT ALL CONSTRUCTION MEETS OR EXCEEDS APPLICABLE CODES AND STANDARD PRACTICES, INCLUDING ALL FEDERAL, STATE AND LOCAL BUILDING AND ACCESSIBILITY REQUIREMENTS AND REGULATIONS. THE CONTRACTOR SHALL BE RESPONSIBLE FOR ANY VIOLATION OF THE SAME AND SHALL MAKE ALL WORK ACCEPTABLE TO THE AUTHORITY HAVING JURISDICTION INVOLVED WITHOUT EXTRA CHARGE.

16. EACH TRADE SHALL VERIFY ALL REQUIREMENTS PERTAINING TO WORK PERFORMED IN THE PROJECT AND ANY REQUIRED PERMITS. ALL SUBCONTRACTORS SHALL DIRECT QUESTIONS, CHANGES OR REQUESTS THROUGH THE GENERAL CONTRACTOR. THE GENERAL CONTRACTOR SHALL SUBMIT ALL REQUESTS, CHANGES OR QUESTIONS TO THE OWNER'S REPRESENTATIVE IN WRITING.

17. THE CONTRACTOR IS RESPONSIBLE FOR APPLYING FOR ALL FEDERAL, STATE, AND LOCAL PERMITS AND CODE REVIEW. OWNER WILL PAY FOR COST OF CITY BUILDING, ELECTRICAL AND MECHANICAL PERMITS.

18. THE CONTRACTOR SHALL MEET ALL OCCUPATIONAL SAFETY AND HEALTH STANDARDS (OSHA), PART 1910 AND EQUIVALENT MIOSHA STANDARDS.

GENERAL NOTES, CONT.

19 PRIOR TO STARTING WORK THE DEMOLITION CONTRACTOR IS TO FIELD VERIFY NOTED AREAS OF DEMOLITION TO DETERMINE ACTUAL SCOPE OF DEMOLITION, AND TO REVIEW SCOPE WITH THE OWNER'S REPRESENTATIVE TO CONFIRM SPECIFIC ITEMS TO BE SALVAGED AND STORED FOR REUSE.

20 PRIOR TO THE START OF ANY DEMOLITION WORK, COORDINATE WITH PLANT OPERATORS THE LOCATION OF ALL UTILITIES. PLANT LOCK OUT/TAG OUT PROCEDURES SHALL BE STRICTLY FOLLOWED.

21 CONTRACTOR TO PROVIDE ANY AND ALL NECESSARY FENCES, BARRICADES, OR TRAFFIC CONTROLS TO ENSURE VEHICLE AND PERSONNEL SAFETY AND ADEQUATELY PROTECT THE SITE AT ALL TIMES.

22. PROVIDE ADEQUATE PROTECTION TO PREVENT DAMAGE TO ADJACENT STRUCTURES.

23. CONTRACTOR SHALL COORDINATE WITH OWNER AND ENGINEER ALL RELOCATE AND REROUTING OF EQUIPMENT, PIPING, CONDUIT, ETC.

24. PROMPTLY PATCH AND REPAIR DAMAGE CAUSED TO ADJACENT BUILDING ELEMENTS BY DEMOLITION WORK. RESTORE EXPOSED FINISHES OF PATCHED AREAS IN A MANNER THAT ELIMINATES EVIDENCE OF PATCHING AND REFINISHING.

25. MEASURES SHALL BE TAKEN TO PREVENT DEMOLISHED MATERIAL, TOOLS, ETC FROM FALLING INTO THE TANKS, WETWELLS, AND CHANNELS.

26. OWNER RESERVES RIGHT TO RETAIN ANY EQUIPMENT OR MATERIALS REMOVED UNDER THIS CONTRACT. CONTRACTOR IS REPONSIBLE TO HAUL AND DISPOSE OF OFFSITE ALL REMAINING REMOVED EQUIPMENT, MATERIAL, PIPING, CONDUIT, SOILS AND DEBRIS, NOT RETAINED BY OWNER, IN ACCORDANCE WITH ALL APPLICABLE CODES, LAWS, AND ORDINANCES.

27. CONTRACTOR IS RESPONSIBLE TO PROVIDE AND MAINTAIN SHORING, BRACING, OR STRUCTURAL SUPPORT TO PRESERVE STABILITY AND PREVENT MOVEMENT, SETTLEMENT, OR COLLAPSE OF ITEMS TO BE SELECTIVELY DEMOLISHED OR STABILIZED AND ITEMS WHICH ARE IMMEDIATELY ADJACENT TO THOSE BEING REMOVED. CONTRACTOR SHALL HIRE A LICENSED STRUCTURAL ENGINEER TO PROPERLY DESIGN ANY SHORING OR TEMPORARY SUPPORTS THAT MAY BE REQUIRED DURING THE DEMOLITION PHASE.

28. NO BURNING SHALL BE PERMITTED ON THIS PROJECT.

29. BLASTING IS PROHIBITED ON THIS PROJECT.

30. ALL HARDWARE TO BE 304 OR 316 STAINLESS STEEL INCLUDING NUTS, BOLTS, WASHER, ANCHORS, STRUTS, ETC. THIS NOTE HAS PRECEDENCE OVER ALL DRAWINGS, DETAILS, AND PROJECT MANUAL/SPECIFICATIONS.

TETRA TECH
www.tetratech.com
401 SOUTH WASHINGTON SQUARE, SUITE 100
LANSING, MI, 48933
PHONE: 517.316.3930, FAX: 517.484.8140

MARK	DATE	DESCRIPTION	BY
	5/29/20	ISSUED FOR BIDS	

CITY OF FLINT, MICHIGAN
FLINT WPC AERATION SYSTEM IMPROVEMENTS
GENERAL NOTES

PROJ:	200-156238-19001
DESN:	BGB
DRWN:	TJL
CHKD:	MAT

G-002

Copyright: Tetra Tech

5/27/2020 10:22:22 AM - \\TT.LOCAL\IER\PROJECTS\LANSING\IER\156238\200-156238-19001\CAD\SHEETFILES\G-002 NOTES.DWG - LORTZ, JASON

Bar Measures 1 inch, otherwise drawing not to scale

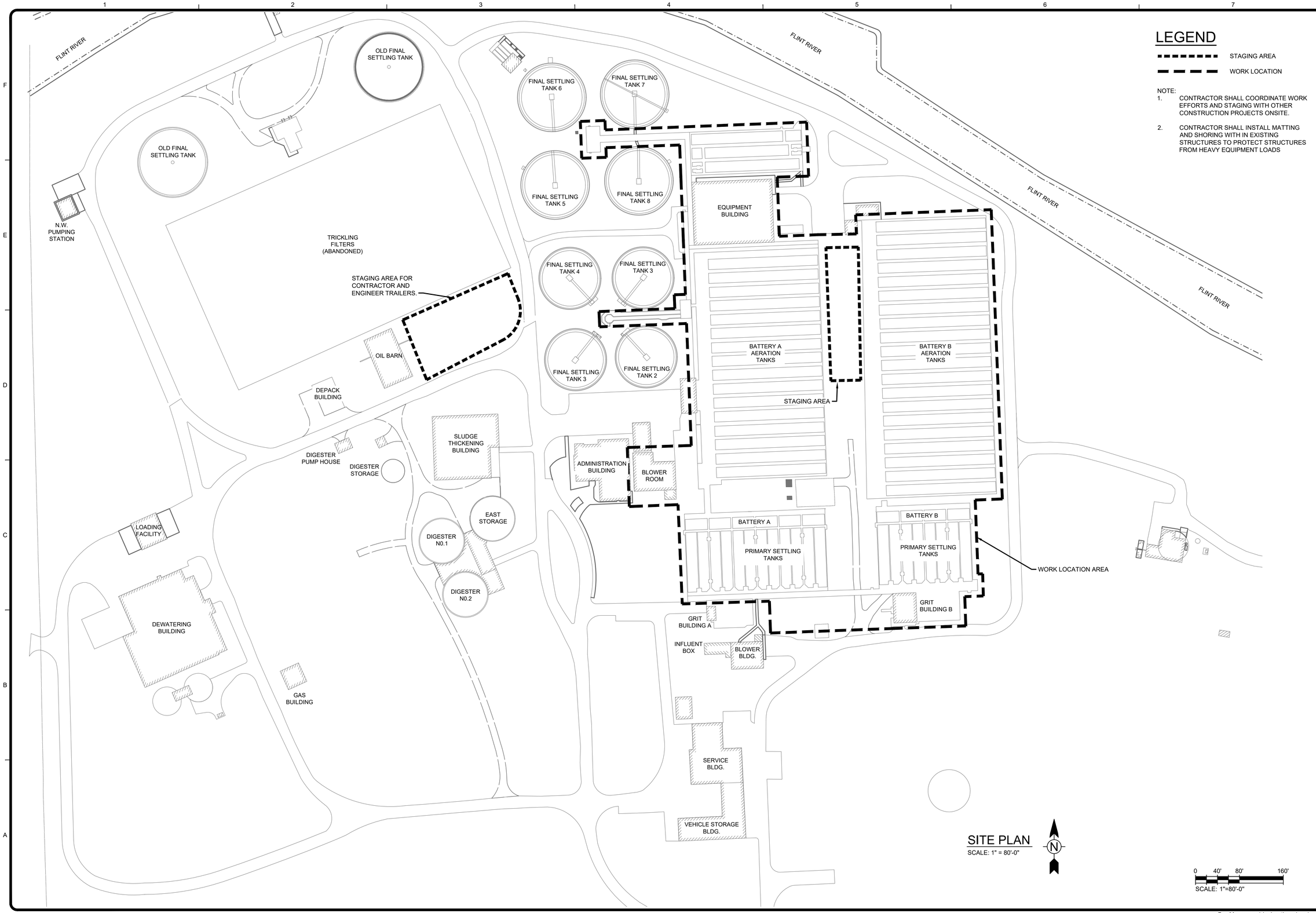

LEGEND

STAGING AREA

WORK LOCATION

NOTE:

1. CONTRACTOR SHALL COORDINATE WORK EFFORTS AND STAGING WITH OTHER CONSTRUCTION PROJECTS ONSITE.
2. CONTRACTOR SHALL INSTALL MATTING AND SHORING WITH IN EXISTING STRUCTURES TO PROTECT STRUCTURES FROM HEAVY EQUIPMENT LOADS

SITE PLAN

SCALE: 1" = 80'-0"

TETRA TECH
www.tetratech.com
401 SOUTH WASHINGTON SQUARE, SUITE 100
LANSING, MI. 48933
PHONE: 517.316.3930, FAX: 517.484.8140

MARK	DATE	DESCRIPTION	BY
	5/29/20	ISSUED FOR BIDS	

CITY OF FLINT, MICHIGAN

FLINT WPC AERATION SYSTEM IMPROVEMENTS

OVERALL SITE PLAN

PROJ:	200-156238-19001
DESN:	BGB
DRWN:	TJL
CHKD:	MAT

G-100

Copyright: Tetra Tech

Bar Measures 1 inch, otherwise drawing not to scale

5/27/2020 10:23:24 AM - \\TT.LOCAL\IER\PROJECTS\LANSING\IER\156238\200-156238-19001\CAD\SHEETFILES\G-100 SITE PLAN.DWG - LORTZ, JASON

BACKGROUND PLAN AND ONE LINE SYMBOLS

SYMBOL	DESCRIPTION
	CONTROL SWITCH (SEL. OR P.B.) SEE CIRCUITS FOR SPECIFIC TYPE
F FL	SEE CIRCUITS FOR SPECIFIC TYPE FLOAT SWITCH - FLOW SWITCH
T M	TEMPERATURE - HUMIDISTAT SWITCH (SUBSCRIPT=NO. OF STAGES)
L P V	LIMIT (PROXIMITY TYPE) PRESSURE - VACUUM SWITCH
ALT	ELECTRICAL OR MECHANICAL ALTERNATOR (SEE WIRING)
OS	OVERLOAD SWITCH OR DEVICE
TB	TERMINAL BOX
S	SOLENOID VALVE
PC	PHOTOCELL LINE VOLTAGE
	AS NOTED (LIGHTING PANEL, CONTROL PANEL, DISTRIBUTION PANEL, ETC.) WALL MOUNTED
JB	JUNCTION BOX
	TRANSFORMER
	CONDUIT WITH CONDUIT SEAL FITTING
	CONDUIT EXPOSED
	CONDUIT CONCEALED
E	DIRECT BURIED CONDUIT
UG	DIRECT BURIED CABLE
OH	OVERHEAD LINE
DB	UNDERGROUND DUCT BANK
EDB	EXISTING UNDERGROUND DUCT BANK
1 2 3 4 5 6	CONCRETE ENCASED DUCT BANK WITH CABLE LOCATIONS, AND SPARE DUCTS AS INDICATED ON DRAWINGS
	CABLE REEL
L L L L	MULTI-STACK ALARM LIGHTS
	SELECTOR SWITCH / PUSHBUTTON. FUNCTIONS AS SHOWN IN WIRING DIAGRAMS
	LOW VOLTAGE DISCONNECT SWITCH
	LOW VOLTAGE FUSE (BELOW 600V)
	HIGH VOLTAGE FUSE (ABOVE 600V)
1 RV, 2 FVR, 3 2S,2W	ALL STARTERS SHALL BE FULL VOLTAGE, NON-REVERSING UNLESS OTHERWISE INDICATED. (FVR) FULL VOLTAGE REVERSING (RV) REDUCED VOLTAGE (2S, 2W) TWO SPEED, TWO WINDING
	600V, 3 POLE MOLDED CASE CIRCUIT BREAKER, FRAME & RATING AS SHOWN
1 2 A-3	SINGLE PHASE, FRACTIONAL HP MOTOR TO LOCATION INDICATED (SEE NOTE 2 ON STANDARD NOTE SHEET)
86	DEVICE SYMBOL WITH TYPE DEVICE
A 1	THREE PHASE LOAD WITH IDENTIFICATION

SYMBOL	DESCRIPTION
FT 10	TAG NO. (BALLOON) FOR DEVICE INDICATED
FT 10, A-3, MCP OR CP-1	FOR POWER (SEE NOTE 2 ON STANDARD NOTE SHEET) 3/4"C(2/C#18SH) CONDUIT AND WIRE RUN FROM DEVICE INDICATED TO LOCATION INDICATED
	CAPACITOR, 3 PHASE, SIZE AS INDICATED
F C	DISCONNECT SWITCH (F) = FUSED, (C) = CIRCUIT BREAKER
	MAGNETIC STARTER (BACKGROUND DRAWINGS ONLY)
SIZE 2	COMBINATION MAGNETIC STARTER FUSED UNLESS NOTED (CIRCUIT BREAKER)
LC	COMBINATION LIGHTING CONTACTOR WITH HAND-OFF-AUTO SWITCH
R	MANUAL STARTER (R) = REVERSING
CP	CONTROL PANEL
1/8 UH-19	UNIT HEATER, 1/8 HORSEPOWER
	LIGHTING ARRESTOR
A-3	LOW VOLTAGE HOME RUNS 120/208V, 120/240V (SEE NOTE 2 ON STANDARD NOTE SHEET)
NEMA 4	WATERTIGHT
NEMA 4X	WATERTIGHT AND CORROSION PROOF
NEMA 7	EXPLOSION PROOF - CLASS I, DIVISION 1, GROUP D
NEMA 9	EXPLOSION PROOF - CLASS II, DIVISION 1
K	KEYLOCK
SD	SMOKE DETECTOR
E	EXIT LIGHT
	FLUORESCENT LUMINAIRE
	INCANDESCENT LUMINAIRE
	HIGH INTENSITY DISCHARGE LIGHT
EM	EMERGENCY BATTERY PACK
DS	DESK INTERCOM SET
	CAMERA
PTZ	DOME CAMERA (PAN, TILT, ZOOM)
52	DRAW OUT CIRCUIT BREAKER (ABOVE 600 VOLT)
	CIRCUIT BREAKER WITH STAB CONNECTION
(3) 50/5	CURRENT TRANSFORMER, AND RATIO (WITH NUMBER REQUIRED SHOWN)

WIRING DEVICE SCHEDULE

SYMBOL	DESCRIPTION	NEMA TYPE
	125V, 2P, DUPLEX, 3W	5-20 R
	SIMPLEX RECEPTACLE	
	QUAD RECEPTACLE	
	20A, 120/277V SWITCH	SPST

CONTROL CIRCUIT & PILOT DEVICE LEGEND

SYMBOL	DESCRIPTION
	PRESSURE ACTUATED SWITCH
	FLOW ACTUATED SWITCH
	LIMIT SWITCH - NORMALLY OPEN
	LIMIT SWITCH - NORMALLY CLOSED - HELD OPEN
	LATCHING CABLE SWITCH
	MOMENTARY PUSHBUTTON OPERATOR-NORMALLY CLOSED
	MOMENTARY PUSHBUTTON OPERATOR-NORMALLY OPEN
	CONTROL RELAY CONTACT - NORMALLY OPEN
INST.	TIMING RELAY INSTANTANEOUS CONTACT
CR	CONTROL RELAY COIL
CR L, CR U	TWO COIL LATCHING RELAY
	TIMED CLOSED CONTACT ON ENERGIZATION
	TIMED OPEN CONTACT ON DE-ENERGIZATION
	ZERO SPEED OR ANTI-PLUGGING SWITCH
	MAINTAINED STOP-START PUSHBUTTON OPERATOR
	MAINTAINED PUSH - PULL OPERATOR
	LOCAL TERMINALS WITH EXTERNAL WIRING
T	TIMING RELAY COIL
T 1	TIMING RELAY COIL (OFF DELAY)
G	INDICATING LIGHT
	PUSH-TO-TEST INDICATING LIGHT
X1 X2	SECONDARY TRANSFORMER
	MOLDED CASE CIRCUIT BREAKER
	GENERAL DISCONNECT SWITCH

SYMBOL	DESCRIPTION
	SELECTOR SWITCH - NORMALLY OPEN
	FLOAT ACTUATED SWITCH
	TEMP. ACTUATED SWITCH
	LIMIT SWITCH - NORMALLY CLOSED
	LIMIT SWITCH - NORMALLY OPEN - HELD CLOSED
	TIME DELAY FUSE
	PUSHBUTTON OPERATOR WITH MUSHROOM HEAD
(F)	FIELD LOCATED STOP BUTTON
	CONTROL RELAY CONTACT - NORMALLY CLOSED
INST.	TIMING RELAY INSTANTANEOUS CONTACT
O H C	SELECTOR SWITCH OPERATOR WITH FUNCTION SHOWN
	TIMED OPEN CONTACT ON ENERGIZATION
	TIMED CLOSED CONTACT ON DE-ENERGIZATION
R 1	PUSH-TO-TEST INDICATING LIGHT
	MAINTAINED STOP - MOMENTARY START PUSHBUTTON (JOG)
	SOLENOID OR CLUTCH
ETI	ELAPSED TIME INDICATOR
X1 X2	120VAC TRANSFORMER
	PUSHBUTTON OPERATOR WITH MUSHROOM HEAD
	THERMAL OVERLOAD
(F)	FIELD LOCATED
	TERMINAL POINT
	TERMINAL
	LOW VOLTAGE FUSE
	FUSIBLE TERMINAL BLOCK
	CONTROL POWER TRANSFORMER
	RECEPTACLE

NOTE: THE PLC I/O ADDRESS SHALL BE USED AS THE WIRING TAG SCHEME FOR ALL PANEL AND FIELD CONTROL WIRING. COORDINATE WITH ELECTRICAL CONTRACTOR.

I.S.A. STANDARD LETTER FUNCTIONS

SYMBOL	FIRST LETTER	SUCCEEDING LETTERS
A	ANALYSIS, ANALOG	ALARM
B	BURNER, FLAME	BATCH
C	CONDUCTIVITY, COMMAND	CONTROL (FEEDBACK TYPE)
D	DENSITY, SPECIFIC GRAVITY	
E	VOLTAGE	PRIMARY ELEMENT
F	FLOW RATE	RATIO
G	GAGING	GLASS
H	HAND, MANUAL	HIGH
I	CURRENT	INDICATE
J	POWER	SCAN
K	TIME, TIME SCHEDULE	CONTROL (NO FEEDBACK)
L	LEVEL, LIGHT	LOW
M	MOISTURE, HUMIDITY	MIDDLE, MODULATE
N		
O	OVERLOAD	ORIFICE
P	PRESSURE, VACUUM	POINT
Q	QUANTITY	TOTALIZE, INTEGRATE
R	RADIOACTIVITY	RECORD, PRINT, RECEIVE
S	SPEED, FREQUENCY, SOLENOID	SWITCH
T	TEMPERATURE, TURBIDITY	TRANSMIT, TRANSFORM
U	MULTIVARIABLE	MULTIFUNCTION
V	VIBRATION, VISCOSITY	VALVE, DAMPER, LOUVER
W	WEIGHT, FORCE	
X		
Y		RELAY, COMPUTE
Z	POSITION	DRIVE, ACTUATE

PROTECTIVE RELAY LEGEND

DEVICE NO.	DESCRIPTION
2	SYNC. TIMER 0-5 MIN.
25	SYNCHRONIZING
27	SHORT TIME UNDERVOLTAGE
32	REVERSE POWER RELAY
38	TEMPERATURE
40	LOSS OF EXCITATION
43	SELECTOR SWITCH
47	PHASE SEQUENCE & UNDERVOLTAGE
49	THERMAL
50/51	INSTANTANEOUS AND VERY INVERSE
51	VERY INVERSE
51G	INVERSE GROUND FAULT
51N	NEUTRAL OVERCURRENT
51V	OVERCURRENT RELAY WITH VOLTAGE RESTRAINT
52/CS	CONTROL SWITCH
59	INSTANTANEOUS OVERVOLTAGE
60	VOLTAGE BALANCE
62	TIME DELAY
64	SHORT TIME LOW PICK UP OVERVOLTAGE
67	DIRECTIONAL OVERCURRENT
69	LOCKOUT CONTROL SWITCH
78	OUT OF STEP
81	OVER/UNDER FREQUENCY RELAY
83	MULTI-CONTACT AUXILIARY
86/HR	MULTI-CONTACT AUX. HAND RESET
87	DIFFERENTIAL OVERCURRENT

SYMBOL LEGEND

SYMBOL	DESCRIPTION	SYMBOL	DESCRIPTION
PT	POTENTIAL TRANSFORMER	W	WATTMETER
CT	CURRENT TRANSFORMER	AP	ALARM POINT
A	AMMETER	CPT	CONTROL POWER TRANSFORMER
V	VOLTMETER	(2) (3)	NUMBER OF DEVICES REQUIRED
PF	POWER FACTOR METER	ETI	ELAPSED TIME METER

TETRA TECH
www.tetratech.com
401 SOUTH WASHINGTON SQUARE, SUITE 100
LANSING, MI. 48933
PHONE: 517.316.3930, FAX: 517.484.8140

MARK	DATE	DESCRIPTION	BY
	5/29/20	ISSUED FOR BIDS	

CITY OF FLINT, MICHIGAN
FLINT WPC AERATION SYSTEM IMPROVEMENTS
ELECTRICAL LEGEND

PROJ:	200-156238-19001
DESN:	GCJ
DRWN:	JLS
CHKD:	WAP

E-001

Copyright: Tetra Tech

Bar Measures 1 inch, otherwise drawing not to scale

5/21/2020 10:26:32 AM - \\TTS073FS1\PROJECTS\IER\156238\200-156238-19001\CAD\SHEETFILES\IER-001_E-LEG.DWG - SHANK, JASON

NOTES:

1. FIELD VERIFY CONDUIT ROUTING AT THE PLANT PRIOR TO BIDS. CORE HOLES AS REQUIRED TO SUIT INSTALLATION OF THE CONDUITS SHOWN. PATCH WITH NON-SHRINK GROUT.
2. TURN OVER TO OWNER AT PROJECT COMPLETION OPERATION AND MAINTENANCE MANUALS (QUANTITY AS SPECIFIED) TO OWNER.
3. IN ADDITION TO PATCH CABLES SUPPLIED FOR THE PROJECT, FURNISH 30-10FT LONG SINGLEMODE DUPLEX FIBER OPTIC PATCH CABLES (ST-ST) CONNECTORS, AND 30-10FT CAT-5E PATCH CABLES FOR OWNERS USE. TURN OVER CABLES TO OWNER.
4. MULTIMODE FIBER OPTIC PATCH CABLES, AND ETHERNET PATCH CABLES SUPPLIED IN THE PROJECT SHALL BE COLORED PURPLE.
5. FIBER OPTIC PATCH PANELS SHALL BE THE PRODUCT OF CORNING CABLE SYSTEMS. (RACK OR SURFACE MOUNTED AS SHOWN", ST STYLE CONNECTORS, WITH QUANTITY OF BULKHEADS AS SHOWN.

GENERAL CONSTRUCTION NOTES:

1. ELECTRICAL MATERIALS AND EQUIPMENT ITEMS SHOWN IN LIGHT LINE WEIGHTS ON THE DRAWINGS ARE EXISTING ITEMS TO REMAIN. ELECTRICAL MATERIALS AND EQUIPMENT ITEMS SHOWN IN HEAVY LINE WEIGHTS ARE NEW THIS CONTRACT.
2. ITEMS SHOWN OR NOTED TO BE DEMOLISHED ON THE DRAWINGS ARE EXISTING ITEMS TO BE REMOVED FROM SITE BY CONTRACTOR UNLESS NOTED TO BE TURNED OVER TO OWNER.
3. FOR ITEMS INDICATED AS "FIELD LOCATE", THE CONTRACTOR SHALL FIELD VERIFY FOR INTERFERENCE AND FOR LOCATIONS OF MOUNTING FLANGES, CONNECTION POINTS, ETC.
4. CONDUIT ROUTINGS SHOWN ON BACKGROUND PLANS ARE INTENDED ROUTINGS ONLY. EXACT CONDUIT ROUTINGS FOR CONDUITS, AND LENGTH SHALL BE FIELD LOCATED AND VERIFIED BY THE CONTRACTOR. COORDINATE CONDUIT ROUTING IN FINISHED AREAS WITH OWNER. CONDUIT TO BE CONCEALED IN THESE AREAS.
5. REFER TO THE CABLE MANUFACTURER'S RECOMMENDATIONS FOR MINIMUM BEND RADIUS FOR FIBER OPTIC CABLES. INSTALL NEW PULL BOXES (PB) AS REQUIRED FOR CONDUITS. SIZE PULL BOXES AS REQUIRED PER FIBER OPTIC CABLE MANUFACTURERS RECOMMENDATIONS.
6. CONDUITS/RACEWAYS, PULL BOXES AND JUNCTION BOXES TO BE INSTALLED WITH 316 STAINLESS STEEL CHANNEL STRUT. MINIMUM STRUT LENGTH TO BE 12 INCHES, WHERE POSSIBLE.
7. PANELS SHALL BE MOUNTED OFF WALLS WITH STRUT, CONDUITS SHALL BE MOUNTED ON STRUT INCLUDING SINGLE RUNS.
8. REPAIR SIDEWALKS AND ROADWAYS DUE TO SITE WORK ADDITIONS, THE EXTENT OF THE REPAIR REQUIRED SHALL BE FIELD VERIFIED PRIOR TO BIDS IN CONJUNCTION WITH THE WORK SHOWN IN THE CONTRACT DOCUMENTS. PRIOR TO TRENCHING, FIELD LOCATE EXISTING GAS LINES, TELEPHONE LINES, SPRINKLER LINES, ETC. COORDINATE WITH OWNER
9. PULL CORDS SHALL BE INSTALLED IN CONDUITS CONTAINING NETWORK CABLES, AND FIBER OPTIC CABLES.
10. CORE HOLES AS REQUIRED TO SUIT INSTALLATION OF CONDUIT AND WIRING/CABLING AS SHOWN. FIELD VERIFY EXACT EXTENT OF WORK REQUIRED.
11. FURNISH PULL BOXES FOR FIBER OPTIC CABLE. COORDINATE EXACT BENDING RADIUS WITH MANUFACTURER.
12. NEW CONDUITS INSTALLED THIS CONTRACT WITH FIBER OPTIC CABLES ARE TO BE LABELED WITH PHENOLIC TAGS (AT BEGINNING TO END) TO INDICATE THE NUMBER OF STRANDS, ORIGINATION AND DESTINATION. TAGS TO BE COLOR CODED ORANGE FOR MULTIMODE.
13. WHERE NEW CONDUITS SHOWN TO BE INSTALLED PASS UNDER ROADWAYS, CONDUITS SHALL BE CONCRETE ENCASED.
14. PRIOR TO EXCAVATION, FIELD LOCATE EXISTING UTILITIES. COORDINATE WITH OWNER.
15. AREAS WHERE CAMERAS ARE SHOWN TO BE INSTALLED SHALL BE CLASSIFIED AS NEMA 4, UNLESS CALLED OUT OTHERWISE.
16. THE ASSOCIATED INSTRUMENTATION DRAWINGS SHOW EXISTING WIRES AND TERMINAL NUMBERS REQUIRED TO PROPERLY INTERFACE WITH NEW EQUIPMENT. THIS INFORMATION WAS COLLECTED FROM AS-BUILT DRAWINGS AND EXTENSIVE FIELD VERIFICATION. THE INFORMATION SHALL BE USED AS A GUIDE IN RE-TERMINATION. IT SHALL REMAIN THE CONTRACTOR'S RESPONSIBILITY TO EXAMINE THE WIRING AND TO REVISE TO SUIT AS REQUIRED. CHANGES IN THE CONTRACT OR COST WILL NOT BE GRANTED FOR THIS COORDINATION. IT IS THE CONTRACTOR'S RESPONSIBILITY TO EXAMINE PROPOSED WORK SHOWN.
17. CONDUIT ROUTINGS SHOWN ON BACKGROUND PLANS ARE PROPOSED ROUTINGS ONLY. EXACT CONDUIT ROUTINGS AND LENGTH SHALL BE FIELD LOCATED AND VERIFIED BY THE CONTRACTOR. COORDINATE CONDUIT ROUTING IN FINISHED AREAS WITH OWNER. CONDUIT TO BE CONCEALED IN THESE AREAS.
18. RACEWAYS, PULL BOXES AND JUNCTION BOXES TO BE INSTALLED WITH 316 STAINLESS STEEL FASTENERS SUPPORTS, AND THREADED ROD, ETC. (CHANNEL STRUT TO ALSO BE STAINLESS STEEL). MINIMUM STRUT LENGTH TO BE 12 INCHES, WHERE POSSIBLE. TYPICAL FOR NEMA 12, 4, AND 7 AREAS.
19. WIRING FOR STARTERS SHALL BE IN ACCORDANCE WITH NEMA CLASS II B STANDARDS. SUBMIT ENGINEERED SHOP DRAWINGS FOR ALL STARTERS SHOWN TO BE WIRED.
20. WIRE NUMBERS (1, 3, 5, ETC.) SHALL BE PREFIXED WITH STARTER TAG NUMBERS. THE WIRE NUMBER AFTER THE PREFIX SHALL BE THE MANUFACTURER'S WIRE NUMBERING SYSTEM. WIRE MARKERS SHALL BE USED AT EACH WIRE TERMINATION POINT.
21. IN AREAS WHERE EQUIPMENT AND CONDUIT IS REMOVED, REPAIR WALL AND FLOOR SURFACES AS REQUIRED TO MATCH SURROUNDING AREA. WHERE DEVICES ARE REMOVED FROM CONCEALED BOXES, FURNISH AND INSTALL A BLANK COVER ON THE BOX.
22. FIBER OPTIC CABLE SHALL BE AS CALLED OUT ON SYSTEM CONFIGURATION DRAWINGS, MULTI MODE, ALL DIELECTRIC, SUITABLE FOR INSTALLATION UNDERGROUND IN WET CONDUIT.

GENERAL NOTES:

1. PRIOR TO SUBMITTING A BID FOR THE WORK DETAILED UNDER THIS CONTRACT, BIDDER SHALL VISIT THE FLINT WASTEWATER TREATMENT PLANT. THE BIDDER SHALL FULLY ACQUAINT ONESELF WITH EXISTING FIELD CONDITIONS AT EACH SITE. NO BULLETINS WILL BE WRITTEN FOR WORK DUE TO LACK OF VERIFICATION OF EXISTING SITE CONDITIONS AND WIRING.
2. NO WIRES SHALL BE TERMINATED TO TERMINAL STRIPS, OR OTHER EQUIPMENT WITHOUT FIRST VERIFYING SIGNAL TYPE. DAMAGES RESULTING FROM LACK OF VERIFICATION SHALL BE BORNE BY THE CONTRACTOR. CONTRACTOR SHALL COORDINATE SIGNAL TYPE AND VOLTAGE WITH I/O CARDS SHOWN.
3. WITHIN CONTROL PANELS, NAMEPLATES SHALL BE PROVIDED TO INDICATE DIFFERENT VOLTAGE LEVELS WITHIN PANELS. ALSO, A NAME TAG (YELLOW BACKGROUND, RED LETTERING) SHALL BE LOCATED ON THE FRONT OF EVERY PANEL INDICATING THAT WHEN MAIN PANEL IS DISCONNECTED 120V IS STILL PRESENT FROM FIELD DEVICES (YELLOW WIRING/ISOLATED INPUT CARDS.)
4. PHENOLIC TAGS ON FACE OF CONTROL PANELS TO HAVE WHITE BACKGROUND AND BLACK LETTERING (EXCEPT WARNING TAGS; YELLOW BACKGROUND RED LETTERING).
5. PROVIDE SAFETY COVERS ON ALL 480V MOLDED CASE MAIN CIRCUIT BREAKERS TO INSULATE THE INCOMING CABLES AND SIDE CONDUCTORS FROM CONTACT. (TYP. FOR CONTROL PANELS.) PROVIDE BREAKER LOCKS FOR PUMP CIRCUIT BREAKERS (MCP)AND MAIN PANEL BREAKERS.
6. REFER TO WIRING DIAGRAMS FOR ADDITIONAL INFORMATION ON ISOLATED I/O. A COMMON NEUTRAL MAY BE USED FOR SEVERAL ISOLATED INPUTS FROM THE SAME STARTER. PROVIDE NEUTRAL JUMPERS WIRES WITHIN THE PANEL AS REQUIRED.
7. ELECTRICAL MATERIALS AND EQUIPMENT ITEMS SHOWN IN LIGHT LINE WEIGHTS ON THE DRAWINGS ARE EXISTING ITEMS TO REMAIN. ELECTRICAL MATERIALS AND EQUIPMENT ITEMS SHOWN IN HEAVY LINE WEIGHTS ARE NEW THIS CONTRACT.
8. ITEMS SHOWN CROSSHATCHED (OR NOTED TO BE DEMOLISHED) ON THE DRAWINGS ARE EXISTING ITEMS TO BE REMOVED, FROM SITE BY CONTRACTOR.
9. INSTALL A SINGLE CONDUCTOR INSULATED (RHW, THWN, OR XHHW) COPPER GROUND WIRE IN EACH CONDUIT, SIZE AS SHOWN ON DRAWINGS, OR AS A MINIMUM PER THE NATIONAL ELECTRICAL CODE. THIS GROUND WIRE SHALL BE CONNECTED AT EACH END TO THE EQUIPMENT GROUND. THIS ALSO INCLUDES INSTRUMENTATION DEVICES SUCH AS LEVEL, PRESSURE, FLOW TRANSMITTERS, LIMIT SWITCHES, CONDUITS, NETWORK AND I/O CABLES.
10. THE FOLLOWING EXAMPLE COMPONENT IDENTIFICATION SHALL BE USED AS APPROPRIATE:

(F) FIELD MOUNTED, NOT AT STARTER OR OTHER CONTROL PANELS
(S) STARTER PANEL MOUNTED
(MCP)AT MAIN CONTROL PANEL
(1) AT CONTROL PANEL NO.1
(2) AT CONTROL PANEL NO.2
(TCP) AT TEMPERATURE CONTROL PANEL

11. REFER TO DETAIL SHEETS. CONTRACTOR SHALL FURNISH AND INSTALL HARDWARE AND APPURTENANCES (I.E. PIPE TAPS, WETWELL BUBBLER TUBES, VALVES, COPPER TUBING, BALL VALVES, PNEUMATIC PIPING, SPOOL PIECES, ETC.) FOR FIELD DEVICES SHOWN (FLOWMETERS, PRESSURE TRANSMITTERS, LEVEL TRANSMITTERS, ETC.). WORK SHALL BE COORDINATED WITH OTHER TRADES (MECHANICAL INSTRUMENTATION, ETC.) CONTRACTOR SHALL BE RESPONSIBLE FOR SYSTEM COORDINATION AND INSTALLATION.
12. ETHERNET AND FIBER OPTIC TERMINATIONS SHALL BE PERFORMED BY A QUALIFIED REPRESENTATIVE OF CABLE MANUFACTURER, THE CABLES SHALL BE TESTED. NO SPLICING SHALL BE PERMITTED OF FIBER OPTIC CABLES, BETWEEN PANELS. FIBERS SHALL BE TERMINATED AT PATCH PANELS, INCLUDING SPARES.
13. REFER TO THE CABLE MANUFACTURER'S RECOMMENDATIONS FOR MINIMUM BEND RADIUS FOR FIBER OPTIC CABLES. INSTALL NEW PULL BOXES (PB) AS REQUIRED FOR CONDUITS. SIZE PULLBOXES AS REQUIRED PER FIBER OPTIC CABLE MANUFACTURERS RECOMMENDATIONS..
14. CABLES (INCLUDING FIBER, ETHERNET, CONTROL WIRE, ETC.) WHERE PASSING THROUGH A PULLBOX SHALL BE LABELED AND COMPLETELY IDENTIFIED WITH IDENTIFICATION NUMBERS AND ORIGINATION/DESTINATION. THIS ALSO INCLUDES ALL CABLE BUNDLES ENTERING CONTROL PANELS, PULLBOXES, ETC.
15. CONTROL WIRES SHALL BE TAGGED WITH THE PLC I/O ADDRESS, AND A DESCRIPTIVE ADDRESS IN THE FIELD AND AT THE PANEL. REFER TO INSTRUMENTATION DRAWINGS, CONTROL PANEL WIRING DIAGRAMS. (TYP.)
16. THE FIELD DEVICES SHOWN ON THE P&ID'S, ELECTRICAL BACKGROUNDS, AND DETAILS SHEETS MAKEUP THE FIELD DEVICE EQUIPMENT REQUIREMENTS. NOT ALL FIELD DEVICES REQUIRED ARE SHOWN ON THE P&ID'S.
17. UPS SELECTED SHALL BE COMPATIBLE WITH ISOLATION TRANSFORMERS. (TYP.)
18. REFER TO I/O DRAWING LAYOUT FOR ADDITIONAL SIGNALS NOT SHOWN ON P&ID FLOW DIAGRAMS.
19. FURNISH, AND INSTALL PHENOLIC NAMETAGS ON THE EXTERIOR OF CONDUITS CONTAINING E-FO, F.O., E-NET CABLES. NAMETAGS TO BE INSTALLED ON EACH CONDUIT AT EACH END, BETWEEN ENCLOSURES ORANGE BACKGROUND, WHITE LETTERING. FOR MULTIMODE FIBER, YELLOW BACKGROUND, WHITE LETTERING, SINGLE MODE FIBER. EXAMPLE: "24 - E-FO - BPP TO BIOP-4".
20. CONTROL WIRING TO BE YELLOW COLOR. (TYP.)
21. CONDUITS IN NEMA 4 AREAS INDOORS TO BE ALUMINUM, OR PVC COATED RGS.
22. WIRES FOR SEPARATELY DERIVED POWER SOURCES TO BE ORANGE. COORDINATE WITH OWNER.
23. ENCLOSURES, PULL BOXES, JUNCTION BOXES, SHALL BE 316 STAINLESS STEEL.

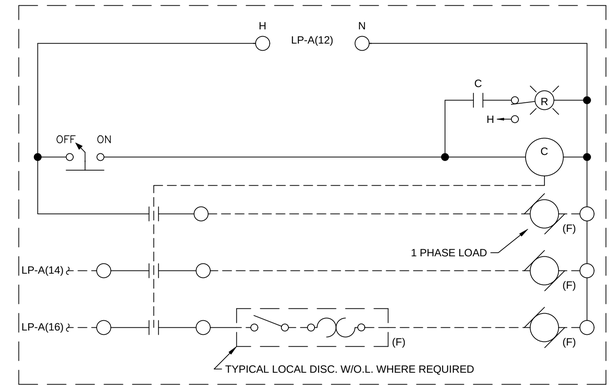

TYPICAL 120V 3 POLE CONTACTOR

(EXAMPLE CIRCUIT)

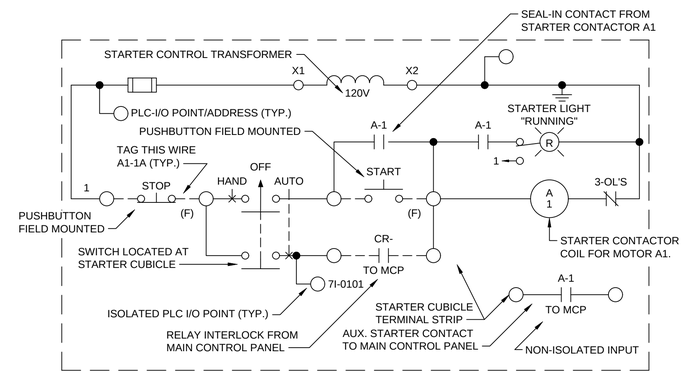

A 1 EXAMPLE PUMP — STARTER NAMEPLATE

(TAG A1)
(EXAMPLE CIRCUIT)

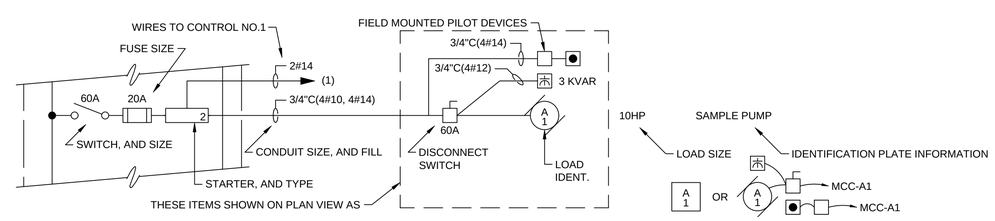

MCC LEGEND EXAMPLE

TETRA TECH
www.tetratech.com
401 SOUTH WASHINGTON SQUARE, SUITE 100
LANSING, MI, 48933
PHONE: 517.316.3930, FAX: 517.484.8140

MARK	DATE	DESCRIPTION	BY
	5/29/20	ISSUED FOR BIDS	

CITY OF FLINT, MICHIGAN
FLINT WPC AERATION SYSTEM IMPROVEMENTS
ELECTRICAL NOTES

PROJ:	200-156238-19001
DESN:	GCJ
DRWN:	JLS
CHKD:	WAP

E-002

Copyright: Tetra Tech

Bar Measures 1 inch, otherwise drawing not to scale

5/24/2020 10:30:32 AM - \\TTSV073FS1□ROJECTS\IER\156238\200-156238-19001\CAD\SHEETFILES\E\E-002_E-NOTES.DWG - SHANK, JASON

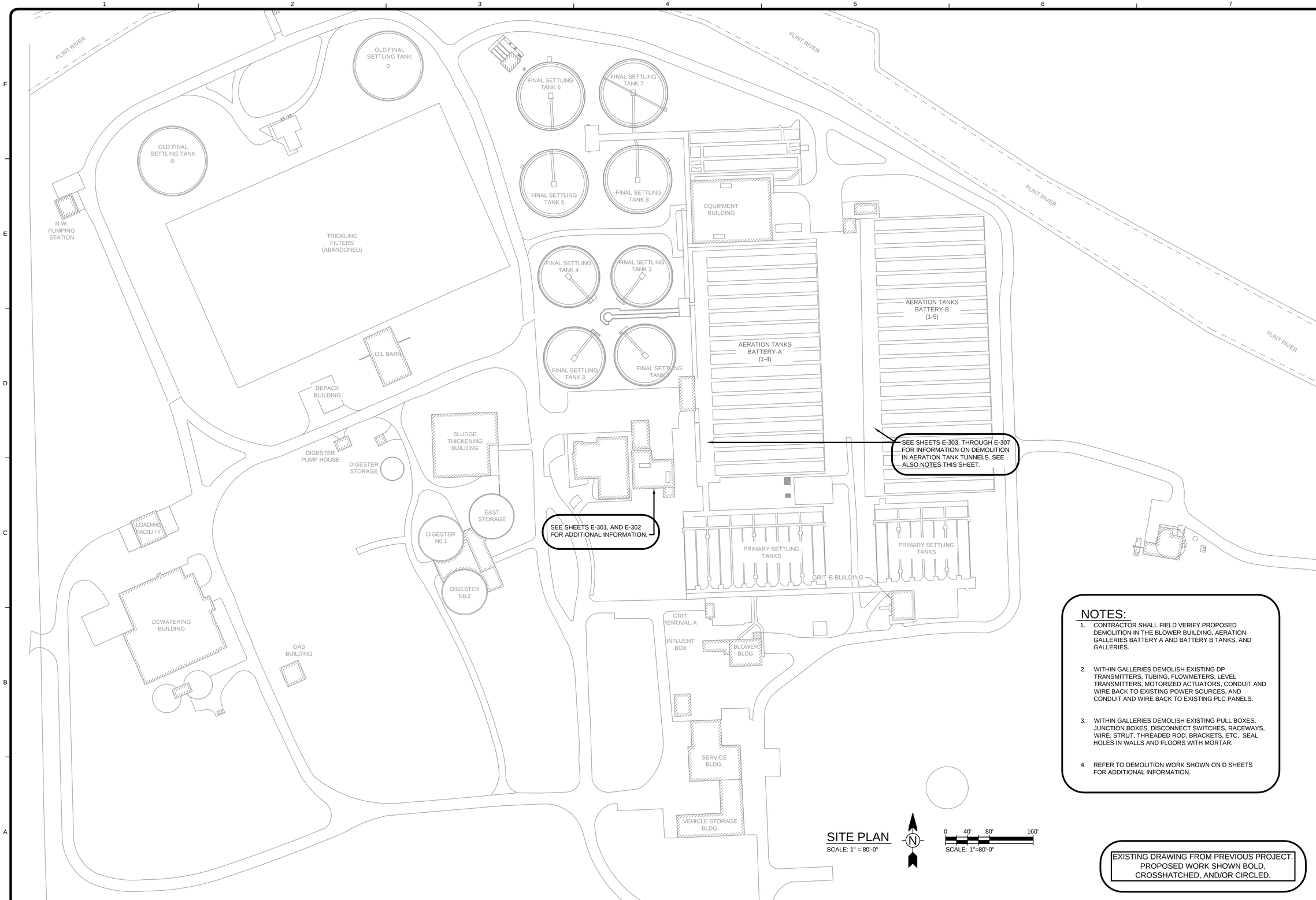

SITE PLAN
SCALE: 1" = 80'-0"

NOTES:

1. CONTRACTOR SHALL FIELD VERIFY PROPOSED DEMOLITION IN THE BLOWER BUILDING, AERATION GALLERIES BATTERY A AND BATTERY B TANKS, AND GALLERIES.
2. WITHIN GALLERIES DEMOLISH EXISTING DP TRANSMITTERS, TUBING, FLOWMETERS, LEVEL TRANSMITTERS, MOTORIZED ACTUATORS, CONDUIT AND WIRE BACK TO EXISTING POWER SOURCES, AND CONDUIT AND WIRE BACK TO EXISTING PLC PANELS.
3. WITHIN GALLERIES DEMOLISH EXISTING PULL BOXES, JUNCTION BOXES, DISCONNECT SWITCHES, RACEWAYS, WIRE. STRUT, THREADED ROD, BRACKETS, ETC. SEAL HOLES IN WALLS AND FLOORS WITH MORTAR.
4. REFER TO DEMOLITION WORK SHOWN ON D SHEETS FOR ADDITIONAL INFORMATION.

EXISTING DRAWING FROM PREVIOUS PROJECT. PROPOSED WORK SHOWN BOLD, CROSSHATCHED, AND/OR CIRCLED.

TETRA TECH
www.tetratech.com
401 SOUTH WASHINGTON SQUARE, SUITE 100
LANSING, MI. 48933
PHONE: 517.316.3930, FAX: 517.484.8140

MARK	DATE	DESCRIPTION	BY
	5/29/20	ISSUED FOR BIDS	

CITY OF FLINT, MICHIGAN
FLINT WPC AERATION SYSTEM IMPROVEMENTS
ELECTRICAL
EXISTING SITE PLAN DEMOLITION

PROJ:	200-156238-19001
DESN:	GCJ
DRWN:	JLS
CHKD:	WAP

E-003

Copyright: Tetra Tech

Bar Measures 1 inch, otherwise drawing not to scale

5/24/2020 10:37:47 AM - \\TTSV73FS1□ROJECTS\ER\156238\200-156238-19001\CAD\SHEETFILES\E\E-003_EXISTING SITE PLAN_DEMO.DWG - SHANK, JASON

NOTES:

1. CONDUITS SHALL BE TAGGED WITH PHENOLIC TAGS AT BEGINNING AND END WITH FIBER OPTIC CABLES. TAGS SHALL BE ORANGE COLORED FOR MULTIMODE FIBER WITH WHITE LETTERING. TAGS SHALL STATE ORIGINATION, DESTINATION, AND NUMBER OF FIBER STRANDS.
2. POWER AND CONTROL CONDUITS SHALL BE TAGGED WITH PHENOLIC TAGS AT BEGINNING, END, AND IN BETWEEN. TAGS SHALL ALSO BE INSTALLED AT PULL BOXES, JUNCTION BOXES ETC. TAGS SHALL BE WHITE BACKGROUND, BLACK LETTERING AND INDICATE 480V POWER, 120V POWER, SIGNAL, CONTROL, SHIELDED CABLES WITH SPECIFIC CIRCUIT IDENTIFICATION. SEE ELECTRICAL AND INSTRUMENTATION DETAIL SHEETS FOR ADDITIONAL REQUIREMENTS AND INFORMATION.
3. INSTALL NEW GROUND MAT AS SHOWN. INSTALL BARE 4/O IN 1 INCH PVC SCHEDULE 40 CONDUIT TO THE EQUIPMENT LOCATIONS SHOWN. DIRECT BURY CONDUITS TO BLOWER ROOM. RUN CONDUITS ON EXTERIOR WALL. INSTALL EXPOSED ON WALL WITHIN BLOWER ROOM. ROUTE TO AVOID OVERHEAD CRANE. CORE HOLES AS REQUIRED. SEAL WITH NON-SHRINK GROUT.
4. FIELD VERIFY CONDUIT ROUTING TO THE VARIOUS OUTDOOR MINI-POWER ZONES, SLUICE GATE ACTUATORS, FIBER CONTROL PANELS, AND THE MIXING VALVE CONTROL STATIONS. FOR THE MIXING VALVE CONTROL STATIONS, CONDUIT ROUTING SHALL MATCH ROUTING OF AIR LINES SHOWN ON PROCESS DRAWINGS. WHERE CONDUITS EXIT TUNNEL AREAS, PENETRATE WALL ABOVE HIGH WATER LINE. SEAL PENETRATIONS WITH DOUBLE LINK SEAL, AND COVER BOTH SIDES OF LINK SEAL WITH MORTAR.
5. FOR NEW FIBER OPTIC CABLING SHOWN, INSTALL PULL BOXES AS REQUIRED. DO NOT EXCEED FIBER CABLE BEND RADIUS.
6. INSTALL CONDUIT EXPANSION FITTINGS ON CONDUITS THAT CROSS A STRUCTURAL EXPANSION JOINT.
7. CONTRACTOR TO INSTALL SEAL FITTINGS ON CONDUITS EXITING THE AERATION TANK AREA. (AREA 18' ABOVE TANKS, AND 10" OUT FROM TANKS IS CLASSIFIED CLASS 1, DIVISION I, GROUP C, AND GROUP D.

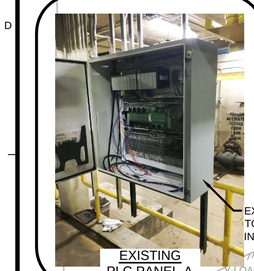

EXISTING PLC PANEL-A TO REMAIN. SHOWN FOR INFORMATION ONLY.

EXISTING PLC PANEL-A

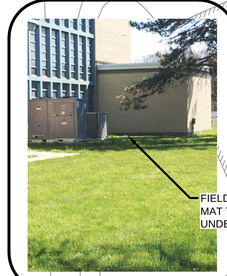

FIELD LOCATE, AND INSTALL NEW GROUND MAT THIS AREA. AVOID EXISTING UNDERGROUND INCOMING 5 KV SERVICES.

LOCATED OUTSIDE AT TANKS.
MPZ-G6
1"C(3#10)
BIOP-5
FCP-2
1"C(1 - 24-STRAND F.O. CABLE)

NOTE: SEE SHEET E-316 FOR OTHER MIXING CONTROL STATIONS TO BE INSTALLED.

SEE SHEET E-318, AND SHEET E-319 FOR ADDITIONAL WORK REQUIRED IN THE EQUIPMENT BUILDING.
MCC-P4W ADDITION
MIXING PROCESSOR PANEL
BIOP-5
MPZ-G (P4W-74)
EXISTING MCC-P4E
MCC-P4E ADDITION
P4W 77
MPZ-B
LOCATED IN TUNNEL
BIOP-2
MPZ-E (XP1-43) FIELD LOCATE OUTSIDE AT AERATION TANKS ON STRUT SUPPORT RACK.
EXISTING - PLC PANEL-A LOCATED IN TUNNEL.
EXISTING MCC-XP4 LOCATED IN PRE-AERATION BUILDING ELECTRICAL ROOM.
MPZ-A
BIOP-1
LOCATED IN TUNNEL
SEE NOTE NO.7. (TYP.)
EXISTING BLOWER CONTROL PANEL
NEW BPP
NEW MVUS NO.1
EXISTING MCC-XP1
EXISTING 5KV MAIN SWITCHGEAR-S2
FCP-1
MPZ-E1
1"C(3#10)
BPP
1"C(1 - 24-STRAND F.O. CABLE)
XP4 74
FIELD LOCATE, AND INSTALL NEW GROUND MAT THIS AREA.
MPZ-D
BIOP-4
LOCATED IN TUNNEL
MPZ-F (P4E-58) FIELD LOCATE OUTSIDE AT AERATION TANKS ON STRUT SUPPORT RACK.
EXISTING PLC PANEL-B LOCATED IN TUNNEL
MPZ-C
BIOP-3
LOCATED IN TUNNEL
MPZ-F10
1"C(3#10)
LOCATED OUTSIDE AT TANKS.
LOCATED OUTSIDE AT TANKS.
BIOP-5
FCP-3
1"C(1 - 24-STRAND F.O. CABLE)
P4W 85
FIELD LOCATE, AND ROUTE CONDUIT THROUGH TUNNEL SYSTEM FROM MIXING I/O PANEL TO MIXING PROCESSOR PANEL IN EQUIPMENT BUILDING.
EXISTING MCC-7 (LOWER LEVEL)
MPZ-H
EXISTING MCC-7 (UPPER LEVEL)
EXISTING MCC-7 (LOWER LEVEL)
1"C(1 - 12-STRAND F.O. CABLE) TO MIXING PROCESSOR PANEL IN EQUIPMENT BUILDING
MIXING I/O PANEL
SEE SHEET E-320 FOR ADDITIONAL INFORMATION IN THE GRIT REMOVAL-B BUILDING.
EXISTING GRIT BUILDING-A CONTROL PANEL.

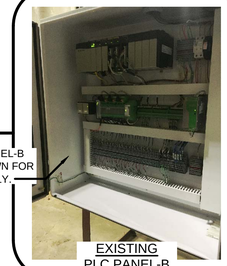

EXISTING PLC PANEL-B TO REMAIN. SHOWN FOR INFORMATION ONLY.

EXISTING PLC PANEL-B

1"C(3-2/C#16SH)
MIXING PROCESSOR PANEL
ROUTE CONDUIT TO GRIT BUILDING-B. SUPPORT OVERHEAD WITH STEEL SUPPORT POSTS BETWEEN BUILDING, AND TANKS. SECURE TO CONCRETE DECKING.
MIXING I/O PANEL
1 1/2"C(30#14)
1 1/2"C(30#14)
MIXING PROCESSOR PANEL
1"C(3#10)
MPZ-H2
PVC-RMC SEAL FITTING. (TYP.)
1"C(3-2/C#16SH)
MIXING I/O PANEL
MPZ-D15
1"C(3#10)
MIXING PROCESSOR PANEL
MIXING CONTROL STATIONS
1 1/2"C(30#14)
MIXING I/O PANEL
NOTE: SEE SHEET E-316 FOR OTHER MIXING CONTROL STATIONS TO BE INSTALLED.

NEW GROUND ROD (TYP.)
BARE 4/0 IN PVC (SCH 40) TO BLOWER NO.1. (TYP.)
BARE 4/0
TO BLOWER NO.2
TO NEW SWITCHGEAR MVUS NO.1 GROUND BUS
BARE 4/0
TO EXISTING MAIN SWITCHGEAR S2
INSTALL NEW GROUND MAT. SEE DETAIL SHEET FOR ADDITIONAL INFORMATION.
TO EXISTING MAIN SWITCHGEAR GROUND BUS
TO BLOWER NO.3

SITE PLAN
SCALE: 1" = 80'-0"

0 40' 80' 160'
SCALE: 1"=80'-0"

EXISTING DRAWING FROM PREVIOUS PROJECT. PROPOSED WORK SHOWN BOLD, CROSSHATCHED, AND/OR CIRCLED.

TETRA TECH
www.tetratech.com
401 SOUTH WASHINGTON SQUARE, SUITE 100
LANSING, MI. 48933
PHONE: 517.316.3930, FAX: 517.484.8140

MARK	DATE	DESCRIPTION
	5/29/20	ISSUED FOR BIDS

BY

CITY OF FLINT, MICHIGAN
FLINT WPC AERATION SYSTEM IMPROVEMENTS
ELECTRICAL
EXISTING SITE PLAN
LOCATION PLAN PROPOSED WORK

PROJ: 200-156238-19001
DESN: GCJ
DRWN: JLS
CHKD: WAP

E-004

Copyright: Tetra Tech

Bar Measures 1 inch, otherwise drawing not to scale

5/26/2020 9:13:55 PM - \\TTS073FS1\...ROJECTS\IER\156238\200-156238-19001\CAD\SHEETFILES\E\E-004_EXISTING SITE PLAN_PR.DWG - SHANK, JASON

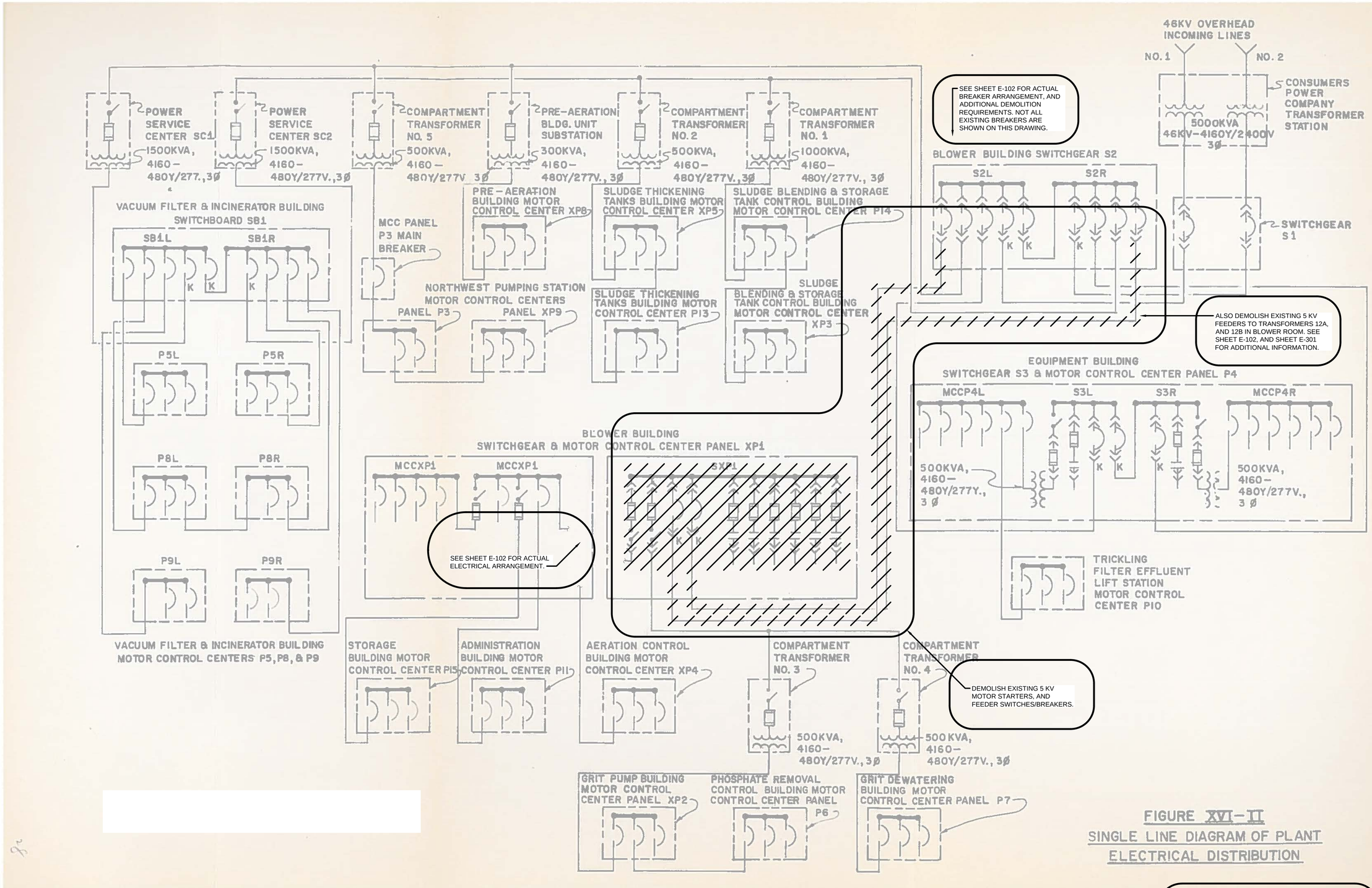

FIGURE XVI-II
SINGLE LINE DIAGRAM OF PLANT ELECTRICAL DISTRIBUTION

EXISTING DRAWING FROM PREVIOUS PROJECT. PROPOSED WORK SHOWN BOLD, CROSSHATCHED, AND/OR CIRCLED.

TETRA TECH
www.tetratech.com
401 SOUTH WASHINGTON SQUARE, SUITE 100
LANSING, MI. 48933
PHONE: 517.316.3930, FAX: 517.484.8140

MARK	DATE	DESCRIPTION	BY
	5/29/20	ISSUED FOR BIDS	

CITY OF FLINT, MICHIGAN
FLINT WPC AERATION SYSTEM IMPROVEMENTS
EXISTING PARTIAL POWER ONE-LINE DEMOLITION

PROJ:	200-156238-19001
DESN:	GCJ
DRWN:	JLS
CHKD:	WAP

E-100

Copyright: Tetra Tech

Bar Measures 1 inch, otherwise drawing not to scale

5/24/2020 11:07:36 AM - \\TTS073FS1.\PROJECTS\IER\156238\200-156238-19001\CAD\SHEETFILES\E\E-100_EX POWER ONELINE DEMO.DWG - SHANK, JASON

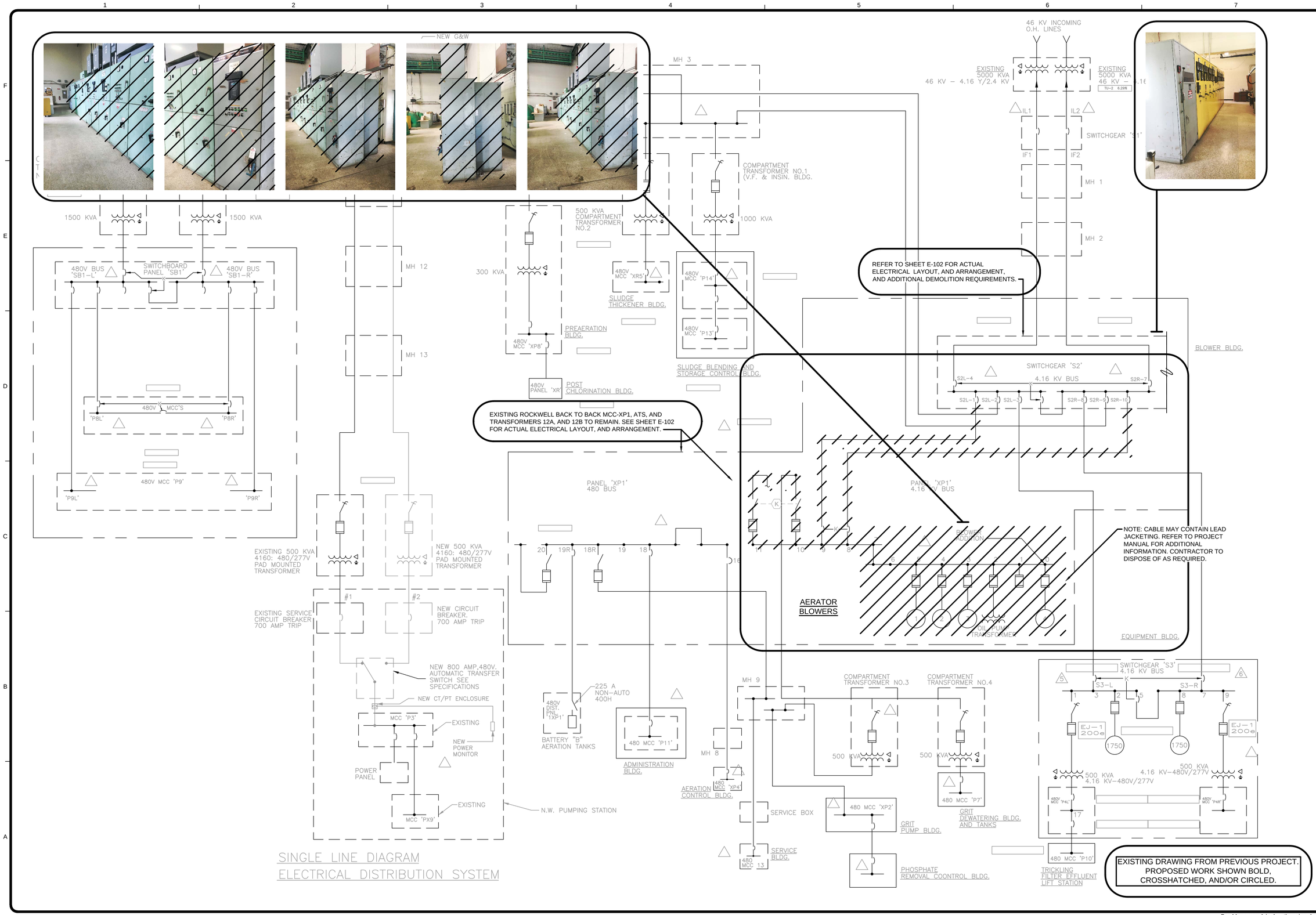

TETRA TECH
www.tetratech.com
401 SOUTH WASHINGTON SQUARE, SUITE 100
LANSING, MI. 48933
PHONE: 517.316.3930, FAX: 517.484.8140

MARK	DATE	DESCRIPTION	BY
	5/29/20	ISSUED FOR BIDS	

CITY OF FLINT, MICHIGAN
FLINT WPC AERATION SYSTEM IMPROVEMENTS
EXISTING PARTIAL POWER ONE-LINE DEMOLITION

PROJ:	200-156238-19001
DESN:	GCJ
DRWN:	JLS
CHKD:	WAP

E-101

Copyright: Tetra Tech

Bar Measures 1 inch, otherwise drawing not to scale

5/24/2020 11:14:41 AM - \\TTS073FS1\PROJECTS\IER\156238\200-156238-19001\CAD\SHEETFILES\E-101_EX POWER ONELINE DEMO_II.DWG - SHANK, JASON

NOTE:

1. THIS DRAWING IS FROM PREVIOUS COORDINATION STUDY. SEE PROJECT MANUAL FOR REQUIREMENTS TO UPDATE STUDY, CONTRACTOR SHALL TURN OVER TO OWNER AT PROJECT COMPLETION THE SKM RAW DATA FILES.
2. CONTRACTOR SHALL ADJUST EXISTING PROTECTIVE RELAYS, AND FUSE SIZE AT EXISTING MAIN SWITCHGEAR-S2 AS REQUIRED TO SUIT THE NEW MEDIUM VOLTAGE EQUIPMENT SHOWN.
3. ADJUST SETTINGS ON EXISTING BREAKERS PER COORDINATION STUDY TO ACCOMMODATE SWITCHGEAR.
4. INSTALL NEW 4"C(3#500 KCMIL, 8 KV RATED, 1#4/0) FROM FEEDER BREAKER NO.1, AND FROM FEEDER BREAKER NO.10 TO NEW MVUS NO.1. (MAIN NO.1, AND MAIN NO.2)
5. INSTALL NEW 4"C(3#500 KCMIL, 8 KV RATED, 1#4/0) FROM FEEDER BREAKER NO.11, AND FROM FEEDER SWITCH NO.0 TO EXISTING TRANSFORMER PRIMARY'S 12A, AND 12B LOCATED IN BLOWER ROOM.

CONTRACTOR SHALL READJUST THESE RELAYS BASED ON UPDATED COORDINATION STUDY, TO BE INCLUDED IN THIS CONTRACT. INSTALL NEW FUSES IN THIS FEEDER SWITCH PER UPDATED COORDINATION STUDY. TO BE COMPLETED IN THIS CONTRACT.

EXISTING SWITCHGEAR ID NUMBER. SEE PICTURES AT RIGHT FOR ADDITIONAL INFORMATION.

DEMOLISH EXISTING CONDUIT/WIRE. INSTALL NEW CONDUIT/WIRE AS SHOWN FOR THESE FOUR (4) CIRCUITS.

ADD NEW SECTIONS TO MCC-P4E, AND MCC-P4W. SEE SHEETS E-106, AND E-107 FOR ADDITIONAL INFORMATION.

DEMOLISH EXISTING SWITCHGEAR, STARTERS, BREAKERS, OIL PUMP TRANSFORMER, CONDUIT/WIRE, ETC.

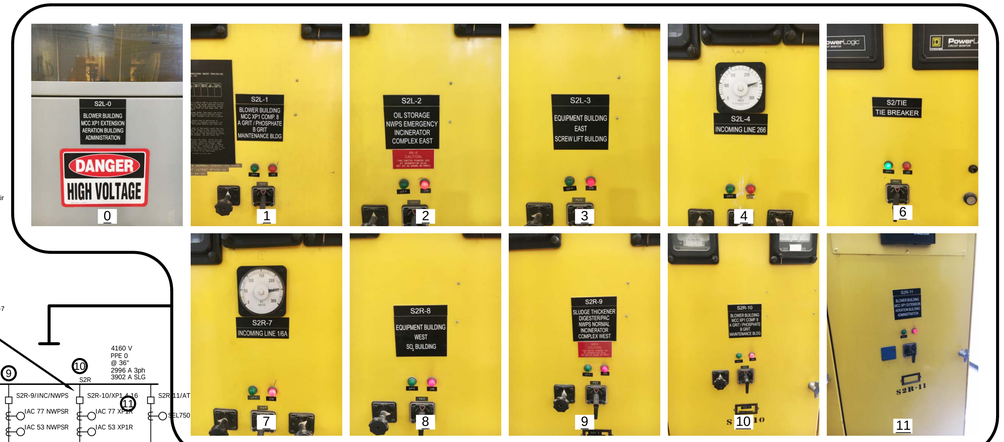

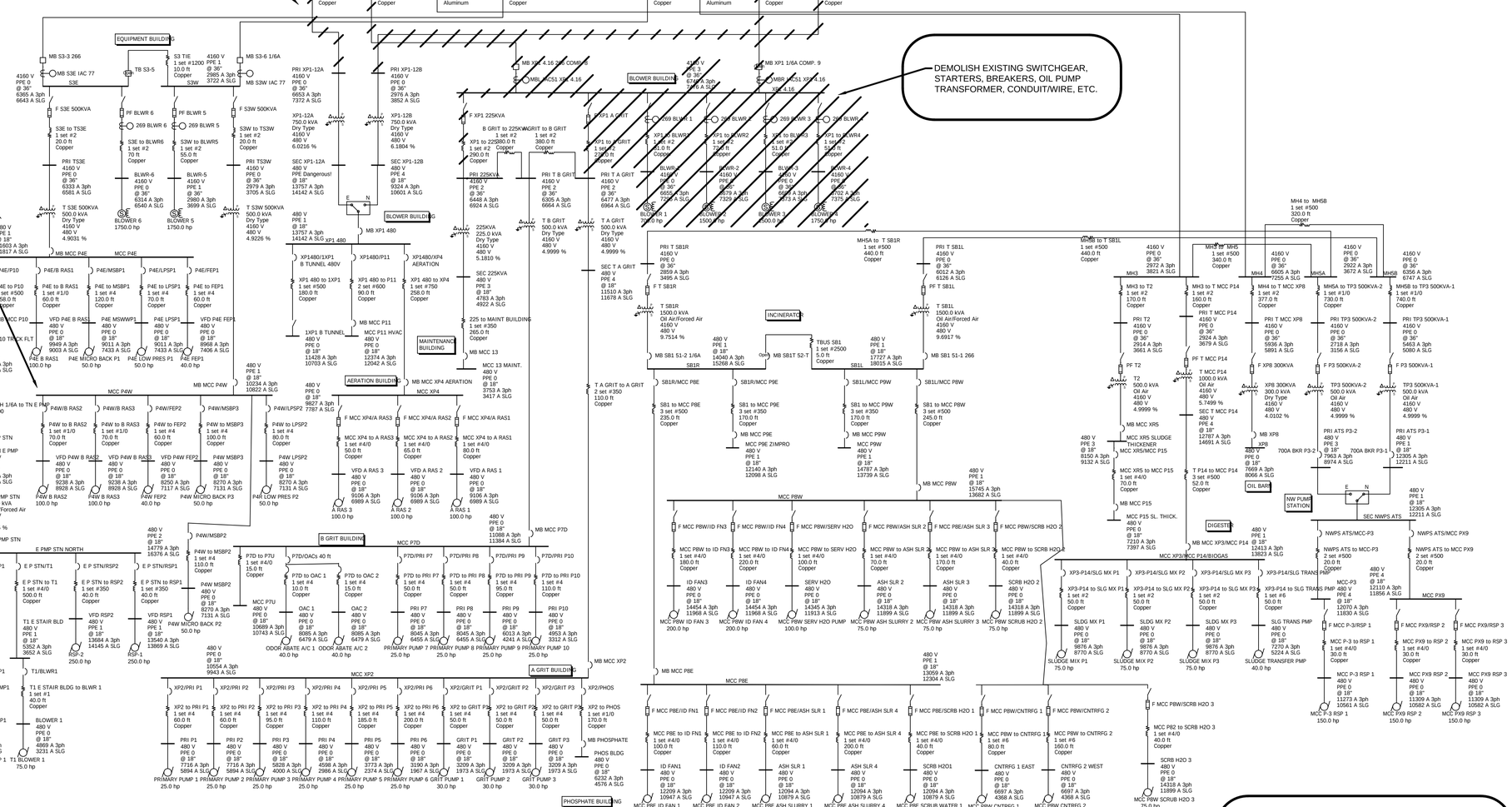
CES #1 266
46000 V
Isc 11.0 Amps
SLG 11.4 Amps
X/R 1.929
CES #2 1/6A
46000 V
Isc 62.8 Amps
SLG 62.8 Amps
X/R 12.600
EQUIPMENT BUILDING
BLOWER BUILDING
INCINERATOR
MAINTENANCE BUILDING
AERATION BUILDING
EAST PUMP STATION
B GRIT BUILDING
A GRIT BUILDING
PHOSPHATE BUILDING
OIL BARN
DIGESTER
NW PUMP STATION
MCC P4E
MCC P4W
MCC P7D
MCC XP2
MCC P8E
MCC P8W
MCC P9W
MCC XP3/MCC P14/BIOGAS
MCC P-3/P-3RSP 1
MCC P-3 to RSP 1
MCC P-3 RSP 1
MCC PX9/RSP 2
MCC PX9 to RSP 2
MCC PX9 RSP 2
MCC PX9/RSP 3
MCC PX9 to RSP 3
MCC PX9 RSP 3
MCC P1 HEADER PUMP 1
T1 BLOWER 1
T2 BLOWER 2
MCC P2 HEADER PUMP 2
MCC P2 to PMP2
MCC P2/PMP2
MCC E P1/PMP1
MCC E P1 to PMP1
HEADER PMP1
T1/BLWR1
T1 E STAIR BLDG to BLWR 1
T2/BLWR2
T2 E STAIR BLD to B2
BLOWER 2
HEADER PMP2
MCC E P1
MCC E P1 to P1
T1 E STAIR BLD
MCC EPS P2
MCC E P2
MCC E P2 to P2
T2 E STAIR BLDG
E P STN/RSP4
E P STN/RSP3
E P STN/T2
E P STN/MCC E P2
E P STN/MCC E P1
E P STN/T1
E P STN/RSP2
E P STN/RSP1
E P STN/T1 to T1
E P STN to P1
E P STN to P2
E P STN to T2
E P STN to RSP1
E P STN to RSP2
E P STN to RSP3
E P STN to RSP4
VFD RSP1
VFD RSP2
VFD RSP3
VFD RSP4
P4W MSBP2
P4W MSBP4
P4W MSBP1
P4W MSBP3
P4W MSBP2 BACK P2
P4W MICRO BACK P1
P4W MICRO BACK P3
P4W LOW PRES P2
P4W LOW PRES P1
P4E MICRO BACK P1
P4E LOW PRES P1
P4E LOW PRES P2
P4E FEP1
P4E FEP2
P4E LPSP1
P4E LPSP2
P4E MSBP1
P4E MSBP2
P4E MSWVP1
P4E P10
P4E P10 TRUCK FLT
P4E P10 TRUCK FLT
P4E P10 TRUCK FLT

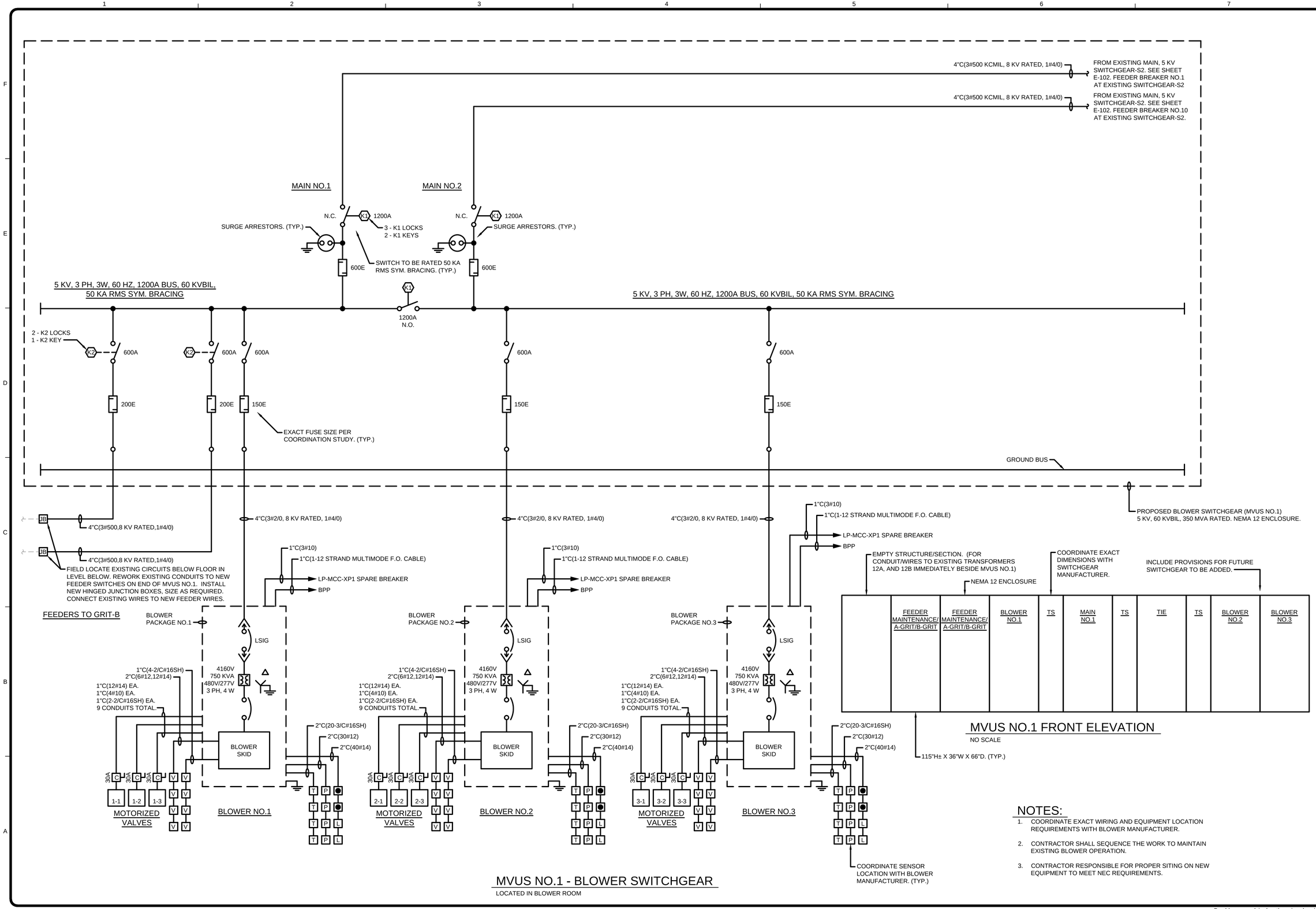

NOTES:

1. COORDINATE EXACT WIRING AND EQUIPMENT LOCATION REQUIREMENTS WITH BLOWER MANUFACTURER.
2. CONTRACTOR SHALL SEQUENCE THE WORK TO MAINTAIN EXISTING BLOWER OPERATION.
3. CONTRACTOR RESPONSIBLE FOR PROPER SITING ON NEW EQUIPMENT TO MEET NEC REQUIREMENTS.

TETRA TECH
www.tetratech.com
401 SOUTH WASHINGTON SQUARE, SUITE 100
LANSING, MI. 48933
PHONE: 517.316.3930, FAX: 517.484.8140

MARK	DATE	DESCRIPTION	BY
	5/29/20	ISSUED FOR BIDS	

CITY OF FLINT, MICHIGAN
FLINT WPC AERATION SYSTEM IMPROVEMENTS
5KV POWER ONE-LINE DIAGRAM

PROJ:	200-156238-19001
DESN:	GCJ
DRWN:	JLS
CHKD:	WAP

E-103

Copyright: Tetra Tech

Bar Measures 1 inch, otherwise drawing not to scale

5/26/2020 11:04:59 PM - \\TTSO73FS1□ROJECTS\IER\156238\200-156238-19001\CAD\SHEETFILES\E\E-103_POWER ONELINE PR.DWG - SHANK, JASON

NOTES:

1. CONTRACTOR SHALL OBTAIN THE SERVICES OF ROCKWELL - MCNAUGHTON/MCKAY TO FURNISH AND INSTALL NEW MOLDED CASE CIRCUIT BREAKERS WITHIN EXISTING MOTOR CONTROL CENTER XP1. FURNISH AND INSTALL NEW BREAKERS, DOORS, HANDLES FOR BREAKER OPERATION. INSTALL NEW NAMETAGS. BREAKERS TO HAVE MINIMUM SHORT CIRCUIT WITHSTAND RATING OF 85KA RMS SYM. BRACING.
2. OBTAIN THE SERVICES OF ROCKWELL-MCNAUGHT-MCKAY ELECTRIC TO FURNISH, INSTALL AND PROGRAM THE NEW MOLDED CASE CIRCUIT BREAKERS SHOWN. FURNISH DEVICENET CONNECTIONS, CABLES, TERMINATION RESISTORS, PLC PROGRAMMING AND PANELVIEW PROGRAMMING TO INTEGRATE THESE NEW BREAKERS INTO THE EXISTING ROCKWELL SMART MOTOR CONTROL CENTER(S).

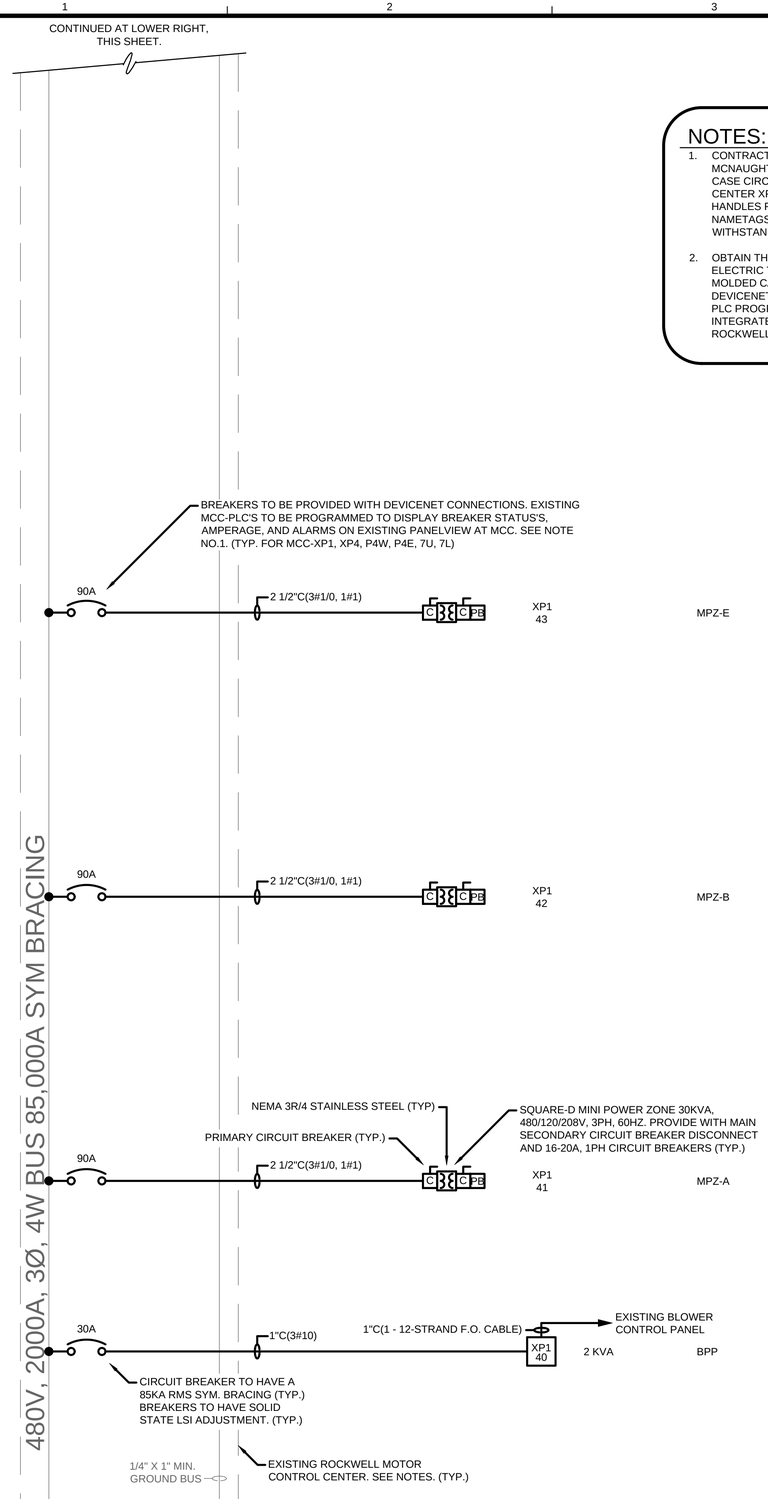

EXISTING MOTOR CONTROL CENTER NO.XP1
ONE-LINE DIAGRAM - PROPOSED WORK

LOCATED IN BLOWER BUILDING NEAR NEW MVUS NO.1

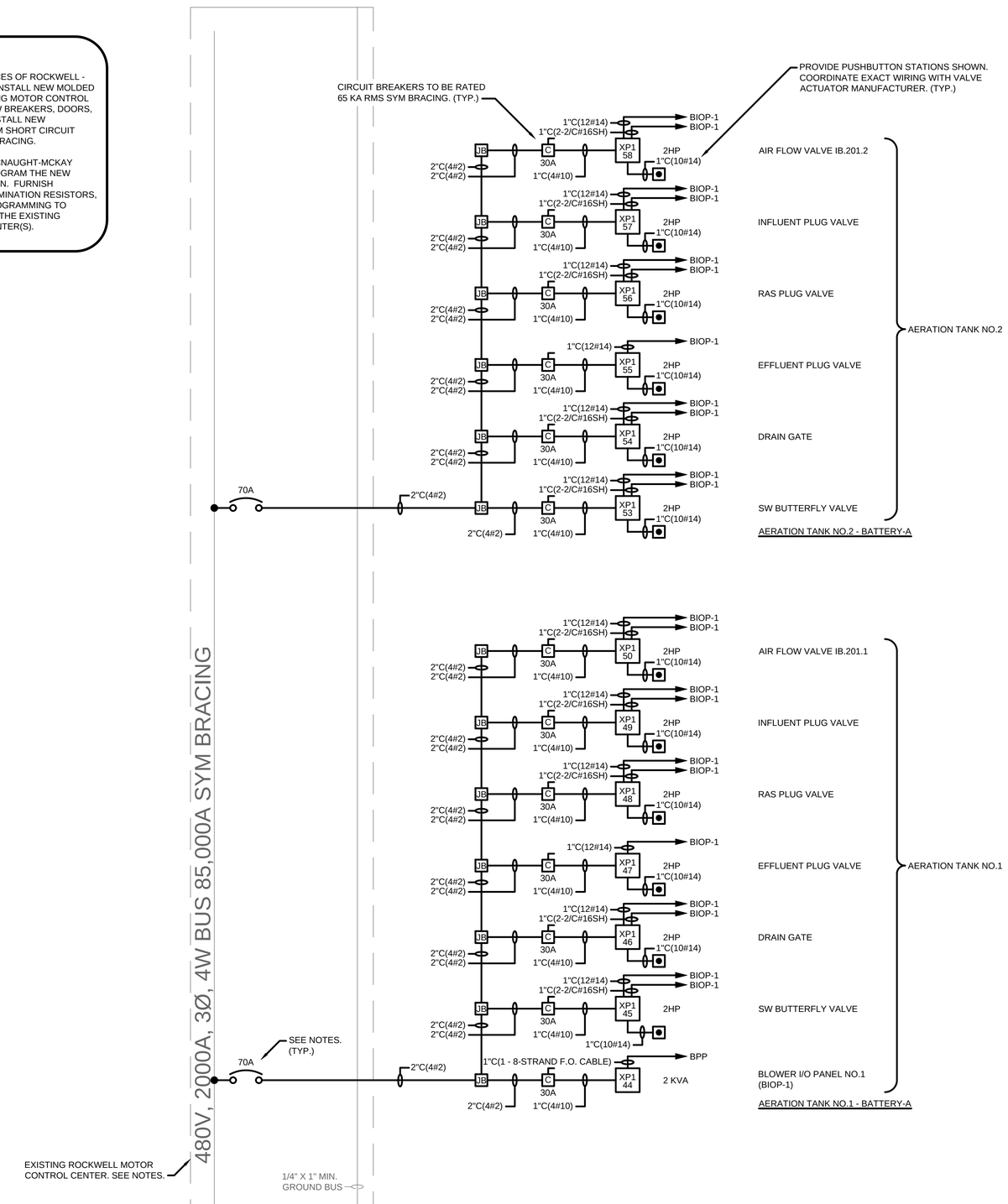

EXISTING MOTOR CONTROL CENTER NO.XP1
ONE-LINE DIAGRAM - PROPOSED WORK

LOCATED IN BLOWER BUILDING NEAR NEW MVUS NO.1

TETRA TECH
www.tetratech.com
401 SOUTH WASHINGTON SQUARE, SUITE 100
LANSING, MI. 48933
PHONE: 517.316.3930, FAX: 517.484.8140

MARK	DATE	DESCRIPTION	BY
	5/29/20	ISSUED FOR BIDS	

CITY OF FLINT, MICHIGAN
FLINT WPC AERATION SYSTEM IMPROVEMENTS
MOTOR CONTROL CENTER ONE-LINE PROPOSED WORK

PROJ:	200-156238-19001
DESN:	GCJ
DRWN:	JLS
CHKD:	WAP

E-104

Copyright: Tetra Tech

Bar Measures 1 inch, otherwise drawing not to scale

5/26/2020 9:44:03 PM - \\TTS073FS1\PROJECTS\IER\156238\200-156238-19001\CAD\SHEETFILES\IEE-104_MCC ONELINE PR_III.DWG - SHANK, JASON

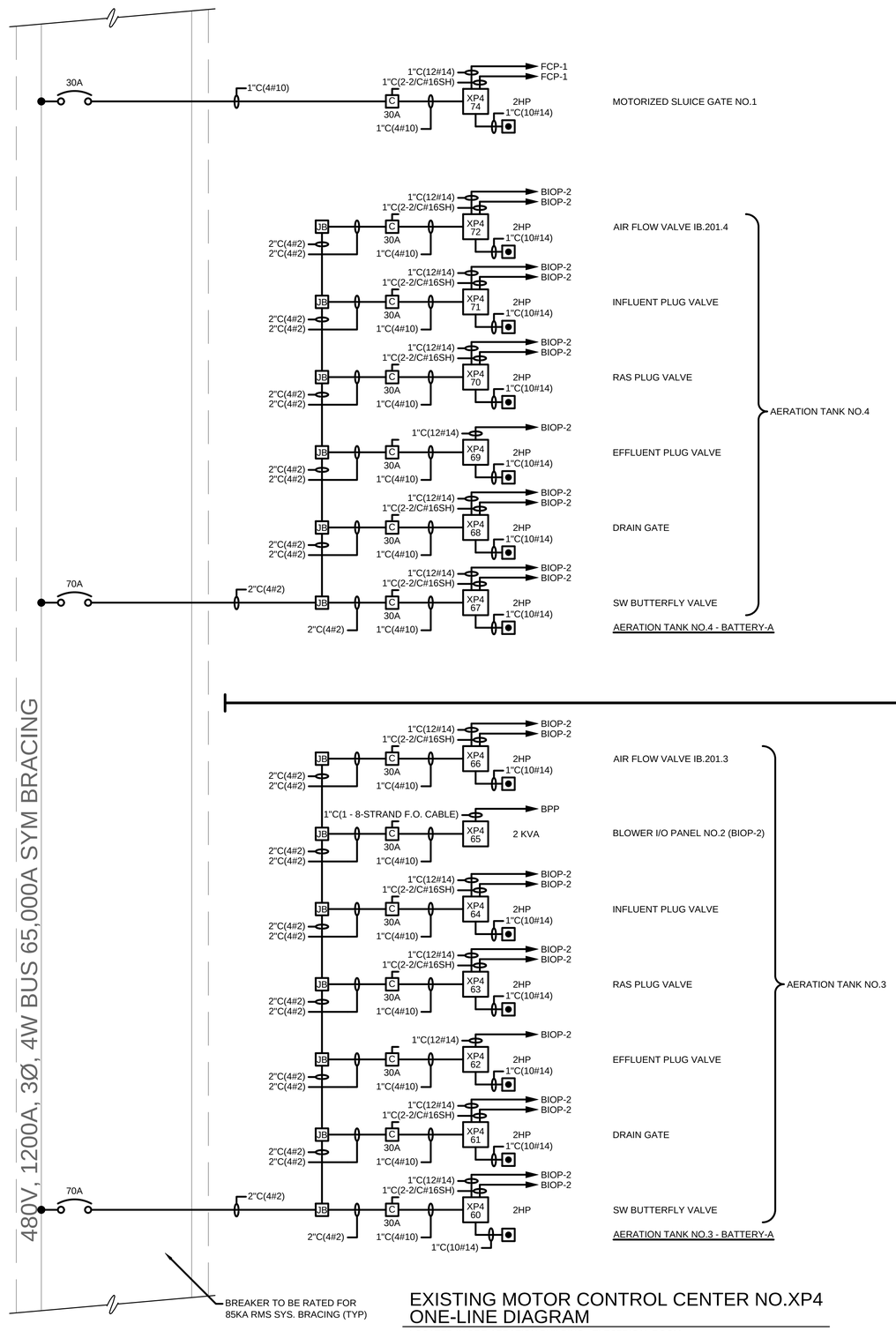

NOTES:

1. CONTRACTOR SHALL OBTAIN THE SERVICES OF ROCKWELL - MCNAUGHTON/MCKAY TO FURNISH AND INSTALL NEW MOLDED CASE CIRCUIT BREAKERS WITHIN EXISTING MOTOR CONTROL CENTER XP4. FURNISH AND INSTALL NEW BREAKERS, DOORS, HANDLES FOR BREAKER OPERATION. INSTALL NEW NAMETAGS. BREAKERS TO HAVE MINIMUM SHORT CIRCUIT WITHSTAND RATING OF 85KA RMS SYM. BRACING.
2. OBTAIN THE SERVICES OF ROCKWELL-MCNAUGHT-MCKAY ELECTRIC TO FURNISH, INSTALL AND PROGRAM THE NEW MOLDED CASE CIRCUIT BREAKERS SHOWN. FURNISH DEVICENET CONNECTIONS, CABLES, TERMINATION RESISTORS, PLC PROGRAMMING AND PANELVIEW PROGRAMMING TO INTEGRATE THESE NEW BREAKERS INTO THE EXISTING ROCKWELL SMART MOTOR CONTROL CENTER(S).

EXISTING MOTOR CONTROL CENTER NO.XP4 ONE-LINE DIAGRAM

LOCATED IN PRE-AERATION BUILDING - ELECTRICAL ROOM

TETRA TECH
www.tetratech.com
401 SOUTH WASHINGTON SQUARE, SUITE 100
LANSING, MI. 48933
PHONE: 517.316.3930, FAX: 517.484.8140

MARK	DATE	DESCRIPTION	BY
	5/29/20	ISSUED FOR BIDS	

CITY OF FLINT, MICHIGAN
FLINT WPC AERATION SYSTEM IMPROVEMENTS
MOTOR CONTOL CENTER ONE-LINE PROPOSED WORK

PROJ:	200-156238-19001
DESN:	GCJ
DRWN:	JLS
CHKD:	WAP

E-105

Copyright: Tetra Tech

Bar Measures 1 inch, otherwise drawing not to scale

5/26/2020 9:58:26 PM - \\TTS073FS1\PROJECTS\IER\156238\200-156238-190001\CAD\SHEETFILES\E-105_MCC ONELINE PR_JV.DWG - SHANK, JASON

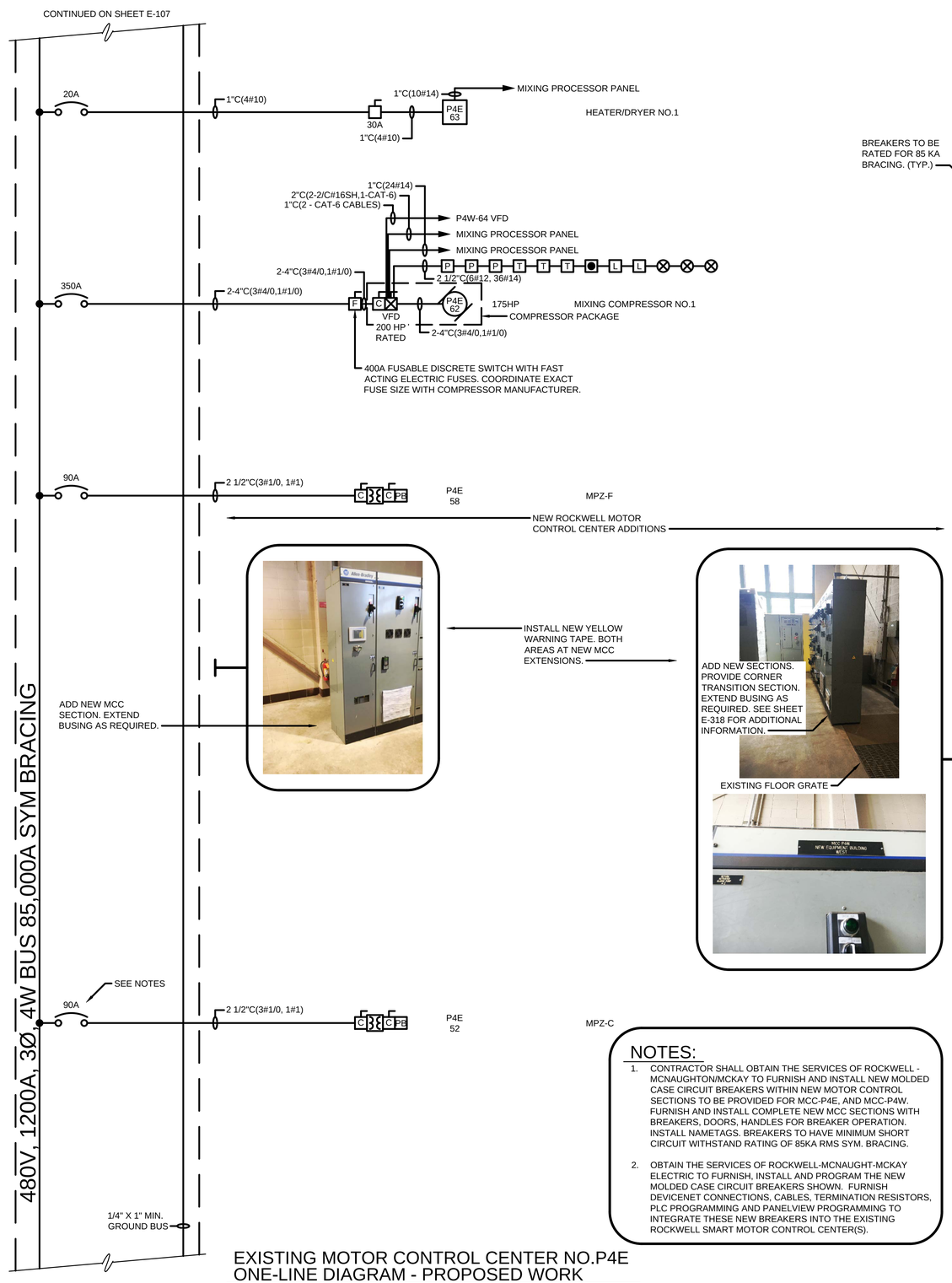

NOTES:

1. CONTRACTOR SHALL OBTAIN THE SERVICES OF ROCKWELL - MCNAUGHTON/MCKAY TO FURNISH AND INSTALL NEW MOLDED CASE CIRCUIT BREAKERS WITHIN NEW MOTOR CONTROL SECTIONS TO BE PROVIDED FOR MCC-P4E, AND MCC-P4W. FURNISH AND INSTALL COMPLETE NEW MCC SECTIONS WITH BREAKERS, DOORS, HANDLES FOR BREAKER OPERATION. INSTALL NAMETAGS. BREAKERS TO HAVE MINIMUM SHORT CIRCUIT WITHSTAND RATING OF 85KA RMS SYM. BRACING.

2. OBTAIN THE SERVICES OF ROCKWELL-MCNAUGHT-MCKAY ELECTRIC TO FURNISH, INSTALL AND PROGRAM THE NEW MOLDED CASE CIRCUIT BREAKERS SHOWN. FURNISH DEVICENET CONNECTIONS, CABLES, TERMINATION RESISTORS, PLC PROGRAMMING AND PANELVIEW PROGRAMMING TO INTEGRATE THESE NEW BREAKERS INTO THE EXISTING ROCKWELL SMART MOTOR CONTROL CENTER(S).

EXISTING MOTOR CONTROL CENTER NO.P4E ONE-LINE DIAGRAM - PROPOSED WORK

LOCATED IN EQUIPMENT BUILDING

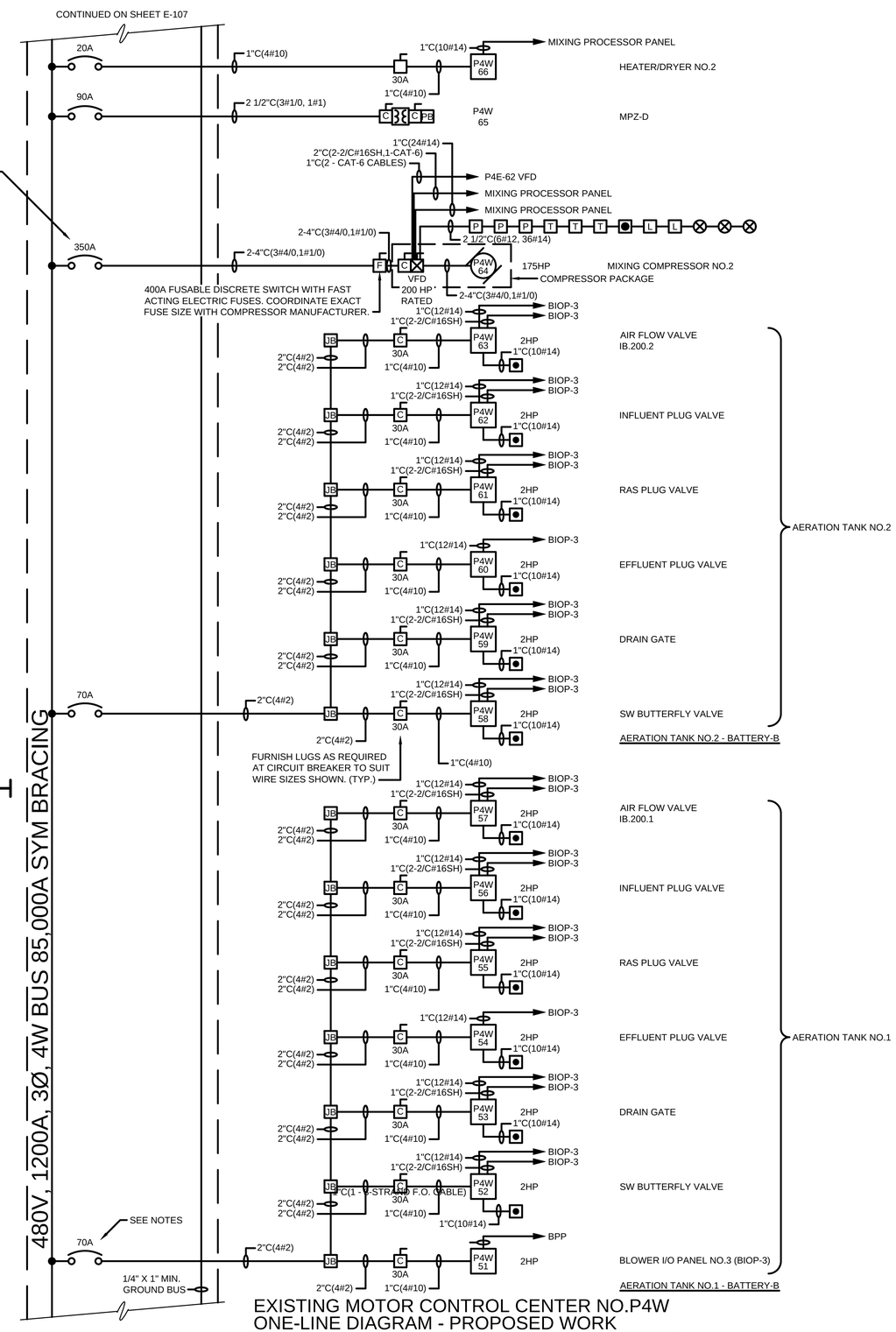

EXISTING MOTOR CONTROL CENTER NO.P4W ONE-LINE DIAGRAM - PROPOSED WORK

LOCATED IN EQUIPMENT BUILDING

TETRA TECH
www.tetratech.com
401 SOUTH WASHINGTON SQUARE, SUITE 100
LANSING, MI, 48933
PHONE: 517.316.3930, FAX: 517.484.8140

MARK	DATE	DESCRIPTION	BY
	5/29/20	ISSUED FOR BIDS	

CITY OF FLINT, MICHIGAN

FLINT WPC AERATION SYSTEM IMPROVEMENTS

MOTOR CONTROL CENTER ONE-LINE PROPOSED WORK

PROJ:	200-156238-19001
DESN:	GCJ
DRWN:	JLS
CHKD:	WAP

E-106

Copyright: Tetra Tech

Bar Measures 1 inch, otherwise drawing not to scale

5/26/2020 9:59:38 PM - \\TTS073FS1\PROJECTS\ER\156238\200-156238-190001\CAD\SHEETFILES\E\E-106_MCC ONELINE PR.DWG - SHANK, JASON

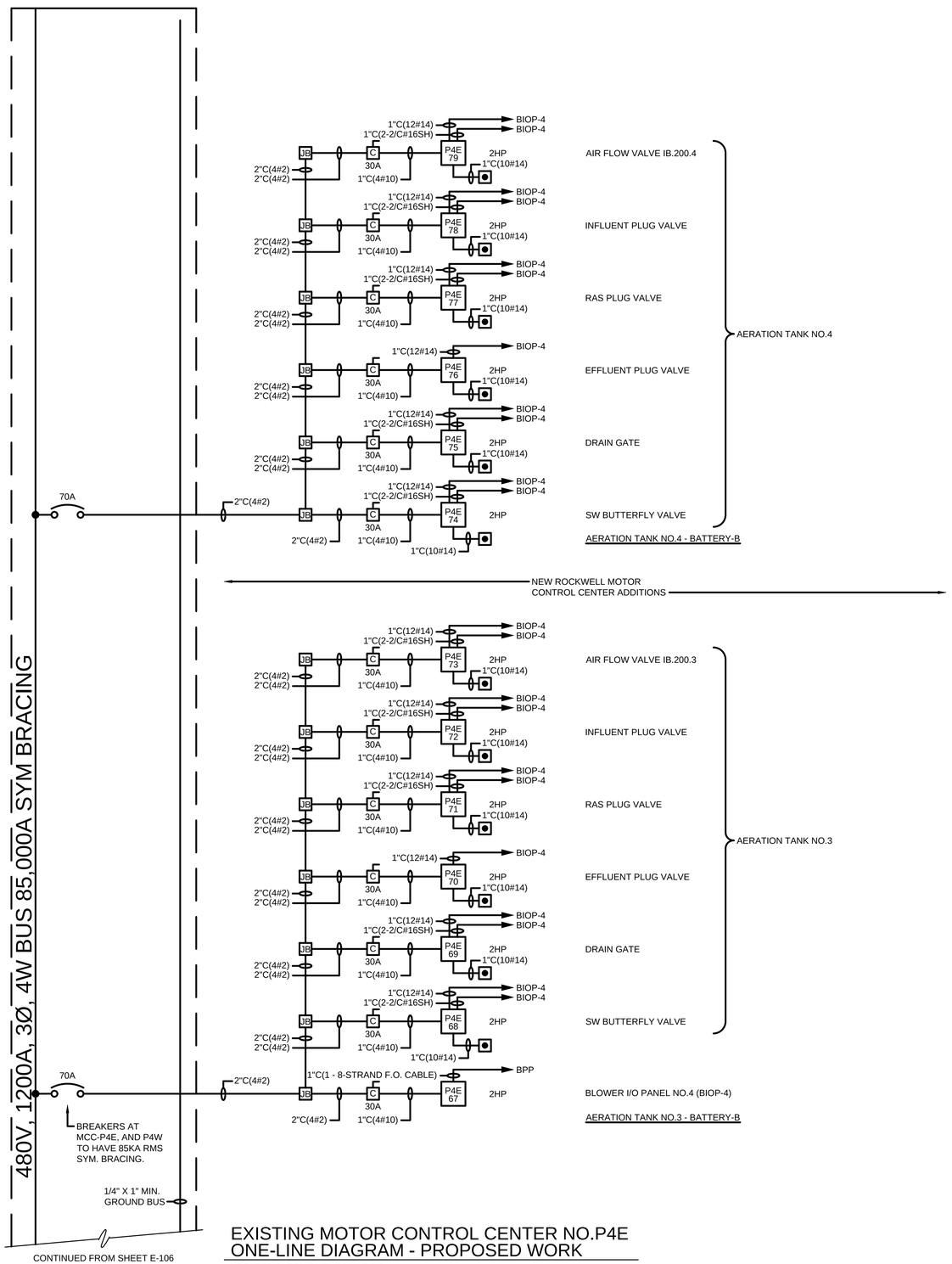

EXISTING MOTOR CONTROL CENTER NO.P4E ONE-LINE DIAGRAM - PROPOSED WORK

LOCATED IN EQUIPMENT BUILDING

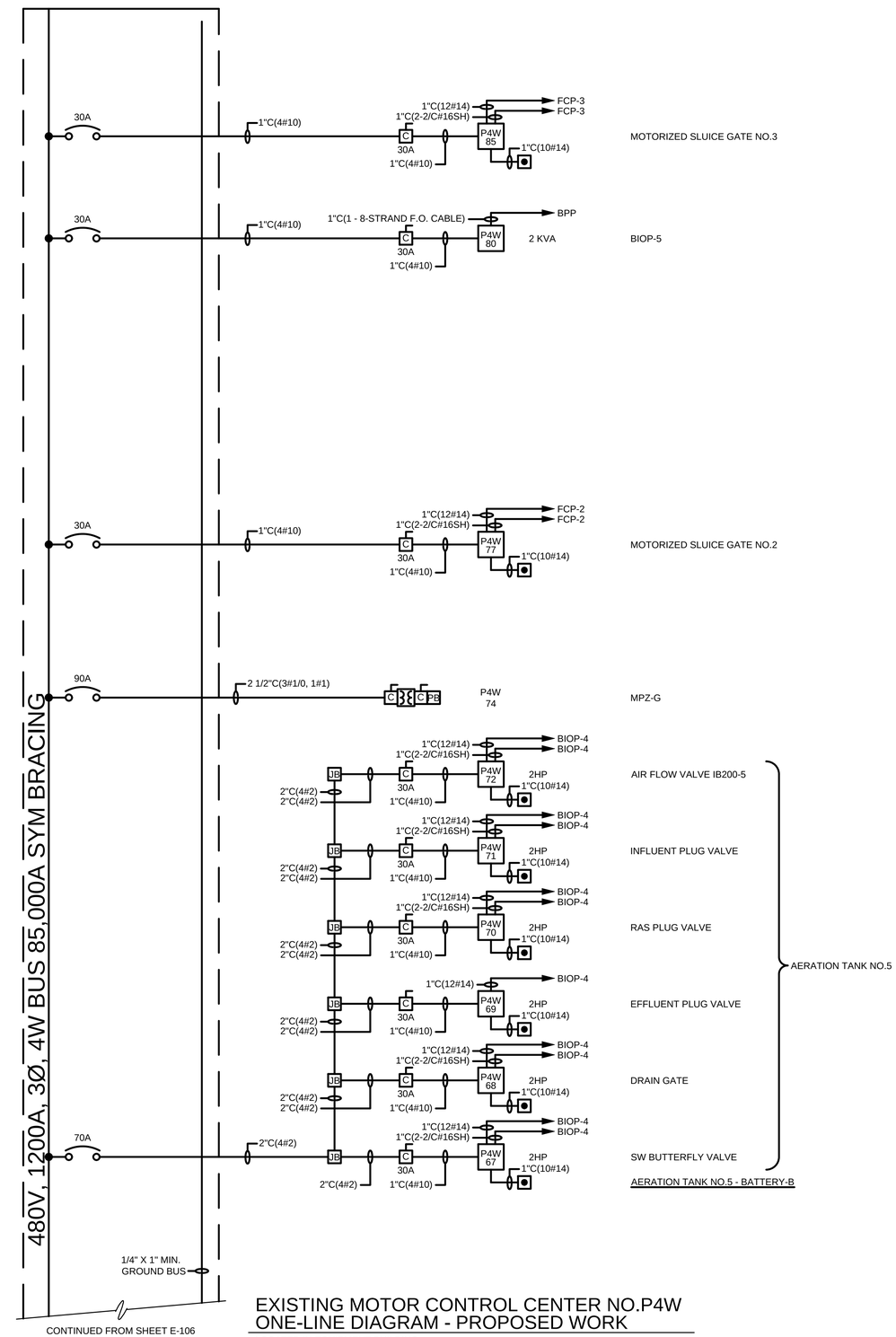

EXISTING MOTOR CONTROL CENTER NO.P4W ONE-LINE DIAGRAM - PROPOSED WORK

LOCATED IN EQUIPMENT BUILDING

TETRA TECH
www.tetratech.com
401 SOUTH WASHINGTON SQUARE, SUITE 100
LANSING, MI. 48933
PHONE: 517.316.3930, FAX: 517.484.8140

MARK	DATE	DESCRIPTION	BY
	5/29/20	ISSUED FOR BIDS	

CITY OF FLINT, MICHIGAN
FLINT WPC AERATION SYSTEM IMPROVEMENTS
MOTOR CONTROL CENTER ONE-LINE PROPOSED WORK

PROJ:	200-156238-19001
DESN:	GCJ
DRWN:	JLS
CHKD:	WAP

E-107

Copyright: Tetra Tech

Bar Measures 1 inch, otherwise drawing not to scale

5/27/2020 9:59:22 AM - \\TTS073FS1\ROJECTS\IER\156238\200-156238-19001\CAD\SHEETFILES\E-107_MCC ONELINE PR_II.DWG - SHANK, JASON

NOTES:

1. CONTRACTOR SHALL OBTAIN THE SERVICES OF ROCKWELL - MCNAUGHTON/MCKAY TO FURNISH AND INSTALL NEW MOLDED CASE CIRCUIT BREAKERS WITHIN EXISTING MOTOR CONTROL CENTER 7U. FURNISH AND INSTALL NEW BREAKERS, DOORS, HANDLES FOR BREAKER OPERATION. INSTALL NEW NAMETAGS. BREAKERS TO HAVE MINIMUM SHORT CIRCUIT WITHSTAND RATING OF 85KA RMS SYM. BRACING.

2. OBTAIN THE SERVICES OF ROCKWELL-MCNAUGHT-MCKAY ELECTRIC TO FURNISH, INSTALL AND PROGRAM THE NEW MOLDED CASE CIRCUIT BREAKERS SHOWN. FURNISH DEVICENET CONNECTIONS, CABLES, TERMINATION RESISTORS, PLC PROGRAMMING AND PANELVIEW PROGRAMMING TO INTEGRATE THESE NEW BREAKERS INTO THE EXISTING ROCKWELL SMART MOTOR CONTROL CENTER(S).

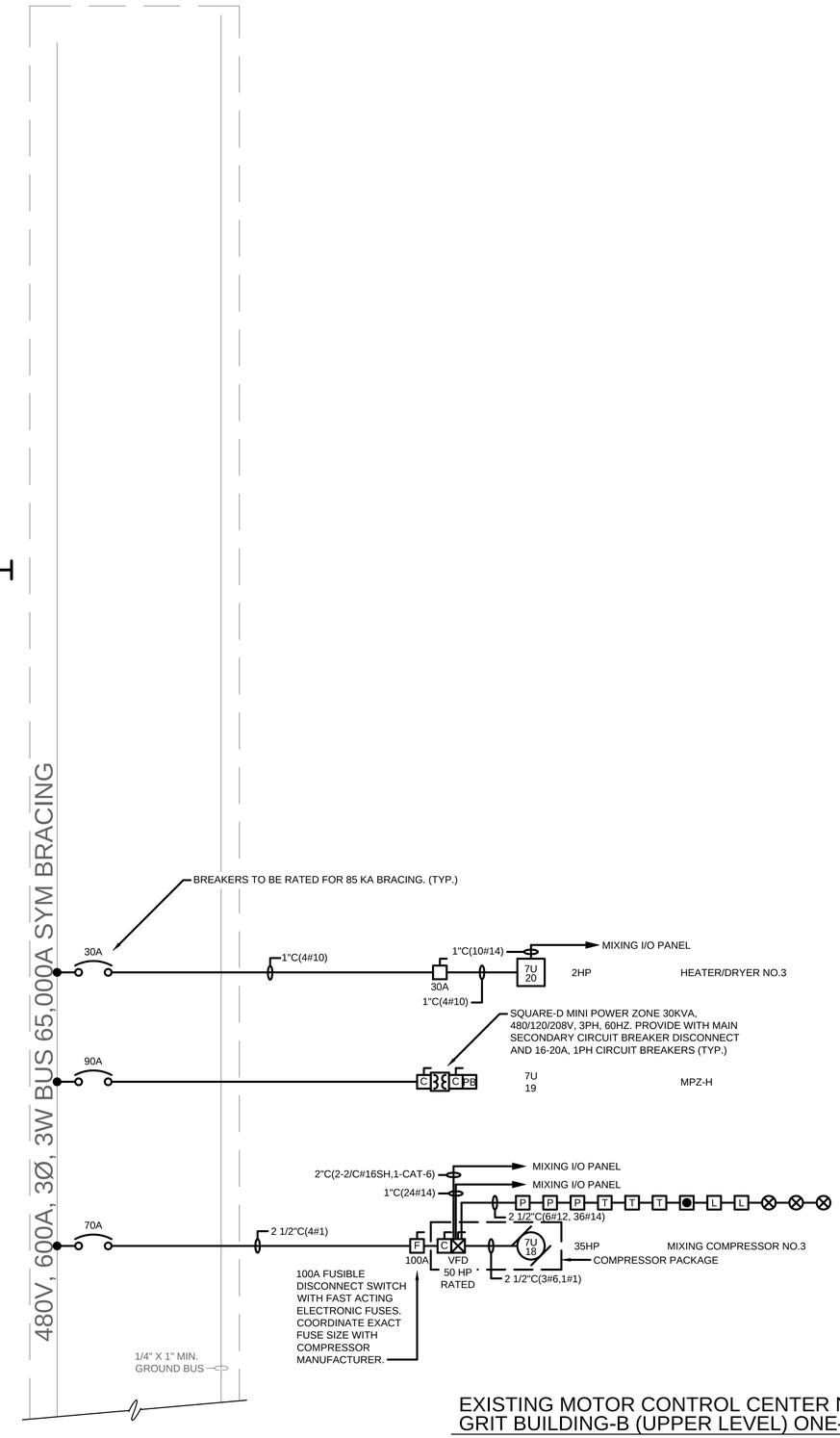

EXISTING MOTOR CONTROL CENTER NO.7U
GRIT BUILDING-B (UPPER LEVEL) ONE-LINE DIAGRAM

LOCATED IN GRIT BUILDING

TETRA TECH
www.tetratech.com
401 SOUTH WASHINGTON SQUARE, SUITE 100
LANSING, MI. 48933
PHONE: 517.316.3930, FAX: 517.484.8140

MARK	DATE	DESCRIPTION	BY
	5/29/20	ISSUED FOR BIDS	

CITY OF FLINT, MICHIGAN
FLINT WPC AERATION SYSTEM IMPROVEMENTS
MOTOR CONTROL CENTER ONE-LINE PROPOSED WORK

PROJ:	200-156238-19001
DESN:	GCJ
DRWN:	JLS
CHKD:	WAP

E-108

Copyright: Tetra Tech

Bar Measures 1 inch, otherwise drawing not to scale

5/25/2020 11:06:22 AM - \\TTS073FS1\PROJECTS\IER\156238\200-156238-19001\CAD\SHEETFILES\E-108_MCC ONELINE PR_V.DWG - SHANK, JASON

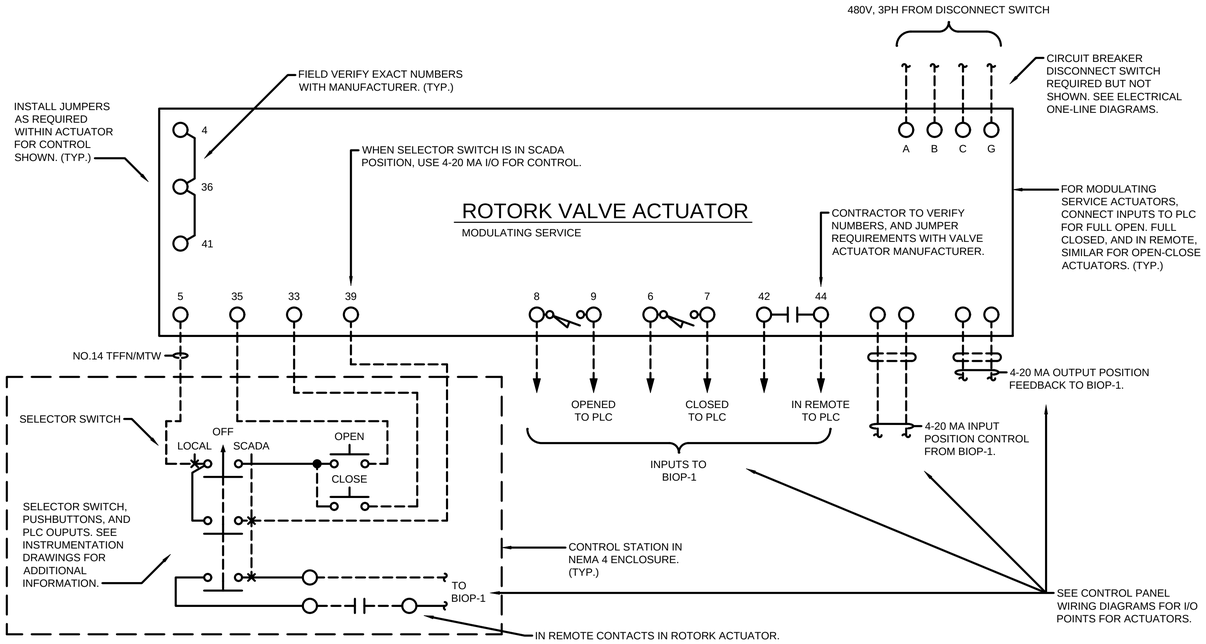

MOTORIZED MODULATING VALVE ACTUATOR - WIRING DIAGRAM

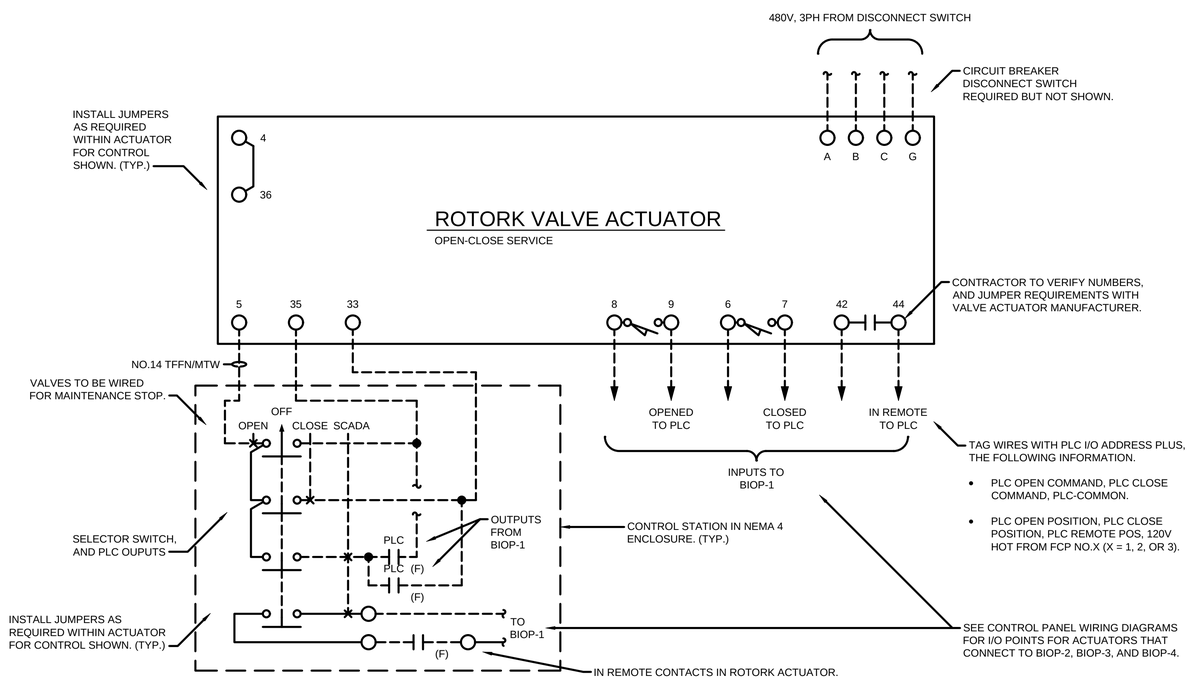

MOTORIZED OPEN-CLOSED VALVE ACTUATOR - WIRING DIAGRAM (TYP.)

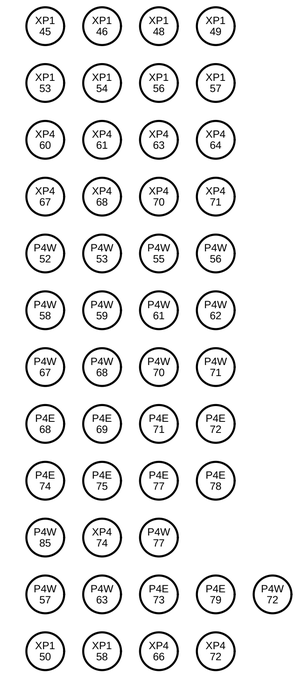

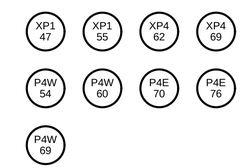

TETRA TECH
www.tetratech.com
401 SOUTH WASHINGTON SQUARE, SUITE 100
LANSING, MI. 48933
PHONE: 517.316.3930, FAX: 517.484.8140

MARK	DATE	DESCRIPTION	BY
	5/29/20	ISSUED FOR BIDS	

CITY OF FLINT, MICHIGAN
FLINT WPC AERATION SYSTEM IMPROVEMENTS
WIRING DIAGRAMS

PROJ:	200-156238-19001
DESN:	GCJ
DRWN:	JLS
CHKD:	WAP

E-200

Copyright: Tetra Tech

5/26/2020 10:10:59 PM - \\TTSO73FS1\PROJECTS\ER\156238\200-156238-19001\CAD\SHEETFILES\E\E-200_WIR DIA.DWG - SHANK, JASON

Bar Measures 1 inch, otherwise drawing not to scale

NEMA 3R/4 STAINLESS STEEL ENCLOSURE.

PANELBOARD - MPZ-A

VOLTAGE: 120/208V, 3PH
BUS RATING: 100A

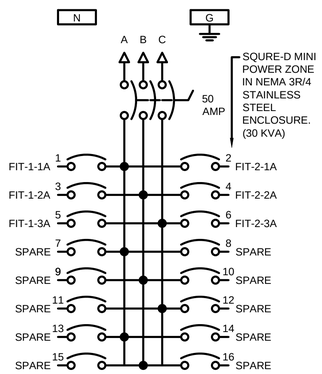

BREAKERS RATED 24 KA. (TYP.)

120/208V 3PH 16CKTS

SPD

MPZ-A

LOCATED IN AERATION TANKS BATTERY "A" TUNNEL

CIRCUIT BREAKERS ARE 20A, 1P UNLESS SHOWN OTHERWISE.

NEMA 3R/4 STAINLESS STEEL ENCLOSURE.

PANELBOARD - MPZ-B

VOLTAGE: 120/208V, 3PH
BUS RATING: 100A

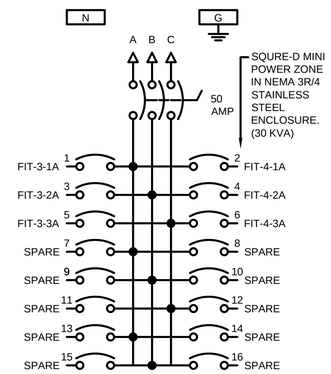

BREAKERS RATED 24 KA. (TYP.)

120/208V 3PH 16CKTS

SPD

MPZ-B

LOCATED IN AERATION TANKS BATTERY "A" TUNNEL

CIRCUIT BREAKERS ARE 20A, 1P UNLESS SHOWN OTHERWISE.

NEMA 3R/4 STAINLESS STEEL ENCLOSURE.

PANELBOARD - MPZ-C

VOLTAGE: 120/208V, 3PH
BUS RATING: 100A

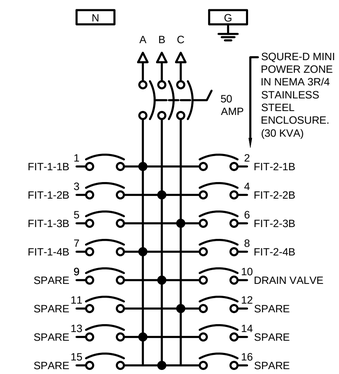

BREAKERS RATED 24 KA. (TYP.)

120/208V 3PH 16CKTS

SPD

MPZ-C

LOCATED IN AERATION TANKS BATTERY "B" TUNNEL

CIRCUIT BREAKERS ARE 20A, 1P UNLESS SHOWN OTHERWISE.

NEMA 3R/4 STAINLESS STEEL ENCLOSURE.

PANELBOARD - MPZ-D

VOLTAGE: 120/208V, 3PH
BUS RATING: 100A

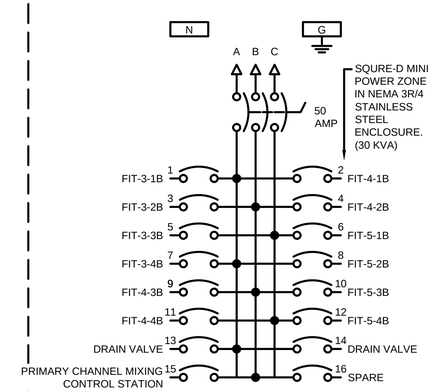

BREAKERS RATED 24 KA. (TYP.)

120/208V 3PH 16CKTS

SPD

MPZ-D

LOCATED IN AERATION TANKS BATTERY "B" TUNNEL

CIRCUIT BREAKERS ARE 20A, 1P UNLESS SHOWN OTHERWISE.

NEMA 3R/4 STAINLESS STEEL ENCLOSURE

PANELBOARD - MPZ-E

VOLTAGE: 120/208V, 3PH
BUS RATING: 100A

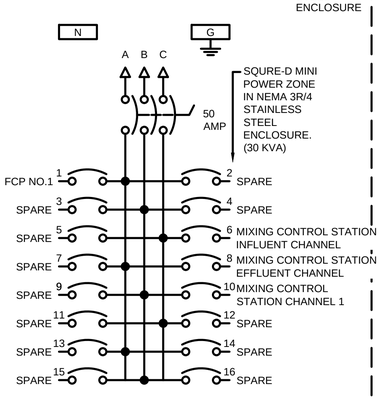

BREAKERS RATED 24 KA. (TYP.)

120/208V 3PH 16CKTS

SPD

MPZ-E

OUTDOORS AT AERATION TANKS BATTERY "A"

CIRCUIT BREAKERS ARE 20A, 1P UNLESS SHOWN OTHERWISE.

NEMA 3R/4 STAINLESS STEEL ENCLOSURE

PANELBOARD - MPZ-F

VOLTAGE: 120/208V, 3PH
BUS RATING: 100A

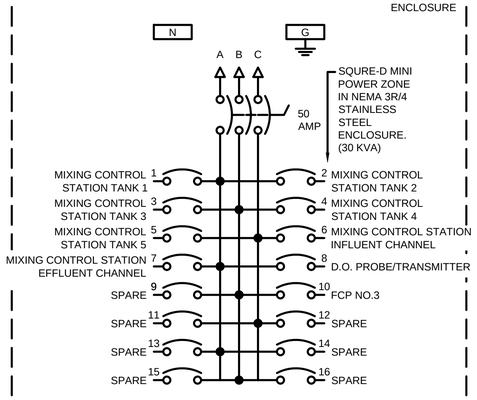

BREAKERS RATED 24 KA. (TYP.)

120/208V 3PH 16CKTS

SPD

MPZ-F

OUTDOORS AT AERATION TANKS BATTERY "B"

CIRCUIT BREAKERS ARE 20A, 1P UNLESS SHOWN OTHERWISE.

NEMA 3R/4 STAINLESS STEEL ENCLOSURE

PANELBOARD - MPZ-G

VOLTAGE: 120/208V, 3PH
BUS RATING: 100A

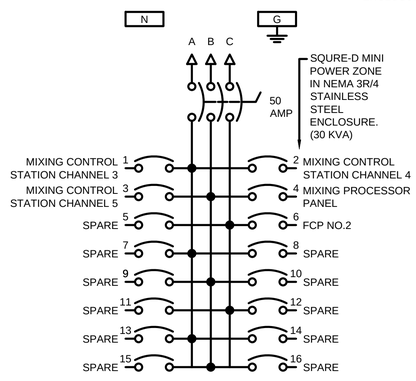

BREAKERS RATED 24 KA. (TYP.)

120/208V 3PH 16CKTS

SPD

MPZ-G

LOCATED IN EQUIPMENT BUILDING

CIRCUIT BREAKERS ARE 20A, 1P UNLESS SHOWN OTHERWISE.

NEMA 3R/4 STAINLESS STEEL ENCLOSURE

PANELBOARD - MPZ-H

VOLTAGE: 120/208V, 3PH
BUS RATING: 100A

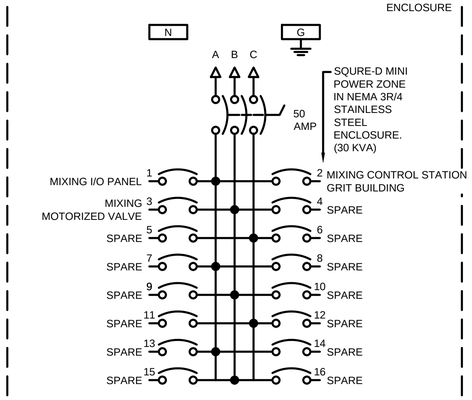

BREAKERS RATED 24 KA. (TYP.)

120/208V 3PH 16CKTS

SPD

MPZ-H

LOCATED IN GRIT BUILDING-B

CIRCUIT BREAKERS ARE 20A, 1P UNLESS SHOWN OTHERWISE.

PANELBOARD SCHEDULES

TETRA TECH
www.tetratech.com
401 SOUTH WASHINGTON SQUARE, SUITE 100
LANSING, MI. 48933
PHONE: 517.316.3930, FAX: 517.484.8140

MARK	DATE	DESCRIPTION	BY
	5/29/20	ISSUED FOR BIDS	

CITY OF FLINT, MICHIGAN
FLINT WPC AERATION SYSTEM IMPROVEMENTS
PANELBOARD SCHEDULES

PROJ:	200-156238-19001
DESN:	GCJ
DRWN:	JLS
CHKD:	WAP

E-201

Copyright: Tetra Tech

Bar Measures 1 inch, otherwise drawing not to scale

5/26/2020 10:14:49 PM - \\TTS073FS1\PROJECTS\IER\156238\200-156238-190001\CAD\SHEETFILES\E-201_PANELBOARD SCHEDULES.DWG - SHANK, JASON

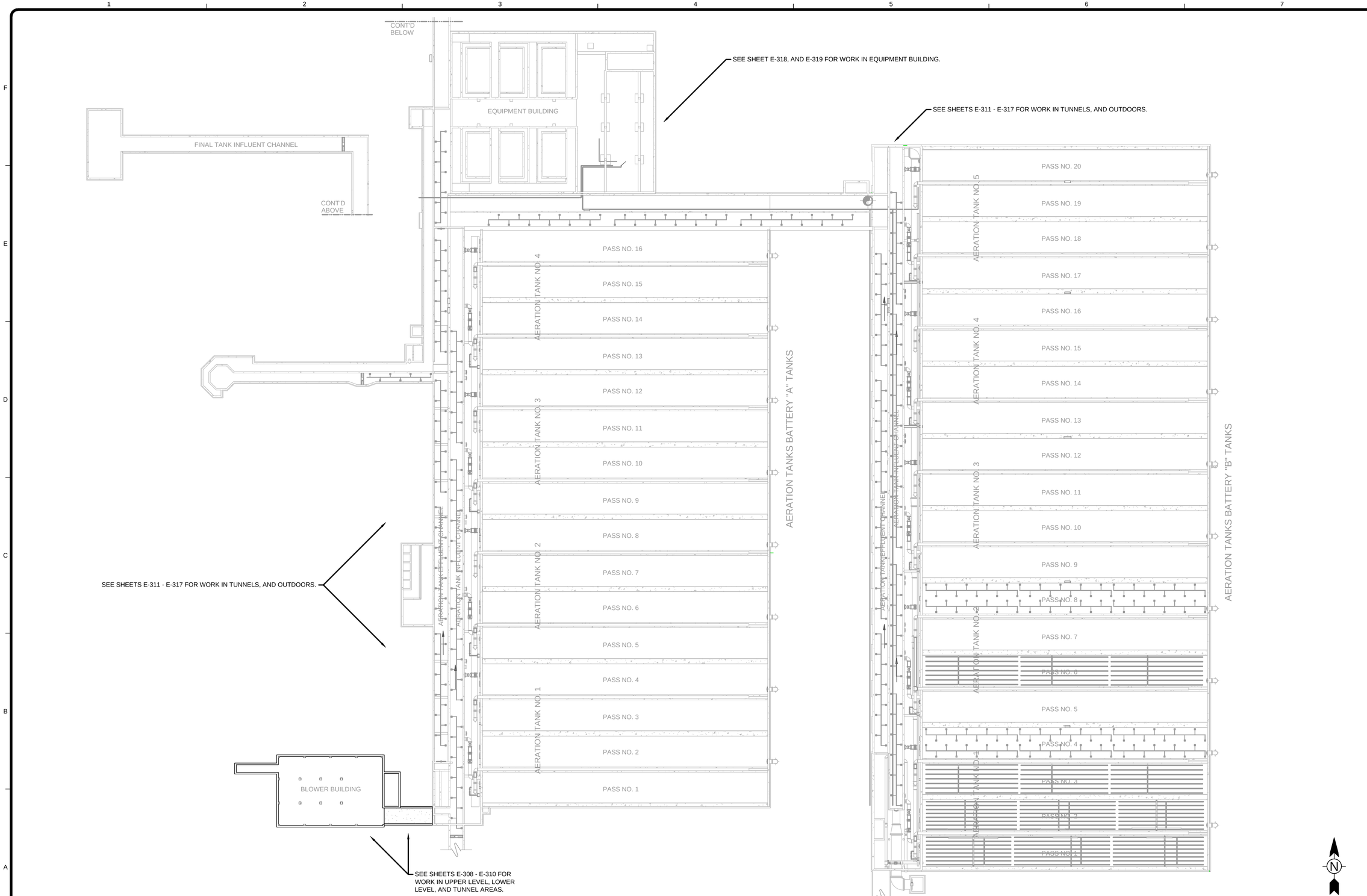

AERATION TANK PLAN

SCALE: 1/32"=1'-0"
NEMA 4 AREA

TETRA TECH
www.tetratech.com
401 SOUTH WASHINGTON SQUARE, SUITE 100
LANSING, MI, 48933
PHONE: 517.316.3930, FAX: 517.484.8140

MARK	DATE	DESCRIPTION	BY
	5/29/20	ISSUED FOR BIDS	

CITY OF FLINT, MICHIGAN
FLINT WPC AERATION SYSTEM IMPROVEMENTS
AERATION TANKS
OVERALL ELECTRICAL PLAN

PROJ:	200-156238-19001
DESN:	GCJ
DRWN:	JLS
CHKD:	WAP

E-300

Copyright: Tetra Tech

Bar Measures 1 inch, otherwise drawing not to scale

5/21/2020 12:34:05 PM - \\TTS073FS1\PROJECTS\IER\156238\200-156238-19001\CAD\SHEETFILES\EE-300_AERATION TANKS.DWG - SHANK, JASON

DEMOLISH TOP EQUIPMENT IN ADDITION TO BLOWER SWITCHGEAR.

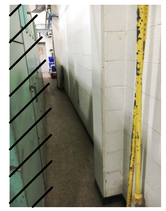

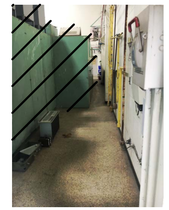

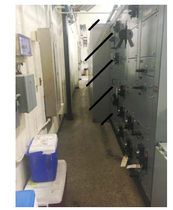

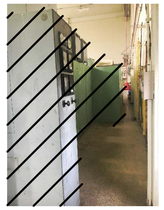

STARTERS/BREAKERS, AND TRANSITION SECTIONS.

FIELD LOCATE CONDUITS.

PB, MCC-XP1, TRANSFORMERS 12A - 12B, ATS THIS AREA TO REMAIN.

FIELD LOCATE, AND DEMOLISH CONDUITS/WIRING LOCATED IN LEVEL BELOW.

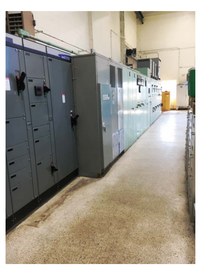

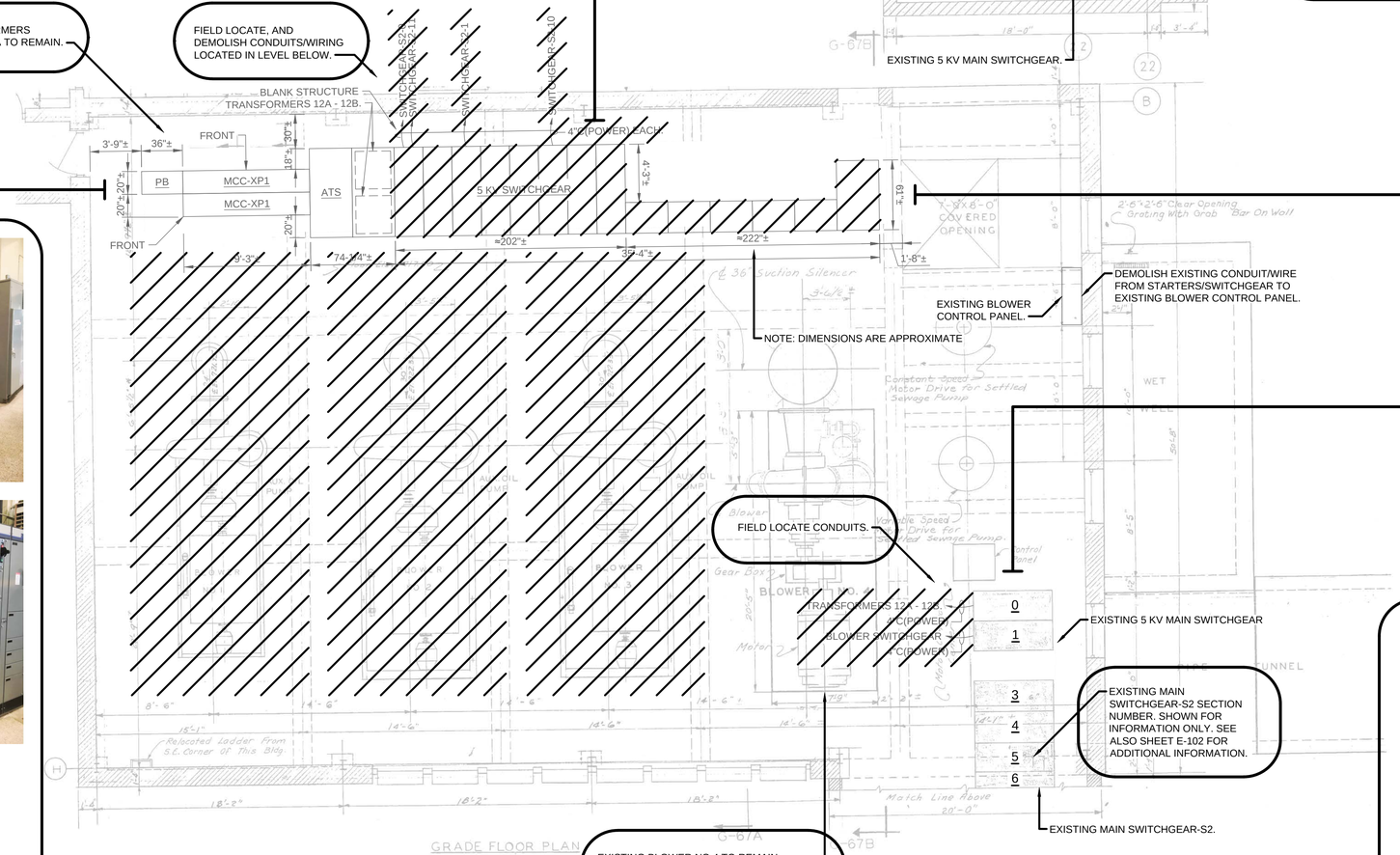

NOTES

1. DEMOLISH EXISTING BLOWERS, MOTORS, CONDUIT AND WIRE FROM BLOWERS TO EXISTING STARTERS(POWER CONDUIT/WIRE, FIELD CONDUIT/WIRE, SENSOR CONDUIT/WIRE, ETC). DEMOLISH EXISTING ROTORK MOTORIZED ACTUATORS, AND ASSOCIATED CONDUIT AND WIRE TO EXISTING BLOWER CONTROL PANEL, STARTERS, AND MOTOR CONTROL CENTER. TURN OVER EXISTING ROTORK ACTUATOR TO OWNER.
2. FIELD VERIFY EXISTING DEMOLITION REQUIRED PRIOR TO BIDS.
3. DEMOLISH EXISTING CONDUIT/WIRES FROM SWITCHGEAR-S2 TO EXISTING BLOWER/SWITCHGEAR, AND TRANSFORMERS 12A-2B.
4. DEMOLISH EXISTING 5 KV BLOWER SWITCHGEAR INCLUDING STARTERS, OIL TRANSFORMER, TRANSITION SECTIONS, FEEDER BREAKERS, AND FEEDER SWITCHES, ETC.
5. SEE ALSO NOTES ON SHEET E-308 FOR ADDITIONAL INFORMATION.

BLOWER BUILDING FIRST FLOOR PLAN - DEMOLITION

SCALE: 3/16"=1'-0"
NEMA 4 AREA

0 2'-8" 5'-4" 10'-8"
SCALE: 3/16" = 1'-0"

EXISTING DRAWING FROM PREVIOUS PROJECT. PROPOSED WORK SHOWN BOLD, CROSSHATCHED, AND/OR CIRCLED.

TETRA TECH
www.tetratech.com
401 SOUTH WASHINGTON SQUARE, SUITE 100
LANSING, MI, 48933
PHONE: 517.316.3930, FAX: 517.484.8140

MARK	DATE	DESCRIPTION	BY
	5/29/20	ISSUED FOR BIDS	

CITY OF FLINT, MICHIGAN
FLINT WPC AERATION SYSTEM IMPROVEMENTS
EXISTING BLOWER BUILDING BACKGROUND PLAN DEMOLITION

PROJ:	200-156238-19001
DESN:	GCJ
DRWN:	JLS
CHKD:	WAP

E-301

Copyright: Tetra Tech

Bar Measures 1 inch, otherwise drawing not to scale

5/26/2020 10:19:51 PM - \\TTS0735FS1_PROJECTS\IER\156238\200-156238-19001\CAD\SHEETFILES\E\E-301_EX BACKGROUND PLAN DEMO.DWG - SHANK, JASON

SEE NOTE NO.2 ON SHEE E-308.
SEE ALSO SHEE E-103 FOR
ADDITIONAL INFORMATION.

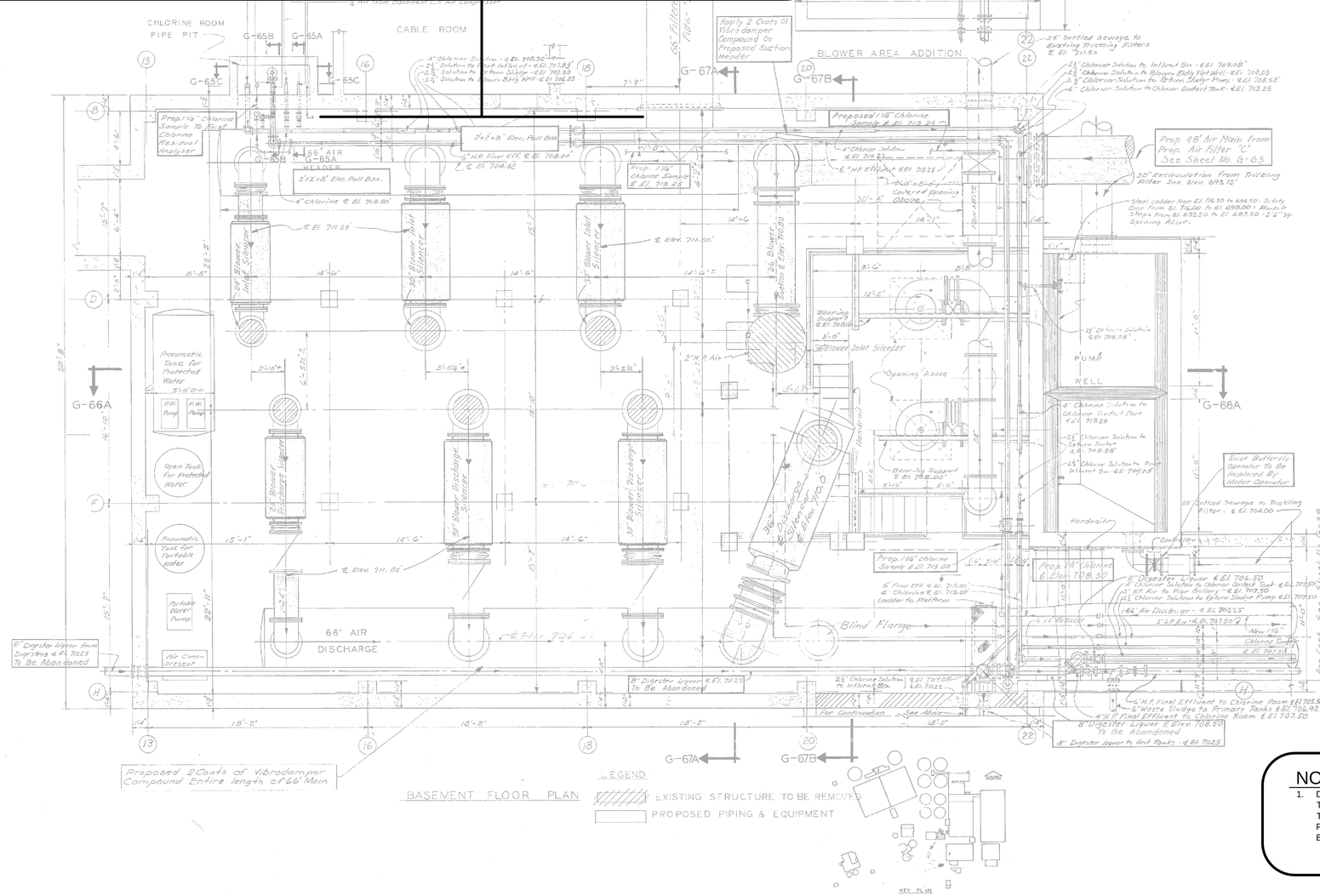

BASEMENT FLOOR PLAN

NOTES

1. DEMOLISH EXISTING FLOWMETERS, DP TRANSMITTERS, TUBING, CONDUIT AND WIRE. DEMOLISH EXISTING TRANSMITTERS, CONDUIT AND WIRE TO EXISTING PLC PANEL IN TUNNEL AND CONDUIT AND WIRE TO EXISTING BLOWER CONTROL PANEL IN BLOWER ROOM.

BLOWER BUILDING LOWER LEVEL FLOOR PLAN - DEMOLITION

SCALE: 3/16"=1'-0"
NEMA 4 AREA

0 2'-8" 5'-4" 10'-8"
SCALE: 3/16" = 1'-0"

EXISTING DRAWING FROM PREVIOUS PROJECT.
PROPOSED WORK SHOWN BOLD,
CROSSHATCHED, AND/OR CIRCLED.

TETRA TECH
www.tetratech.com
401 SOUTH WASHINGTON SQUARE, SUITE 100
LANSING, MI, 48933
PHONE: 517.316.3930, FAX: 517.484.8140

MARK	DATE	DESCRIPTION	BY
	5/29/20	ISSUED FOR BIDS	

CITY OF FLINT, MICHIGAN
FLINT WPC AERATION SYSTEM IMPROVEMENTS
EXISTING BLOWER BUILDING BACKGROUND PLAN LOWER LEVEL DEMOLITION

PROJ:	200-156238-19001
DESN:	GCJ
DRWN:	JLS
CHKD:	WAP

E-302

Copyright: Tetra Tech

Bar Measures 1 inch, otherwise drawing not to scale

5/25/2020 8:48:03 AM - \\TTS0735FS1\...ROJECTS\IER\156238\200-156238-19001\CAD\SHEETFILES\E\E-302_EX BACKGROUND PLAN DEMO_II.DWG - SHANK, JASON

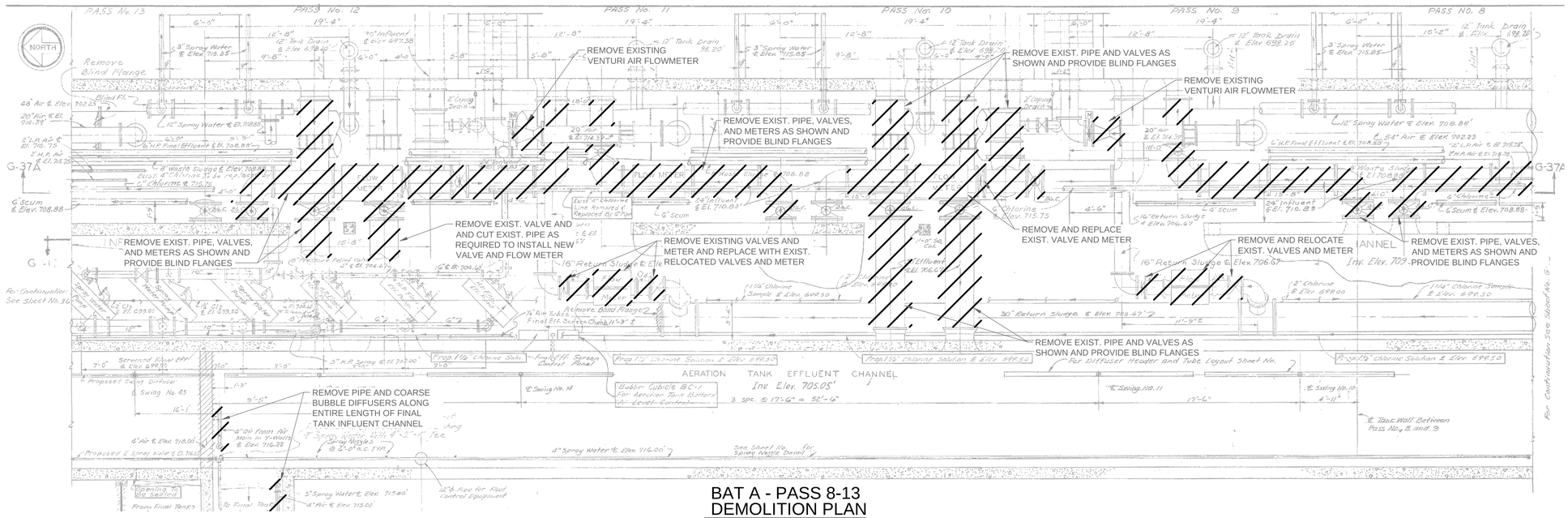

BAT A - PASS 8-13 DEMOLITION PLAN

NO SCALE
NEMA 4 AREA

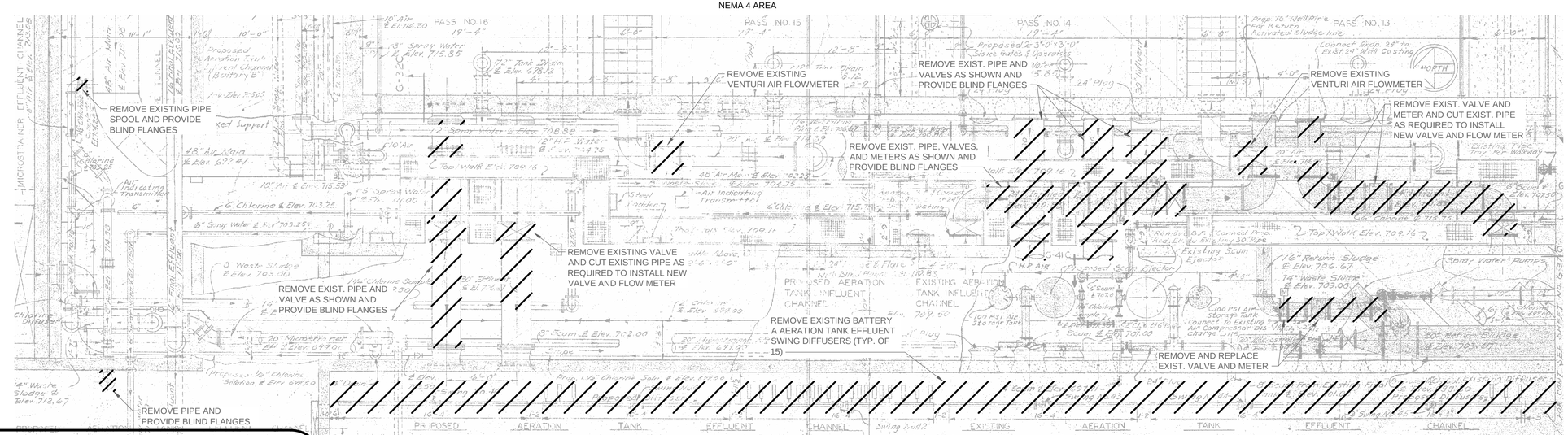

BAT A - PASS 13-16 DEMOLITION PLAN

NO SCALE
NEMA 4 AREA

NOTE: DEMOLITION WORK SHOWN FOR BATTERY "A" AERATION TANKS 1, AND 2. PASSES 1-8 ARE TYPICAL TO THE WORK SHOWN ABOVE.

NOTES:

1. FIELD LOCATE, AND DEMOLISH EXISTING FLOWMETERS, DP TRANSMITTER, TUBING, CONDUIT AND WIRE. DEMOLISH EXISTING TRANSMITTERS, CONDUIT AND WIRE TO EXISTING PLC PANEL IN TUNNEL AND CONDUIT AND WIRE TO EXISTING BLOWER CONTROL PANEL IN BLOWER ROOM.
2. FIELD LOCATE, AND DEMOLISH CONDUIT AND WIRE FROM EXISTING EQUIPMENT BACK TO EXISTING PLC PANELS IN TUNNELS. (TYP.)
3. FIELD LOCATE, AND DEMOLISH CONDUIT AND WIRE FROM EXISTING EQUIPMENT BACK TO EXISTING POWER PANELS, LIGHTING PANELS IN TUNNEL AREA. (TYP.)
4. WHERE PANELS ARE NO LONGER IN SERVICE AS A RESULT OF CONDUIT,WIRE, AND ASSOCIATED EQUIPMENT DEMOLITION, DEMOLISH EXISTING PANELS INCLUDING POWER PANELS, LIGHTING PANELS, AND PLC PANELS. TURN OVER ANY DEMOLISHED PLC EQUIPMENT TO OWNER.
5. DEMOLISH EXISTING CONDUIT AND WIRE NO LONGER IN USE IN TUNNELS. DEMOLISH BACK TO EXISTING MOTOR CONTROL CENTERS.
6. WHERE PANELS REMAIN IN SERVICE, RELABEL EXISTING DOORS AND DIRECTORIES ETC., AS SPARE.
7. SEE SHEET D-003 FOR EQUIPMENT, AND INSTRUMENTS TO BE DEMOLISHED.

EXISTING DRAWING FROM PREVIOUS PROJECT. PROPOSED WORK SHOWN BOLD, CROSSHATCHED, AND/OR CIRCLED.

TETRA TECH
www.tetratech.com
401 SOUTH WASHINGTON SQUARE, SUITE 100
LANSING, MI. 48933
PHONE: 517.316.3930, FAX: 517.484.8140

MARK	DATE	DESCRIPTION	BY
	5/29/20	ISSUED FOR BIDS	

CITY OF FLINT, MICHIGAN
FLINT WPC AERATION SYSTEM IMPROVEMENTS
AERATION TANK BATTERY "A" PIPING DEMOLITION PLANS

PROJ:	200-156238-19001
DESN:	GCJ
DRWN:	JLS
CHKD:	WAP

E-303

Copyright: Tetra Tech

Bar Measures 1 inch, otherwise drawing not to scale

5/25/2020 8:58:46 AM - \\TTSO73FS1\PROJECTS\ER\156238\200-156238-19001\CAD\SHEETFILES\E-303_AERATION TANK BATTERY A DEMO.DWG - SHANK, JASON

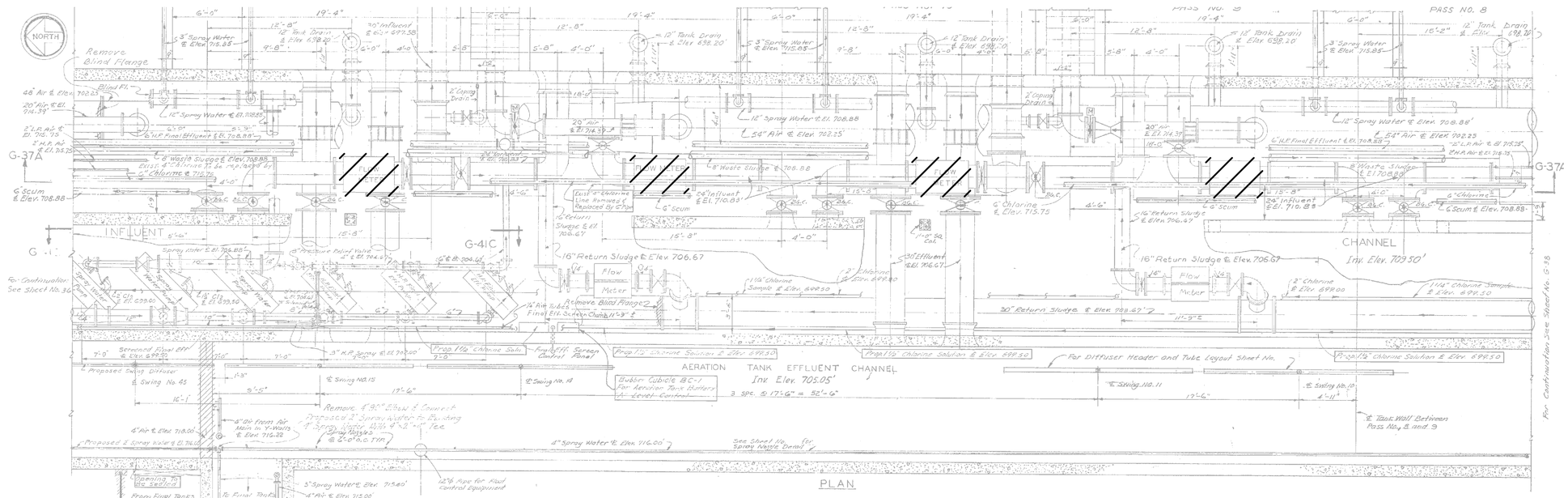

TANK BATTERY 'A' PIPE GALLERY PLAN
BACKGROUND PLAN DEMOLITION

SCALE: 3/16"=1'-0"
NEMA 4 RATED

0 2'-8" 5'-4" 10'-8"
SCALE: 3/16" = 1'-0"

EXISTING DRAWING FROM PREVIOUS PROJECT. PROPOSED WORK SHOWN BOLD, CROSSHATCHED, AND/OR CIRCLED.

TETRA TECH
www.tetratech.com
401 SOUTH WASHINGTON SQUARE, SUITE 100
LANSING, MI. 48933
PHONE: 517.316.3930, FAX: 517.484.8140

MARK	DATE	DESCRIPTION	BY
	5/29/20	ISSUED FOR BIDS	

CITY OF FLINT, MICHIGAN
FLINT WPC AERATION SYSTEM IMPROVEMENTS
TANK BATTERY "A" PIPE GALLERY BACKGROUND PLAN DEMOLITION

PROJ:	200-156238-19001
DESN:	GCJ
DRWN:	JLS
CHKD:	WAP

E-304

Copyright: Tetra Tech

Bar Measures 1 inch, otherwise drawing not to scale

5/25/2020 8:56:22 AM - \\TTS073FS1\PROJECTS\ER\156238\200-156238-19001\CAD\SHEETFILES\E-304_EX BACKGROUND PLAN DEMO_II.DWG - SHANK, JASON

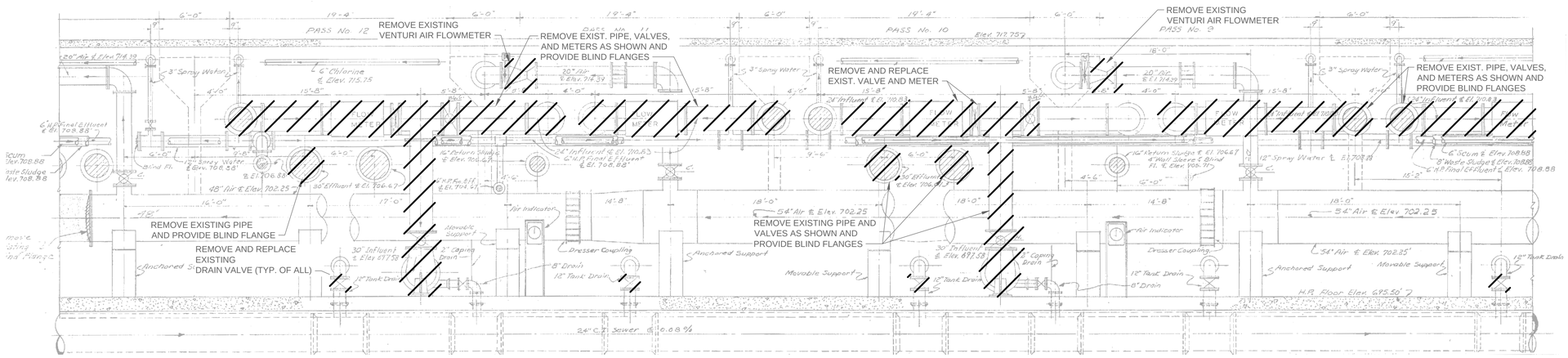

DEMOLITION SECTION - BAT A - PASS 9-12

NO SCALE

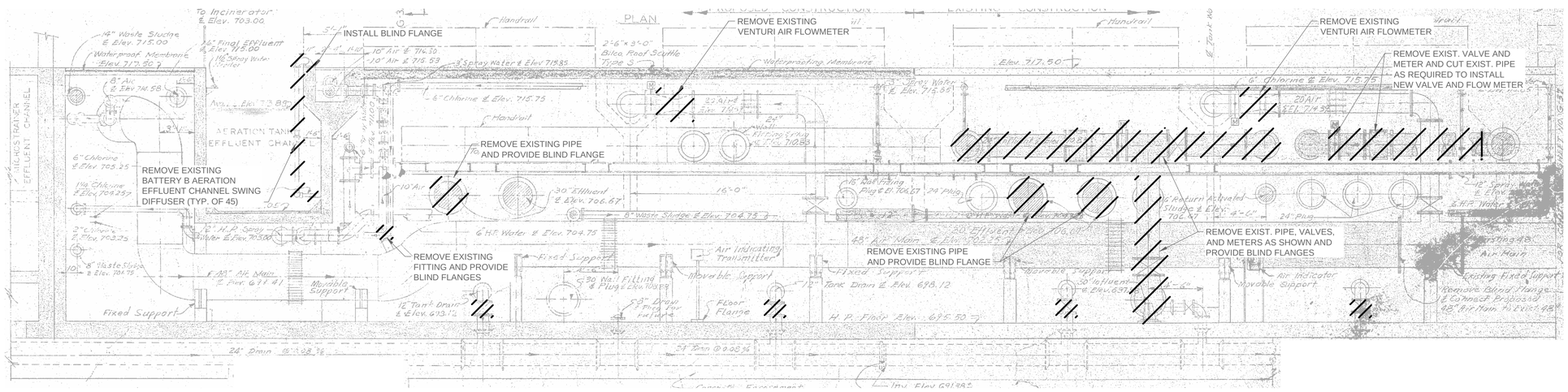

DEMOLITION SECTION - BAT A PASS 13-16

NO SCALE

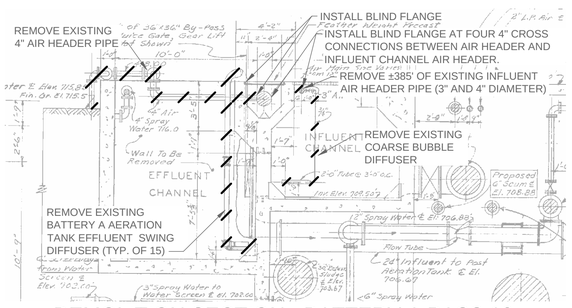

DEMOLITION SECTION - BATTERY A PASS 12

NO SCALE

NOTE: DEMOLITION WORK SHOWN FOR BATTERY "A" AERATION TANKS 1, AND 2. PASSES 1-8 ARE TYPICAL TO THE WORK SHOWN ABOVE.

NOTES:

1. FIELD LOCATE, AND DEMOLISH EXISTING FLOWMETERS, DP TRANSMITTER, TUBING, CONDUIT AND WIRE. DEMOLISH EXISTING TRANSMITTERS, CONDUIT AND WIRE TO EXISTING PLC PANEL IN TUNNEL AND CONDUIT AND WIRE TO EXISTING BLOWER CONTROL PANEL IN BLOWER ROOM.
2. FIELD LOCATE, AND DEMOLISH CONDUIT AND WIRE FROM EXISTING EQUIPMENT BACK TO EXISTING PLC PANELS IN TUNNELS. (TYP.)
3. FIELD LOCATE, AND DEMOLISH CONDUIT AND WIRE FROM EXISTING EQUIPMENT BACK TO EXISTING POWER PANELS, LIGHTING PANELS IN TUNNEL AREA. (TYP.)
4. WHERE PANELS ARE NO LONGER IN SERVICE AS A RESULT OF CONDUIT,WIRE, AND ASSOCIATED EQUIPMENT DEMOLITION, DEMOLISH EXISTING PANELS INCLUDING POWER PANELS, LIGHTING PANELS, AND PLC PANELS. TURN OVER ANY DEMOLISHED PLC EQUIPMENT TO OWNER.
5. DEMOLISH EXISTING CONDUIT AND WIRE NO LONGER IN USE IN TUNNELS. DEMOLISH BACK TO EXISTING MOTOR CONTROL CENTERS.
6. WHERE PANELS REMAIN IN SERVICE, RELABEL EXISTING DOORS AND DIRECTORIES ETC., AS SPARE.
7. SEE SHEET D-003 FOR EQUIPMENT, AND INSTRUMENTS TO BE DEMOLISHED.

EXISTING DRAWING FROM PREVIOUS PROJECT. PROPOSED WORK SHOWN BOLD, CROSSHATCHED, AND/OR CIRCLED.

TETRA TECH
www.tetratech.com
401 SOUTH WASHINGTON SQUARE, SUITE 100
LANSING, MI, 48933
PHONE: 517.316.3930, FAX: 517.484.8140

MARK	DATE	DESCRIPTION	BY
	5/29/20	ISSUED FOR BIDS	

CITY OF FLINT, MICHIGAN

FLINT WPC AERATION SYSTEM IMPROVEMENTS

AERATION TANK BATTERY "A" PIPING DEMOLITION PLANS

PROJ:	200-156238-19001
DESN:	GCJ
DRWN:	JLS
CHKD:	WAP

E-305

Copyright: Tetra Tech

Bar Measures 1 inch, otherwise drawing not to scale

5/25/2020 11:29:14 AM - \\TTS073FS1.\ROJECTS\IER\156238\200-156238-19001\CAD\SHEETFILES\IEIE-305_AERATION TANK BATTERY A DEMO_ILDWG - SHANK, JASON

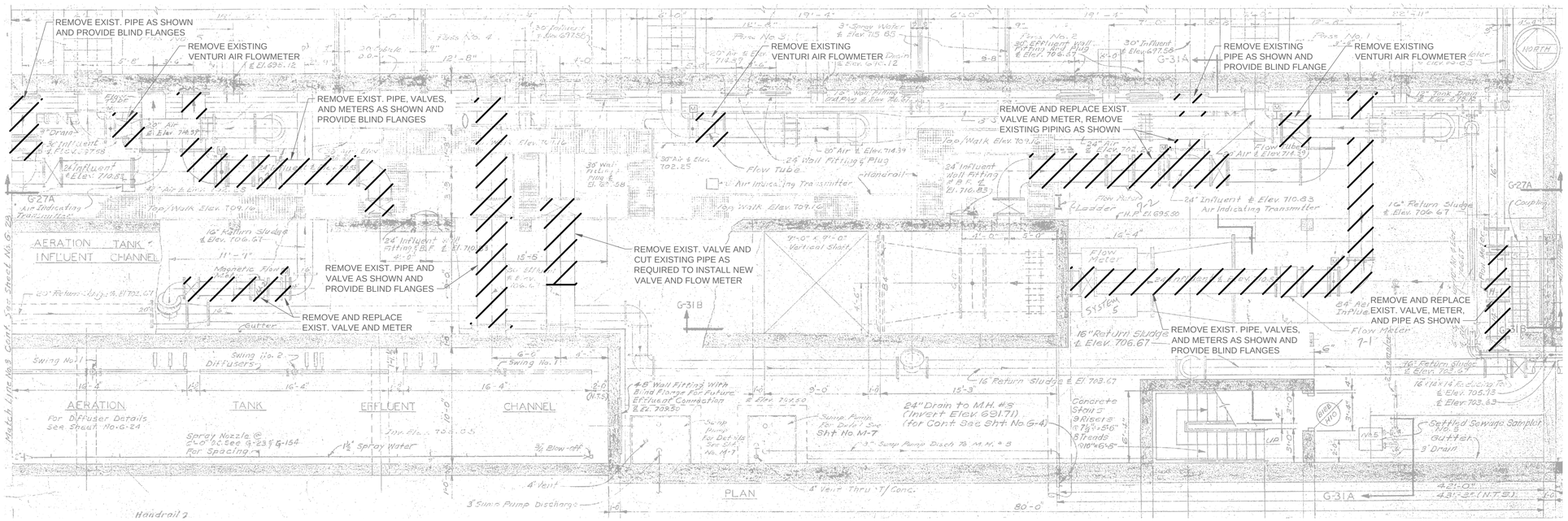

BAT B - PASS 1-5 DEMOLITION PLAN

NO SCALE

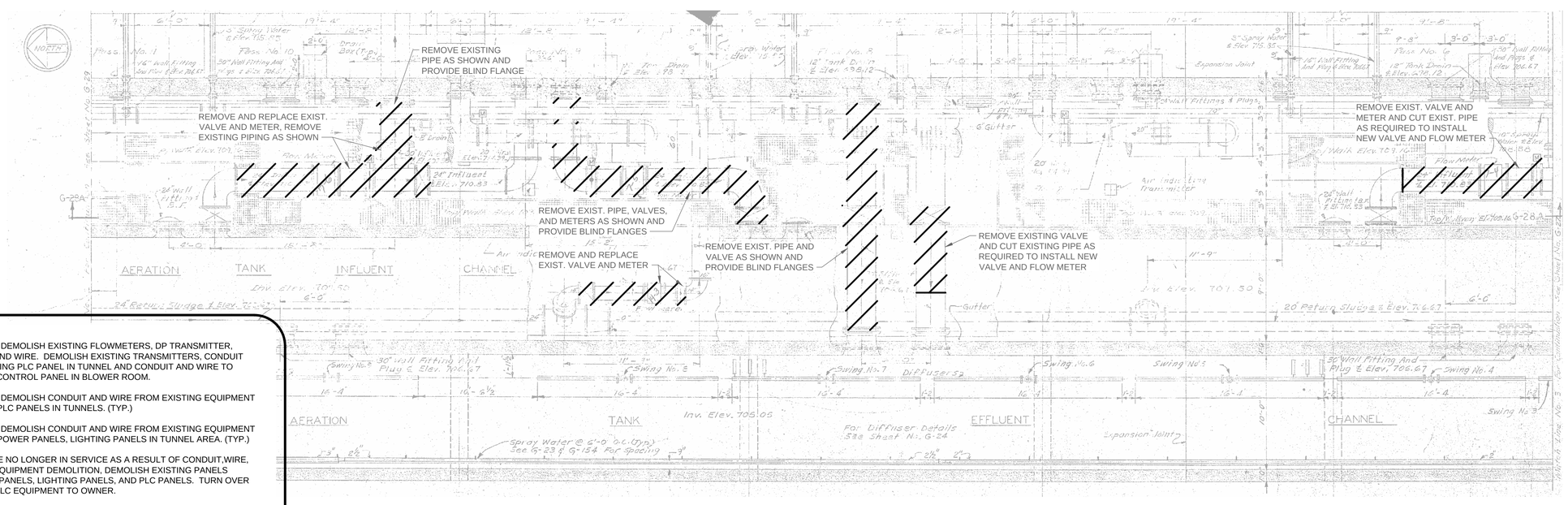

BAT B - PASS 6-11 DEMOLITION PLAN

NO SCALE

NOTES:

1. FIELD LOCATE, AND DEMOLISH EXISTING FLOWMETERS, DP TRANSMITTER, TUBING, CONDUIT AND WIRE. DEMOLISH EXISTING TRANSMITTERS, CONDUIT AND WIRE TO EXISTING PLC PANEL IN TUNNEL AND CONDUIT AND WIRE TO EXISTING BLOWER CONTROL PANEL IN BLOWER ROOM.
2. FIELD LOCATE, AND DEMOLISH CONDUIT AND WIRE FROM EXISTING EQUIPMENT BACK TO EXISTING PLC PANELS IN TUNNELS. (TYP.)
3. FIELD LOCATE, AND DEMOLISH CONDUIT AND WIRE FROM EXISTING EQUIPMENT BACK TO EXISTING POWER PANELS, LIGHTING PANELS IN TUNNEL AREA. (TYP.)
4. WHERE PANELS ARE NO LONGER IN SERVICE AS A RESULT OF CONDUIT,WIRE, AND ASSOCIATED EQUIPMENT DEMOLITION, DEMOLISH EXISTING PANELS INCLUDING POWER PANELS, LIGHTING PANELS, AND PLC PANELS. TURN OVER ANY DEMOLISHED PLC EQUIPMENT TO OWNER.
5. DEMOLISH EXISTING CONDUIT AND WIRE NO LONGER IN USE IN TUNNELS. DEMOLISH BACK TO EXISTING MOTOR CONTROL CENTERS.
6. WHERE PANELS REMAIN IN SERVICE, RELABEL EXISTING DOORS AND DIRECTORIES ETC., AS SPARE.
7. SEE SHEET D-003 FOR EQUIPMENT, AND INSTRUMENTS TO BE DEMOLISHED.

NOTE: DEMOLITION WORK SHOWN IS TYPICAL FOR BATTERY-B TANKS 3, 4, 5, PASSES 12-20.

EXISTING DRAWING FROM PREVIOUS PROJECT. PROPOSED WORK SHOWN BOLD, CROSSHATCHED, AND/OR CIRCLED.

TETRA TECH
www.tetratech.com
401 SOUTH WASHINGTON SQUARE, SUITE 100
LANSING, MI. 48933
PHONE: 517.316.3930, FAX: 517.484.8140

MARK	DATE	DESCRIPTION	BY
	5/29/20	ISSUED FOR BIDS	

CITY OF FLINT, MICHIGAN

FLINT WPC AERATION SYSTEM IMPROVEMENTS

AERATION TANK BATTERY "B" PIPING DEMOLITION PLANS

PROJ:	200-156238-19001
DESN:	GCJ
DRWN:	JLS
CHKD:	WAP

E-306

Copyright: Tetra Tech

Bar Measures 1 inch, otherwise drawing not to scale

5/25/2020 12:13:03 PM - \\TTS073FS1...ROJECTS\IER\156238\200-156238-190011\CAD\SHEETFILES\IE-306_AERATION TANK BATTERY B DEMO.DWG - SHANK, JASON

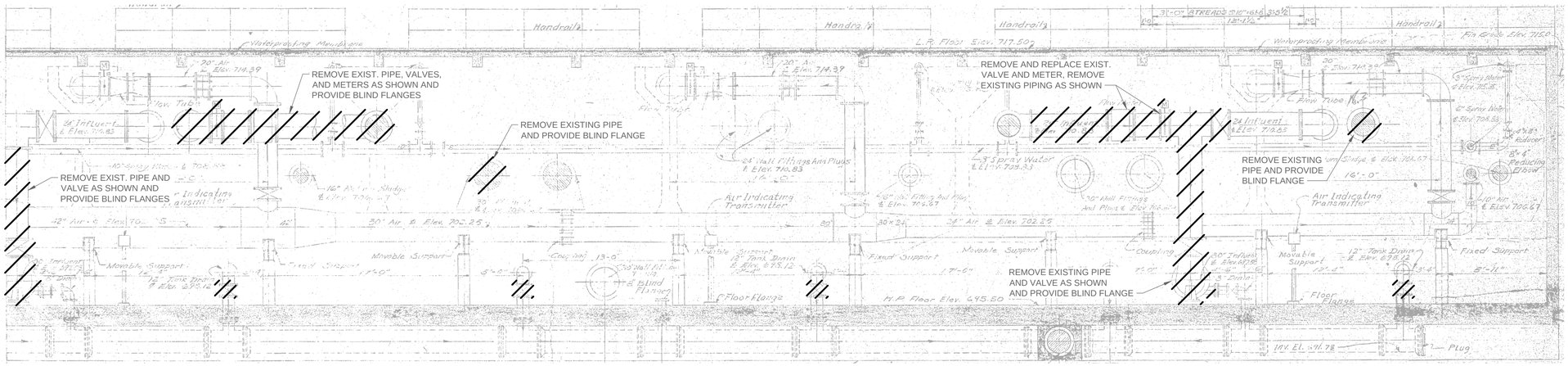

DEMOLITION SECTION - BAT B - PASS 1-5

NO SCALE

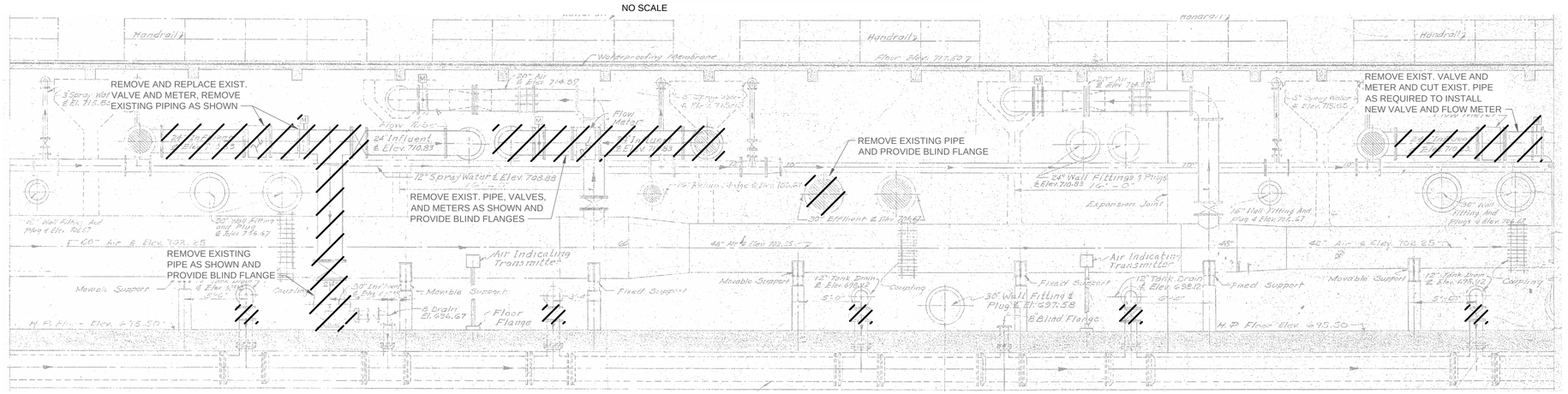

DEMOLITION SECTION - BAT B - PASS 6-11

NO SCALE

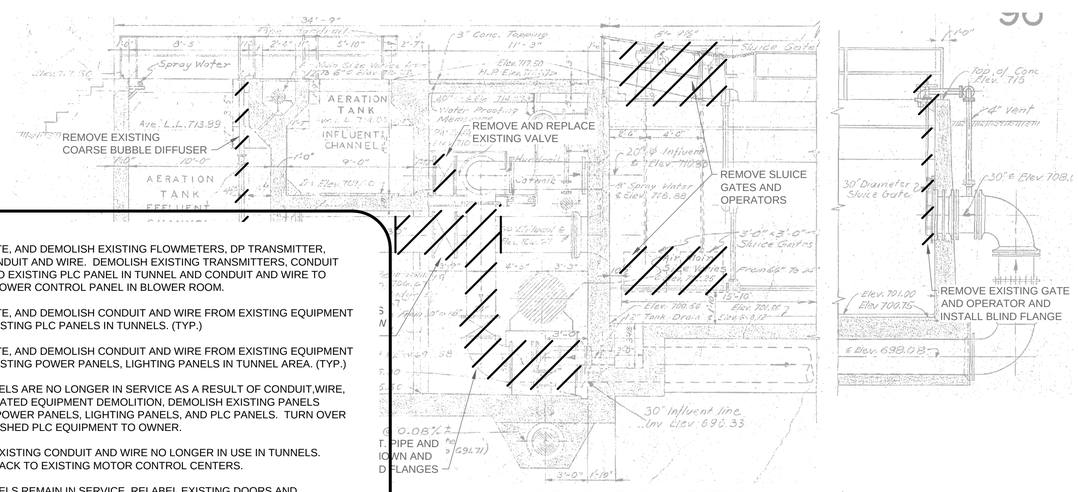

DEMOLITION SECTION

NO SCALE

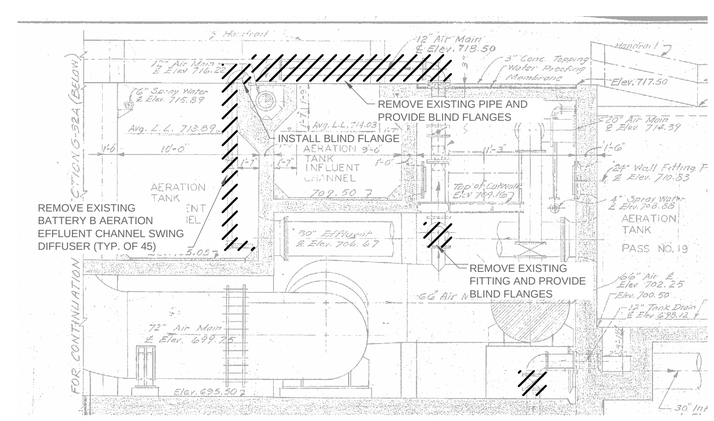

DEMOLITION SECTION - BAT B - PASS 19

NO SCALE

NOTES:

1. FIELD LOCATE, AND DEMOLISH EXISTING FLOWMETERS, DP TRANSMITTER, TUBING, CONDUIT AND WIRE. DEMOLISH EXISTING TRANSMITTERS, CONDUIT AND WIRE TO EXISTING PLC PANEL IN TUNNEL AND CONDUIT AND WIRE TO EXISTING BLOWER CONTROL PANEL IN BLOWER ROOM.
2. FIELD LOCATE, AND DEMOLISH CONDUIT AND WIRE FROM EXISTING EQUIPMENT BACK TO EXISTING PLC PANELS IN TUNNELS. (TYP.)
3. FIELD LOCATE, AND DEMOLISH CONDUIT AND WIRE FROM EXISTING EQUIPMENT BACK TO EXISTING POWER PANELS, LIGHTING PANELS IN TUNNEL AREA. (TYP.)
4. WHERE PANELS ARE NO LONGER IN SERVICE AS A RESULT OF CONDUIT,WIRE, AND ASSOCIATED EQUIPMENT DEMOLITION, DEMOLISH EXISTING PANELS INCLUDING POWER PANELS, LIGHTING PANELS, AND PLC PANELS. TURN OVER ANY DEMOLISHED PLC EQUIPMENT TO OWNER.
5. DEMOLISH EXISTING CONDUIT AND WIRE NO LONGER IN USE IN TUNNELS. DEMOLISH BACK TO EXISTING MOTOR CONTROL CENTERS.
6. WHERE PANELS REMAIN IN SERVICE, RELABEL EXISTING DOORS AND DIRECTORIES ETC., AS SPARE.
7. SEE SHEET D-003 FOR EQUIPMENT, AND INSTRUMENTS TO BE DEMOLISHED.

EXISTING DRAWING FROM PREVIOUS PROJECT. PROPOSED WORK SHOWN BOLD, CROSSHATCHED, AND/OR CIRCLED.

TETRA TECH
www.tetratech.com
401 SOUTH WASHINGTON SQUARE, SUITE 100
LANSING, MI. 48933
PHONE: 517.316.3930, FAX: 517.484.8140

MARK	DATE	DESCRIPTION	BY
	5/29/20	ISSUED FOR BIDS	

CITY OF FLINT, MICHIGAN
FLINT WPC AERATION SYSTEM IMPROVEMENTS
AERATION TANK BATTERY "B" PIPING DEMOLITION PLANS

PROJ:	200-156238-19001
DESN:	GCJ
DRWN:	JLS
CHKD:	WAP

E-307

Copyright: Tetra Tech

Bar Measures 1 inch, otherwise drawing not to scale

5/25/2020 9:11:10 AM - \\TTS073FS1...ROJECTS\IER\156238\200-156238-19001\CAD\SHEETFILES\E-307_AERATION TANK BATTERY B DEMO_II.DWG - SHANK, JASON

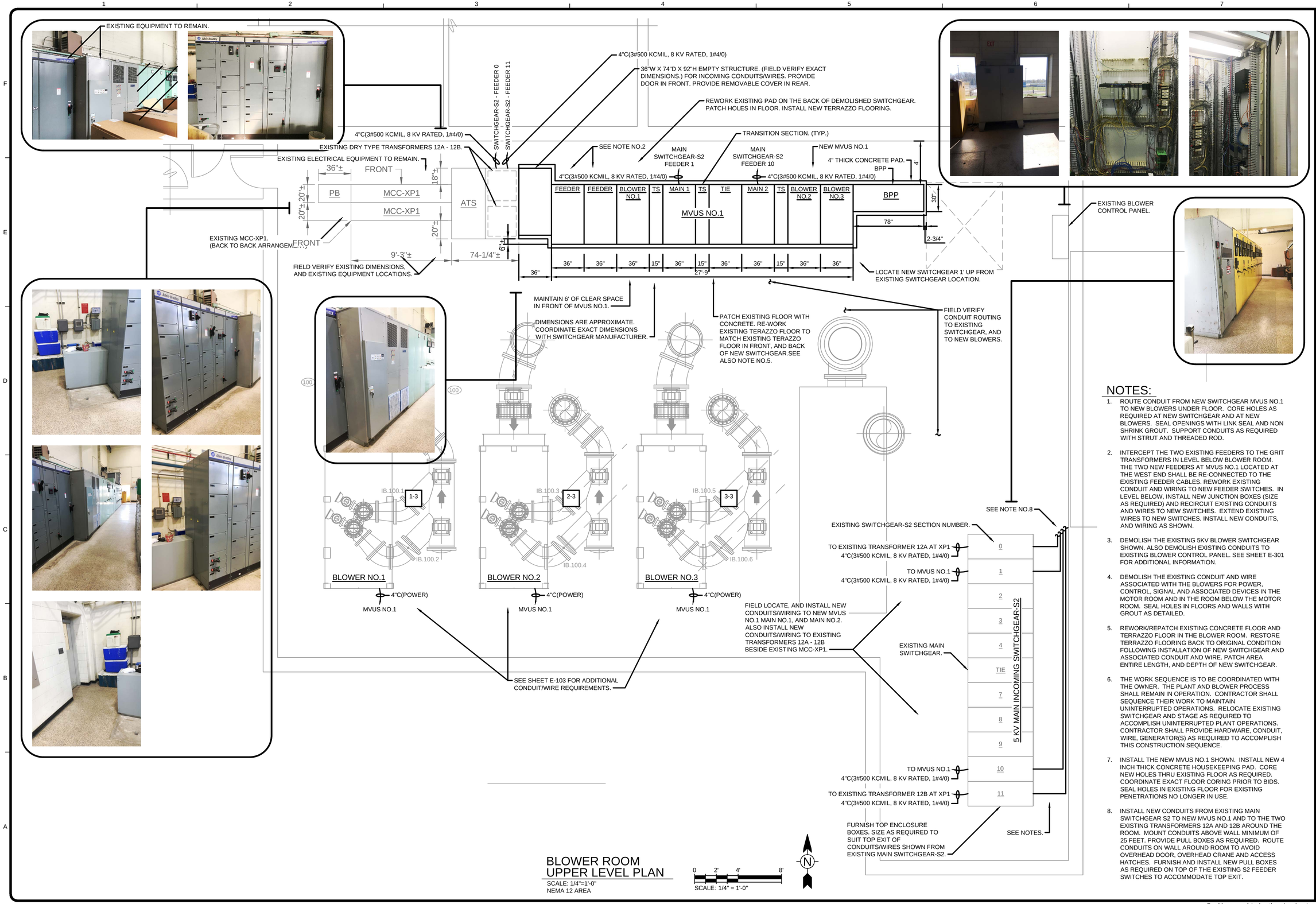

BLOWER ROOM UPPER LEVEL PLAN

SCALE: 1/4"=1'-0"
NEMA 12 AREA

NOTES:

1. ROUTE CONDUIT FROM NEW SWITCHGEAR MVUS NO.1 TO NEW BLOWERS UNDER FLOOR. CORE HOLES AS REQUIRED AT NEW SWITCHGEAR AND AT NEW BLOWERS. SEAL OPENINGS WITH LINK SEAL AND NON SHRINK GROUT. SUPPORT CONDUITS AS REQUIRED WITH STRUT AND THREADED ROD.
2. INTERCEPT THE TWO EXISTING FEEDERS TO THE GRIT TRANSFORMERS IN LEVEL BELOW BLOWER ROOM. THE TWO NEW FEEDERS AT MVUS NO.1 LOCATED AT THE WEST END SHALL BE RE-CONNECTED TO THE EXISTING FEEDER CABLES. REWORK EXISTING CONDUIT AND WIRING TO NEW FEEDER SWITCHES. IN LEVEL BELOW, INSTALL NEW JUNCTION BOXES (SIZE AS REQUIRED) AND RECIRCUIT EXISTING CONDUITS AND WIRES TO NEW SWITCHES. EXTEND EXISTING WIRES TO NEW SWITCHES. INSTALL NEW CONDUITS, AND WIRING AS SHOWN.
3. DEMOLISH THE EXISTING 5KV BLOWER SWITCHGEAR SHOWN. ALSO DEMOLISH EXISTING CONDUITS TO EXISTING BLOWER CONTROL PANEL. SEE SHEET E-301 FOR ADDITIONAL INFORMATION.
4. DEMOLISH THE EXISTING CONDUIT AND WIRE ASSOCIATED WITH THE BLOWERS FOR POWER, CONTROL, SIGNAL AND ASSOCIATED DEVICES IN THE MOTOR ROOM AND IN THE ROOM BELOW THE MOTOR ROOM. SEAL HOLES IN FLOORS AND WALLS WITH GROUT AS DETAILED.
5. REWORK/REPATCH EXISTING CONCRETE FLOOR AND TERRAZZO FLOOR IN THE BLOWER ROOM. RESTORE TERRAZZO FLOORING BACK TO ORIGINAL CONDITION FOLLOWING INSTALLATION OF NEW SWITCHGEAR AND ASSOCIATED CONDUIT AND WIRE. PATCH AREA ENTIRE LENGTH, AND DEPTH OF NEW SWITCHGEAR.
6. THE WORK SEQUENCE IS TO BE COORDINATED WITH THE OWNER. THE PLANT AND BLOWER PROCESS SHALL REMAIN IN OPERATION. CONTRACTOR SHALL SEQUENCE THEIR WORK TO MAINTAIN UNINTERRUPTED OPERATIONS. RELOCATE EXISTING SWITCHGEAR AND STAGE AS REQUIRED TO ACCOMPLISH UNINTERRUPTED PLANT OPERATIONS. CONTRACTOR SHALL PROVIDE HARDWARE, CONDUIT, WIRE, GENERATOR(S) AS REQUIRED TO ACCOMPLISH THIS CONSTRUCTION SEQUENCE.
7. INSTALL THE NEW MVUS NO.1 SHOWN. INSTALL NEW 4 INCH THICK CONCRETE HOUSEKEEPING PAD. CORE NEW HOLES THRU EXISTING FLOOR AS REQUIRED. COORDINATE EXACT FLOOR CORING PRIOR TO BIDS. SEAL HOLES IN EXISTING FLOOR FOR EXISTING PENETRATIONS NO LONGER IN USE.
8. INSTALL NEW CONDUITS FROM EXISTING MAIN SWITCHGEAR S2 TO NEW MVUS NO.1 AND TO THE TWO EXISTING TRANSFORMERS 12A AND 12B AROUND THE ROOM. MOUNT CONDUITS ABOVE WALL MINIMUM OF 25 FEET. PROVIDE PULL BOXES AS REQUIRED. ROUTE CONDUITS ON WALL AROUND ROOM TO AVOID OVERHEAD DOOR, OVERHEAD CRANE AND ACCESS HATCHES. FURNISH AND INSTALL NEW PULL BOXES AS REQUIRED ON TOP OF THE EXISTING S2 FEEDER SWITCHES TO ACCOMMODATE TOP EXIT.

TETRA TECH
www.tetratech.com
401 SOUTH WASHINGTON SQUARE, SUITE 100
LANSING, MI, 48933
PHONE: 517.316.3930, FAX: 517.484.8140

MARK	DATE	DESCRIPTION	BY
	5/29/20	ISSUED FOR BIDS	

CITY OF FLINT, MICHIGAN
FLINT WPC AERATION SYSTEM IMPROVEMENTS
BLOWER ROOM UPPER LEVEL PLAN PROPOSED WORK

PROJ:	200-156238-19001
DESN:	GCJ
DRWN:	JLS
CHKD:	WAP

E-308

Copyright: Tetra Tech

Bar Measures 1 inch, otherwise drawing not to scale

5/25/2020 12:25:23 PM - \\TTSV073FS1□ROJECTS\IER\156238\200-156238-19001\CAD\SHEETFILES\E\E-308_BLOWER ROOM UPPER LEVEL.DWG - SHANK, JASON

REFER TO ONE-LINE DIAGRAMS. COORDINATE EXACT POWER/CONTROL/SENSOR WIRING REQUIREMENTS WITH BLOWER MANUFACTURER.

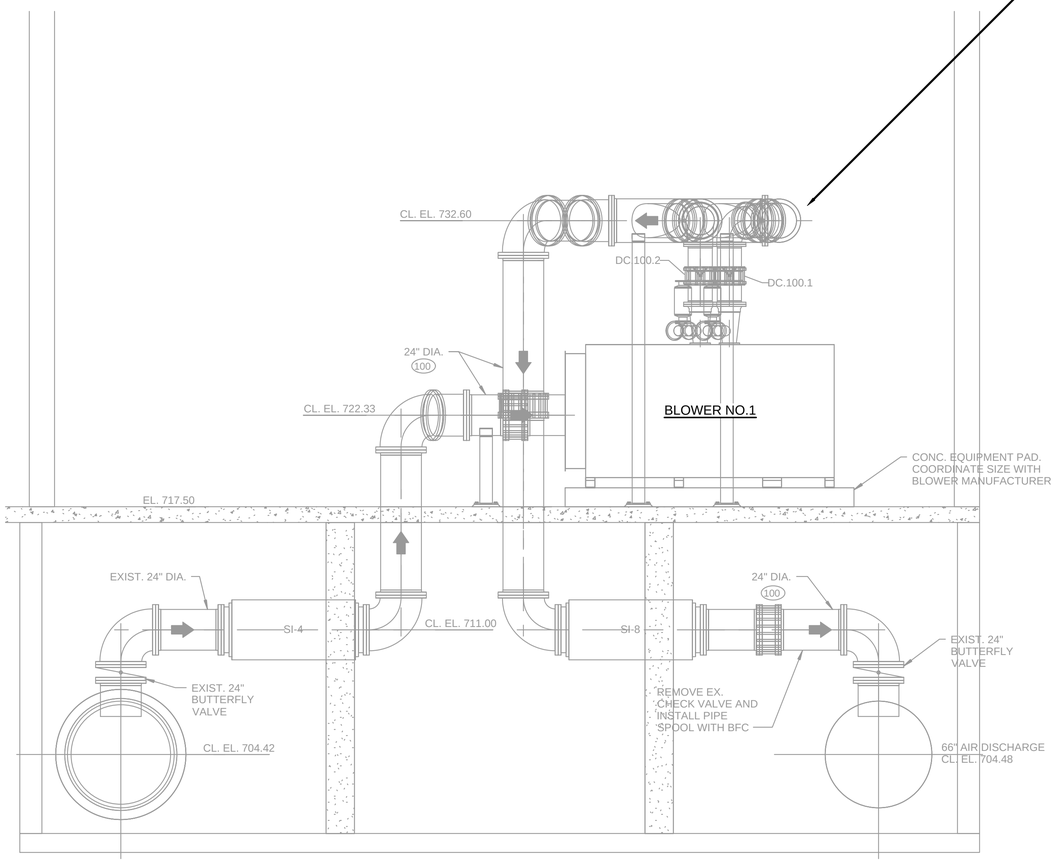

1 D-101 SECTION
SCALE: 1/4"=1'-0"

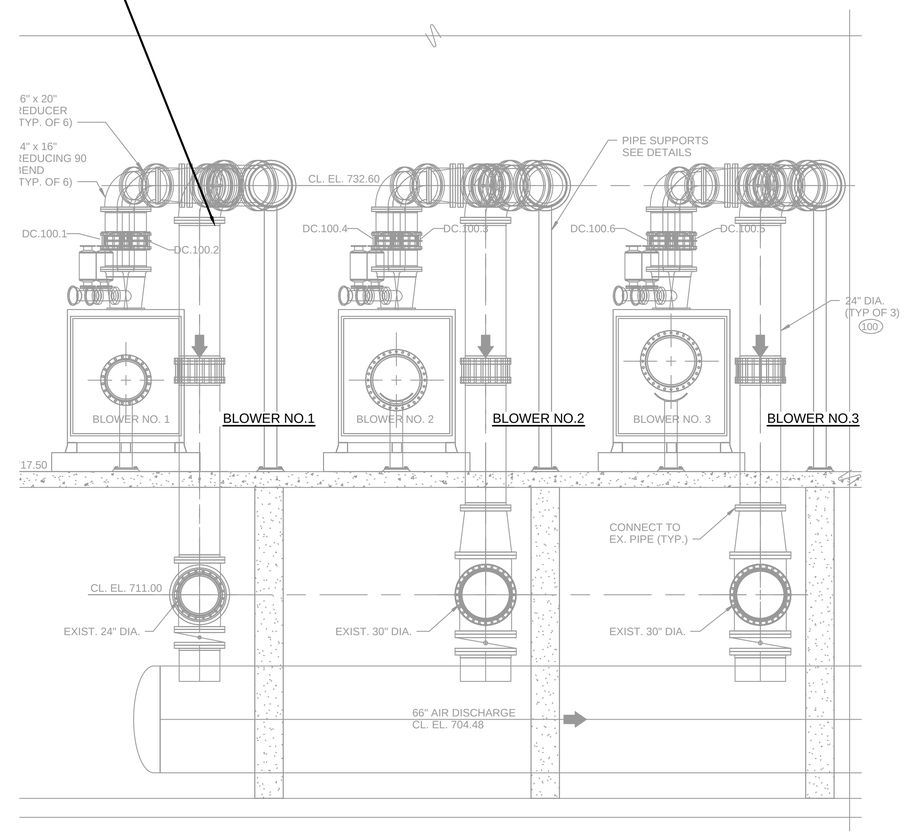

2 D-101 SECTION
SCALE: 1/4"=1'-0"

BLOWER ROOM SECTIONS

0 2' 4' 8'
SCALE: 1/4" = 1'-0"

TETRA TECH
www.tetratech.com
401 SOUTH WASHINGTON SQUARE, SUITE 100
LANSING, MI, 48933
PHONE: 517.316.3930, FAX: 517.484.8140

MARK	DATE	DESCRIPTION	BY
	5/29/20	ISSUED FOR BIDS	

CITY OF FLINT, MICHIGAN
FLINT WPC AERATION SYSTEM IMPROVEMENTS
BLOWER ROOM SECTIONS

PROJ:	200-156238-19001
DESN:	GCJ
DRWN:	JLS
CHKD:	WAP

E-309

Copyright: Tetra Tech

Bar Measures 1 inch, otherwise drawing not to scale

5/25/2020 9:15:31 AM - \\TTS073FS1\PROJECTS\IER\156238\200-156238-19001\CAD\SHEETFILES\E-309_BLOWER ROOM SECTIONS.DWG - SHANK, JASON

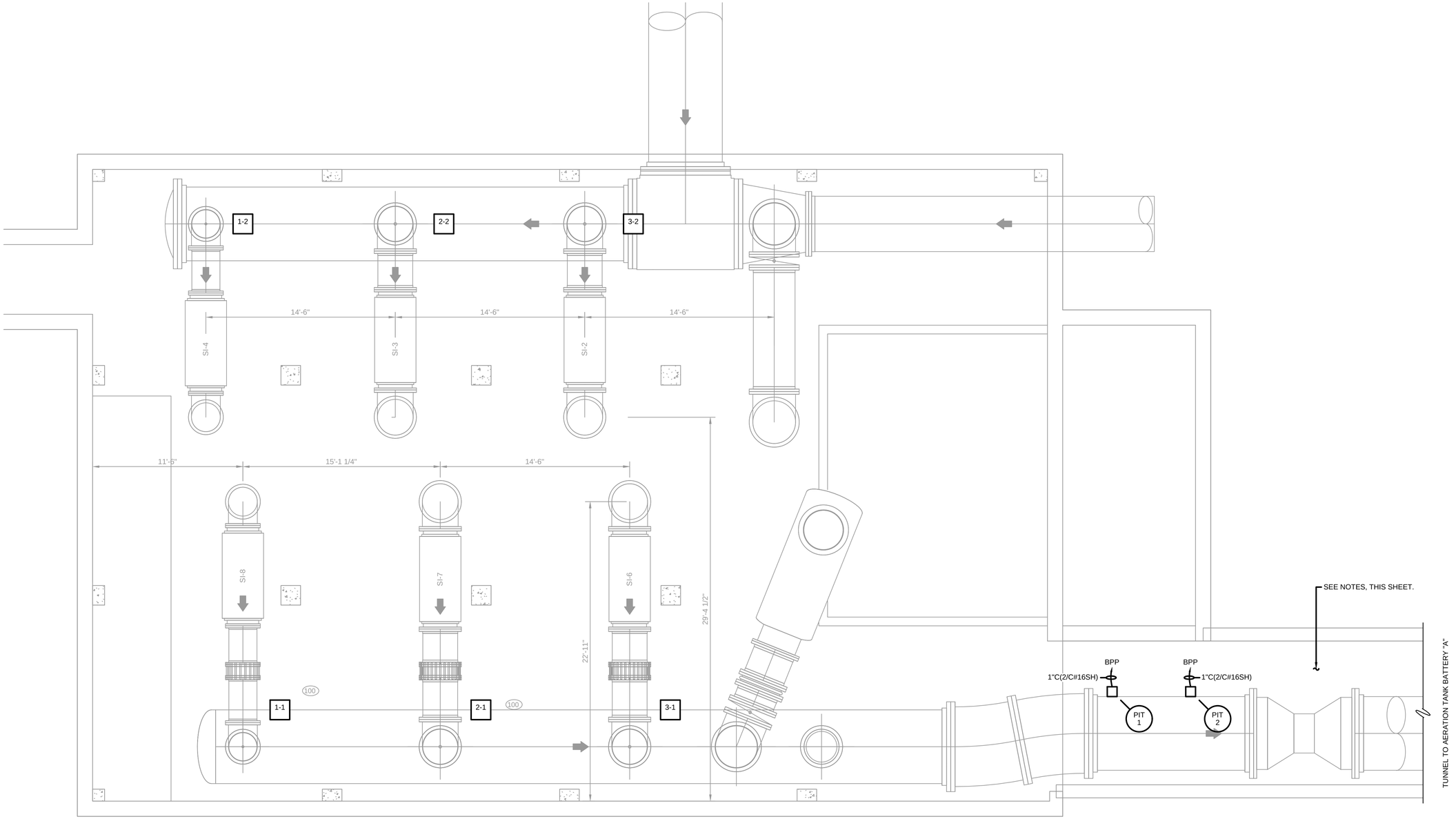

NOTES:

1. FIELD VERIFY NEW CONDUIT ROUTING FROM BATTERY A AERATION TANKS TO MCC-XP1. INSTALL NEW CONDUIT, JUNCTION BOXES, AND WIRING AS SHOWN.
2. SEAL CONDUITS WITH DUCT SEAL AT EACH ACTUATOR, DISCONNECT SWITCH, AND JUNCTION BOX.
3. CONTRACTOR TO FIELD LOCATE CONDUIT ROUTING IN TUNNELS BETWEEN AERATION TANKS AND THE MOTOR CONTROL CENTERS IN THE BLOWER ROOM AND THE EQUIPMENT BUILDING.
4. CONDUIT SHALL BE MOUNTED ON 316 STAINLESS STEEL STRUT. CONDUIT MAY BE INSTALLED ON CEILINGS WITH RACKS AND THREADED ROD OR ON WALLS. MATCH EXISTING CONDUIT MOUNTING HEIGHTS.
5. DISCONNECT SWITCHES AND PUSHBUTTON STATIONS FOR MOTORIZED VALVE ACTUATORS SHALL BE MOUNTED ON 316 STAINLESS STEEL STRUT SUPPORT RACK. SECURE RACK TO FLOOR AND WALL AS REQUIRED. LOCATE PUSHBUTTON STATION AND DISCONNECT SWITCH ON RACK 5 FEET AFF. TYPICAL FOR BATTERY A AND BATTERY B TUNNEL AREAS AERATION TANKS.

BLOWER ROOM LOWER LEVEL PLAN

SCALE: 1/4"=1'-0"
NEMA 4 AREA

0 2' 4' 8'
SCALE: 1/4" = 1'-0"

N

TETRA TECH
www.tetratech.com
401 SOUTH WASHINGTON SQUARE, SUITE 100
LANSING, MI, 48933
PHONE: 517.316.3930, FAX: 517.484.8140

MARK	DATE	DESCRIPTION	BY
	5/29/20	ISSUED FOR BIDS	

CITY OF FLINT, MICHIGAN
FLINT WPC AERATION SYSTEM IMPROVEMENTS
BLOWER ROOM
FIRST FLOOR PLAN
PROPOSED WORK

PROJ:	200-156238-19001
DESN:	GCJ
DRWN:	JLS
CHKD:	WAP

E-310

Copyright: Tetra Tech

Bar Measures 1 inch, otherwise drawing not to scale

5/25/2020 9:17:55 AM - \\TTS073FS1...ROJECTS\IER\156238\200-156238-19001\CAD\SHEETFILES\E-310_BLOWER ROOM FIRST FLOOR PLAN.DWG - SHANK, JASON

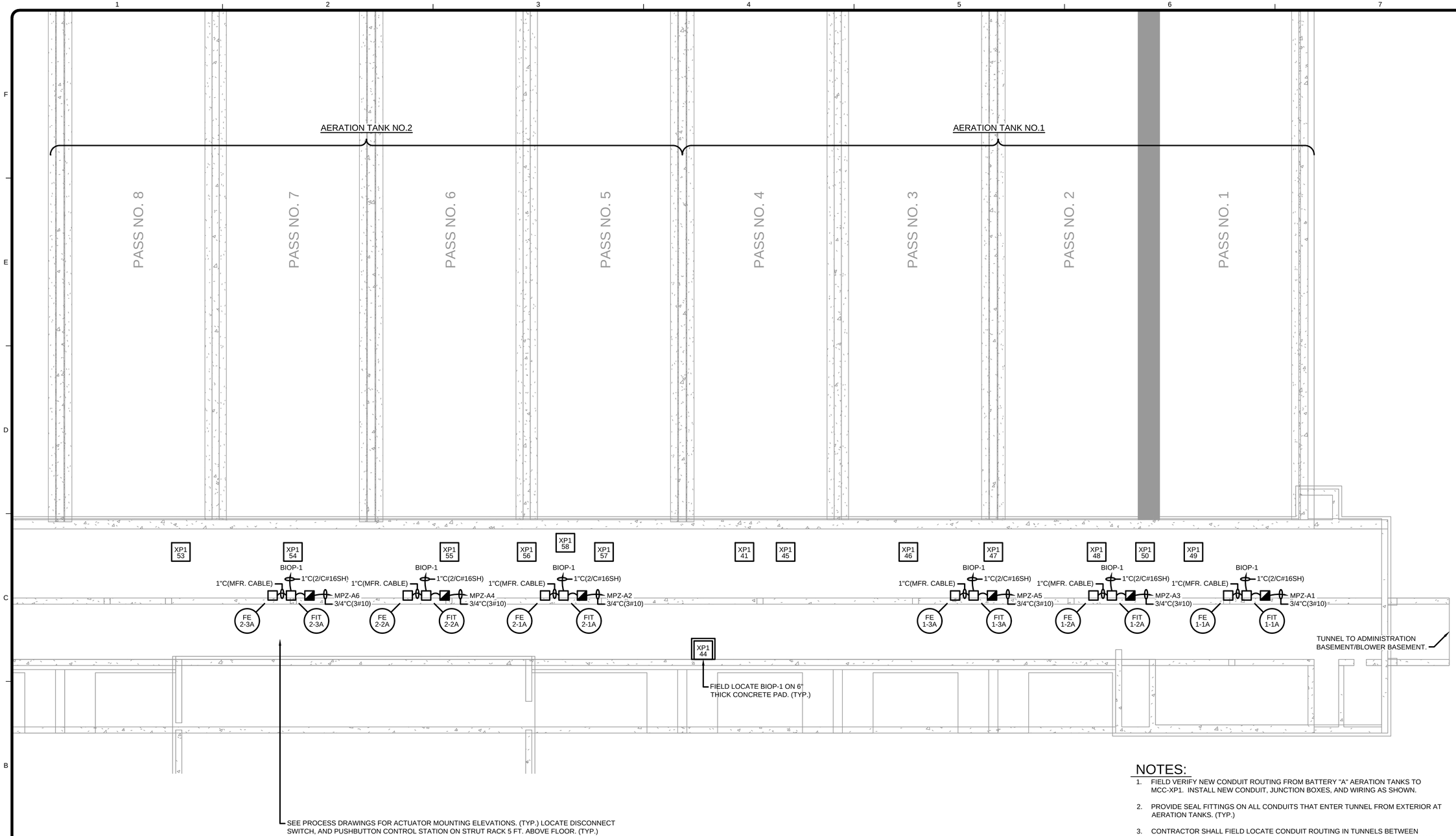

BATTERY "A" TANKS, AND GALLERY ELECTRICAL BACKGROUND PLAN

SCALE: 1/8"=1'-0"
NEMA 4 AREA - SEE NOTE NO.2

0 4' 8' 16'
SCALE: 1/8" = 1'-0"

N

NOTES:

1. FIELD VERIFY NEW CONDUIT ROUTING FROM BATTERY "A" AERATION TANKS TO MCC-XP1. INSTALL NEW CONDUIT, JUNCTION BOXES, AND WIRING AS SHOWN.
2. PROVIDE SEAL FITTINGS ON ALL CONDUITS THAT ENTER TUNNEL FROM EXTERIOR AT AERATION TANKS. (TYP.)
3. CONTRACTOR SHALL FIELD LOCATE CONDUIT ROUTING IN TUNNELS BETWEEN AERATION TANKS AND THE MOTOR CONTROL CENTERS IN THE BLOWER ROOM AND THE EQUIPMENT BUILDING.
4. CONDUIT SHALL BE MOUNTED ON 316 STAINLESS STEEL STRUT. CONDUIT MAY BE INSTALLED ON CEILINGS WITH RACKS AND THREADED ROD OR ON WALLS. MATCH EXISTING CONDUIT MOUNTING HEIGHTS.
5. DISCONNECT SWITCHES AND PUSHBUTTON STATIONS FOR MOTORIZED VALVE ACTUATORS SHALL BE MOUNTED ON 316 STAINLESS STEEL STRUT SUPPORT RACK. SECURE RACK TO FLOOR AND WALL AS REQUIRED. LOCATE PUSHBUTTON STATION AND DISCONNECT SWITCH ON RACK 5 FEET AFF. TYPICAL FOR BATTERY A AND BATTERY B TUNNEL AREAS AERATION TANKS.
6. INSTALL NEW FLOW TRANSMITTERS ON A STRUT SUPPORT RACK. MOUNT TOWARDS CENTER OF GALLERY. LOCATED DISCONNECT SWITCHES FOR ACTUATORS ON STRUT SUPPORT RACK OF WALL. MOUNT PUSHBUTTON STATIONS ON STRUT RACK NEAR FLOW TRANSMITTERS. INSTALL DESCRIPTIVE NAMETAGS FOR ALL FLOW TRANSMITTERS, PUSHBUTTON STATIONS AND DISCONNECT SWITCHES.

TETRA TECH
www.tetratech.com
401 SOUTH WASHINGTON SQUARE, SUITE 100
LANSING, MI, 48933
PHONE: 517.316.3930, FAX: 517.484.8140

MARK	DATE	DESCRIPTION	BY
	5/29/20	ISSUED FOR BIDS	

CITY OF FLINT, MICHIGAN
FLINT WPC AERATION SYSTEM IMPROVEMENTS
BATTERY "A" TANKS, AND GALLERY ELECTRICAL PLAN

PROJ:	200-156238-19001
DESN:	GCJ
DRWN:	JLS
CHKD:	WAP

E-311

Copyright: Tetra Tech

Bar Measures 1 inch, otherwise drawing not to scale

5/26/2020 10:32:39 PM - \\TTS073FS1\PROJECTS\IER\156238\200-156238-19001\CAD\SHEETFILES\EE-311_BATT A GALLERY PLAN.DWG - SHANK, JASON

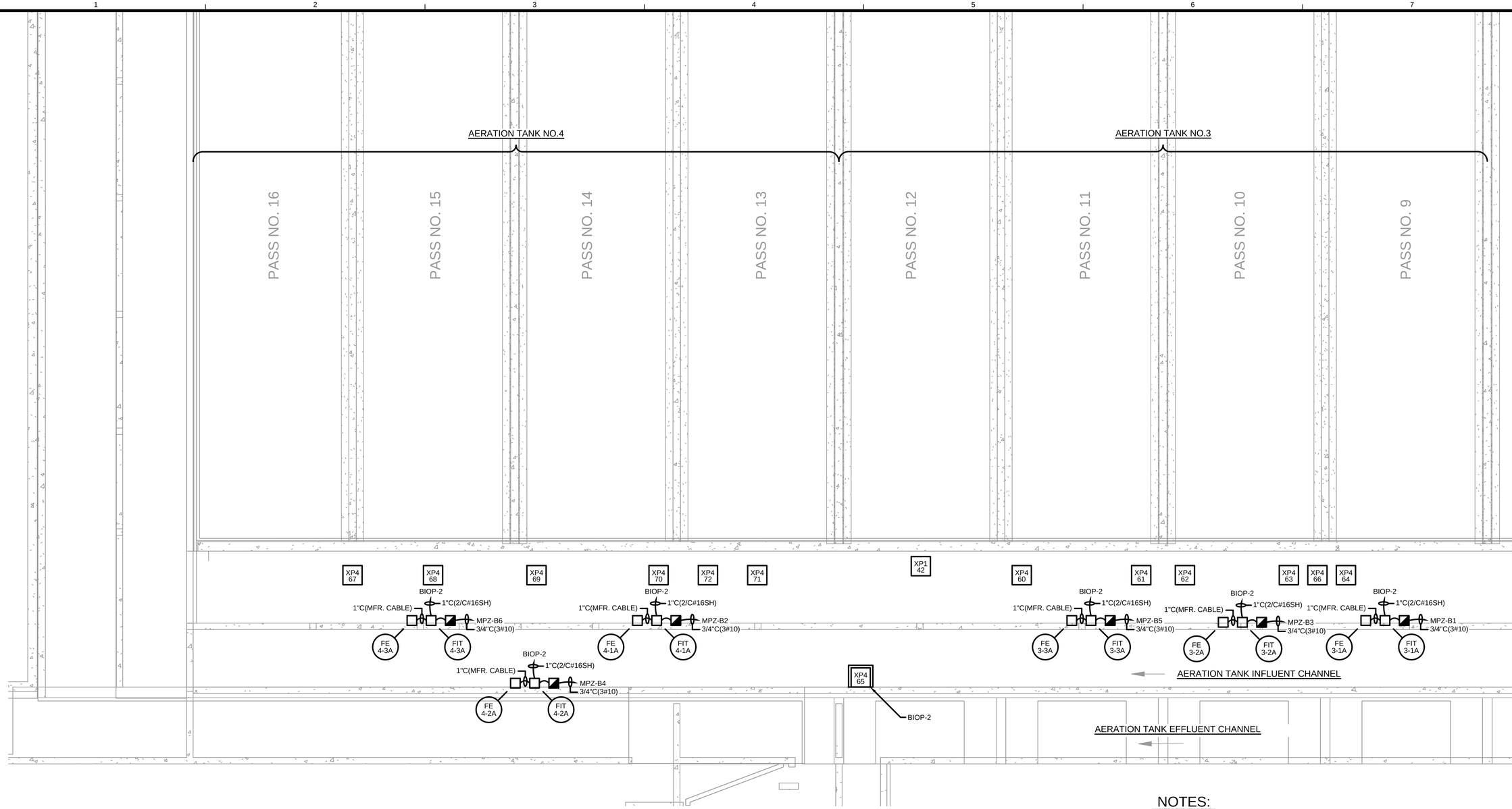

NOTES:

1. FIELD VERIFY NEW CONDUIT ROUTING FROM BATTERY "A" AERATION TANKS TO MCC-XP1, AND XP4. INSTALL NEW CONDUIT, JUNCTION BOXES, AND WIRING AS SHOWN.
2. PROVIDE SEAL FITTINGS ON ALL CONDUITS THAT ENTER TUNNEL FROM EXTERIOR AT AERATION TANKS. (TYP.)
3. CONTRACTOR SHALL FIELD LOCATE CONDUIT ROUTING IN TUNNELS BETWEEN AERATION TANKS AND THE MOTOR CONTROL CENTERS IN THE BLOWER ROOM AND THE EQUIPMENT BUILDING.
4. CONDUIT SHALL BE MOUNTED ON 316 STAINLESS STEEL STRUT. CONDUIT MAY BE INSTALLED ON CEILINGS WITH RACKS AND THREADED ROD OR ON WALLS. MATCH EXISTING CONDUIT MOUNTING HEIGHTS.
5. DISCONNECT SWITCHES AND PUSHBUTTON STATIONS FOR MOTORIZED VALVE ACTUATORS SHALL BE MOUNTED ON 316 STAINLESS STEEL STRUT SUPPORT RACK. SECURE RACK TO FLOOR AND WALL AS REQUIRED. LOCATE PUSHBUTTON STATION AND DISCONNECT SWITCH ON RACK 5 FEET AFF. TYPICAL FOR BATTERY A AND BATTERY B TUNNEL AREAS AERATION TANKS.
6. INSTALL NEW FLOW TRANSMITTERS ON A STRUT SUPPORT RACK. MOUNT TOWARDS CENTER OF GALLERY. LOCATED DISCONNECT SWITCHES FOR ACTUATORS ON STRUT SUPPORT RACK OF WALL. MOUNT PUSHBUTTON STATIONS ON STRUT RACK NEAR FLOW TRANSMITTERS. INSTALL DESCRIPTIVE NAMETAGS FOR ALL FLOW TRANSMITTERS, PUSHBUTTON STATIONS AND DISCONNECT SWITCHES.

BATTERY "A" TANKS, AND GALLERY ELECTRICAL BACKGROUND PLAN

SCALE: 1/8"=1'-0"
NEMA 4 AREA

0 4' 8' 16'
SCALE: 1/8" = 1'-0"

N

TETRA TECH
www.tetratech.com
401 SOUTH WASHINGTON SQUARE, SUITE 100
LANSING, MI. 48933
PHONE: 517.316.3930, FAX: 517.484.8140

MARK	DATE	DESCRIPTION	BY
	5/29/20	ISSUED FOR BIDS	

CITY OF FLINT, MICHIGAN
FLINT WPC AERATION SYSTEM IMPROVEMENTS
BATTERY "A" TANKS, AND GALLERY ELECTRICAL PLAN

PROJ:	200-156238-19001
DESN:	GCJ
DRWN:	JLS
CHKD:	WAP

E-312

Copyright: Tetra Tech

Bar Measures 1 inch, otherwise drawing not to scale

5/26/2020 10:36:30 PM - \\TTS073FS1\PROJECTS\IER\156238\200-156238-190001\CAD\SHEETFILES\EE-312_BATT A GALLERY PLAN_II.DWG - SHANK, JASON

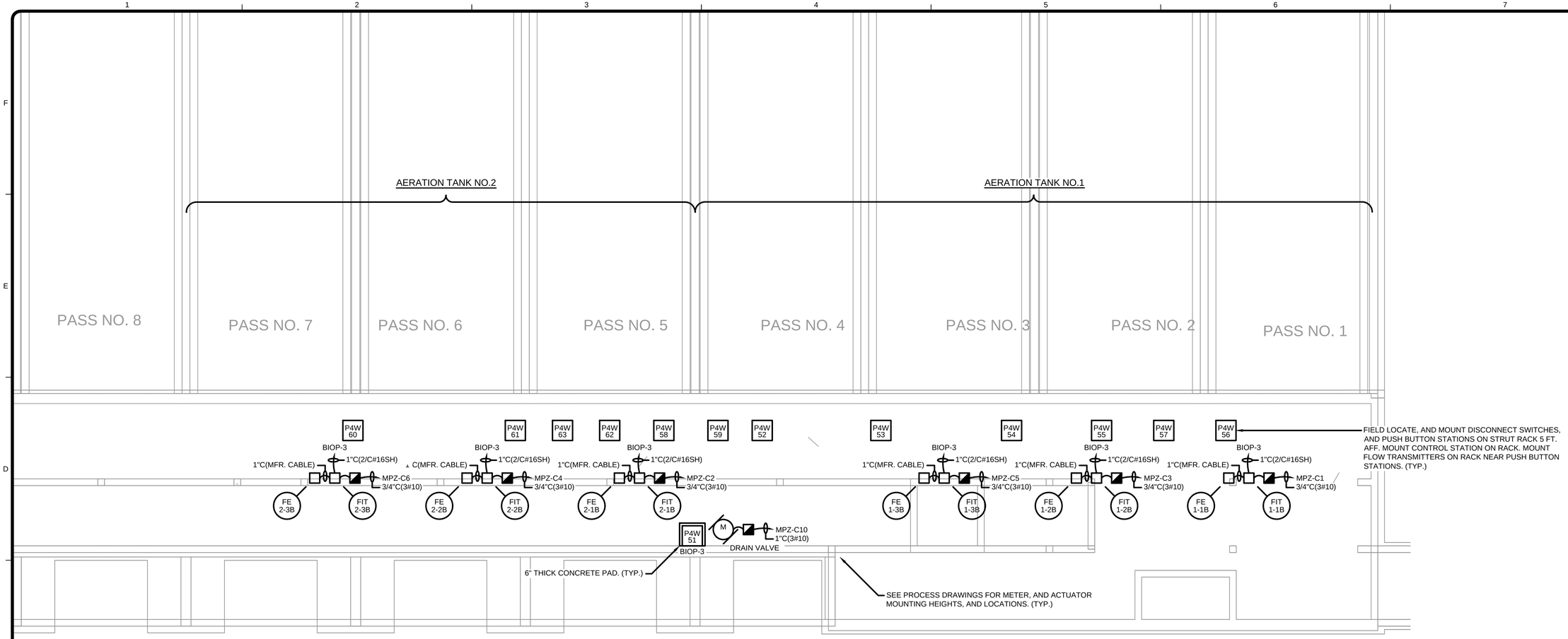

NOTES:

1. FIELD VERIFY NEW CONDUIT ROUTING FROM BATTERY "B" AERATION TANKS TO MCC-P4E/P4W. INSTALL NEW CONDUIT, JUNCTION BOXES, AND WIRING AS SHOWN.
2. PROVIDE SEAL FITTINGS ON ALL CONDUITS THAT ENTER TUNNEL FROM EXTERIOR AT AERATION TANKS. (TYP.)
3. CONTRACTOR SHALL FIELD LOCATE CONDUIT ROUTING IN TUNNELS BETWEEN AERATION TANKS AND THE MOTOR CONTROL CENTERS IN THE BLOWER ROOM AND THE EQUIPMENT BUILDING.
4. CONDUIT SHALL BE MOUNTED ON 316 STAINLESS STEEL STRUT. CONDUIT MAY BE INSTALLED ON CEILINGS WITH RACKS AND THREADED ROD OR ON WALLS. MATCH EXISTING CONDUIT MOUNTING HEIGHTS.
5. DISCONNECT SWITCHES AND PUSHBUTTON STATIONS FOR MOTORIZED VALVE ACTUATORS SHALL BE MOUNTED ON 316 STAINLESS STEEL STRUT SUPPORT RACK. SECURE RACK TO FLOOR AND WALL AS REQUIRED. LOCATE PUSHBUTTON STATION AND DISCONNECT SWITCH ON RACK 5 FEET AFF. TYPICAL FOR BATTERY A AND BATTERY B TUNNEL AREAS AERATION TANKS.
6. INSTALL NEW FLOW TRANSMITTERS ON A STRUT SUPPORT RACK. MOUNT TOWARDS CENTER OF GALLERY. LOCATED DISCONNECT SWITCHES FOR ACTUATORS ON STRUT SUPPORT RACK OF WALL. MOUNT PUSHBUTTON STATIONS ON STRUT RACK NEAR FLOW TRANSMITTERS. INSTALL DESCRIPTIVE NAMETAGS FOR ALL FLOW TRANSMITTERS, PUSHBUTTON STATIONS AND DISCONNECT SWITCHES.

BATTERY "B" TANKS, AND GALLERY ELECTRICAL BACKGROUND PLAN

SCALE: 1/8"=1'-0"
NEMA 4 AREA - SEE NOTE NO.2

0 4' 8' 16'
SCALE: 1/8" = 1'-0"

N

TETRA TECH
www.tetratech.com
401 SOUTH WASHINGTON SQUARE, SUITE 100
LANSING, MI. 48933
PHONE: 517.316.3930, FAX: 517.484.8140

MARK	DATE	DESCRIPTION	BY
	5/29/20	ISSUED FOR BIDS	

CITY OF FLINT, MICHIGAN
FLINT WPC AERATION SYSTEM IMPROVEMENTS
BATTERY "B" TANKS, AND GALLERY ELECTRICAL PLAN

PROJ:	200-156238-19001
DESN:	GCJ
DRWN:	JLS
CHKD:	WAP

E-313

Copyright: Tetra Tech

Bar Measures 1 inch, otherwise drawing not to scale

5/26/2020 10:39:04 PM - \\TTSV73FS1□ROJECTS\IER\156238\200-156238-19001\CAD\SHEETFILES\E\E-313_BATT B GALLERY PLAN.DWG - SHANK, JASON

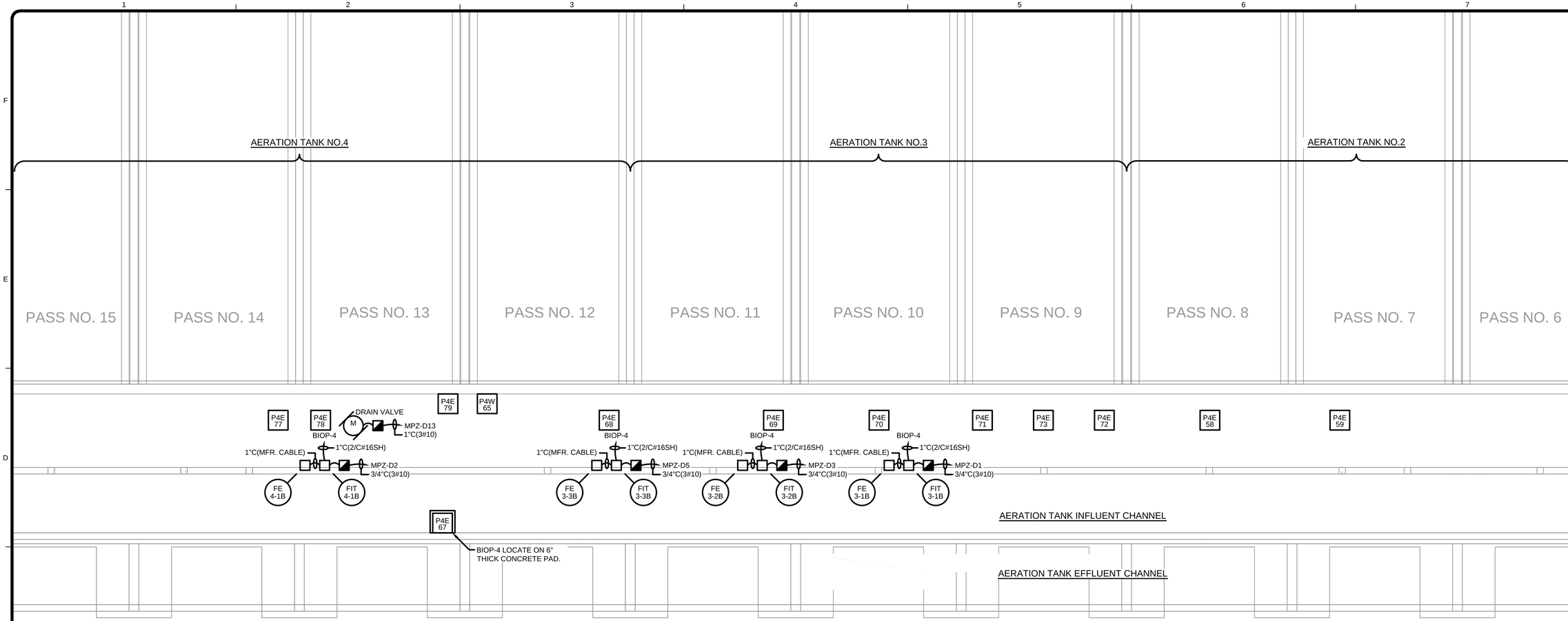

BATTERY "B" TANKS, AND GALLERY ELECTRICAL BACKGROUND PLAN

SCALE: 1/8"=1'-0"
NEMA 4 AREA - SEE NOTE NO.2

0 4' 8' 16'
SCALE: 1/8" = 1'-0"

N

NOTES:

1. FIELD VERIFY NEW CONDUIT ROUTING FROM BATTERY "B" AERATION TANKS TO MCC-P4E/P4W. INSTALL NEW CONDUIT, JUNCTION BOXES, AND WIRING AS SHOWN.
2. PROVIDE SEAL FITTINGS ON ALL CONDUITS THAT ENTER TUNNEL FROM EXTERIOR AT AERATION TANKS. (TYP.)
3. CONTRACTOR SHALL FIELD LOCATE CONDUIT ROUTING IN TUNNELS BETWEEN AERATION TANKS AND THE MOTOR CONTROL CENTERS IN THE BLOWER ROOM AND THE EQUIPMENT BUILDING.
4. CONDUIT SHALL BE MOUNTED ON 316 STAINLESS STEEL STRUT. CONDUIT MAY BE INSTALLED ON CEILINGS WITH RACKS AND THREADED ROD OR ON WALLS. MATCH EXISTING CONDUIT MOUNTING HEIGHTS.
5. DISCONNECT SWITCHES AND PUSHBUTTON STATIONS FOR MOTORIZED VALVE ACTUATORS SHALL BE MOUNTED ON 316 STAINLESS STEEL STRUT SUPPORT RACK. SECURE RACK TO FLOOR AND WALL AS REQUIRED. LOCATE PUSHBUTTON STATION AND DISCONNECT SWITCH ON RACK 5 FEET AFF. TYPICAL FOR BATTERY A AND BATTERY B TUNNEL AREAS AERATION TANKS.
6. INSTALL NEW FLOW TRANSMITTERS ON A STRUT SUPPORT RACK. MOUNT TOWARDS CENTER OF GALLERY. LOCATED DISCONNECT SWITCHES FOR ACTUATORS ON STRUT SUPPORT RACK OF WALL. MOUNT PUSHBUTTON STATIONS ON STRUT RACK NEAR FLOW TRANSMITTERS. INSTALL DESCRIPTIVE NAMETAGS FOR ALL FLOW TRANSMITTERS, PUSHBUTTON STATIONS AND DISCONNECT SWITCHES.

TETRA TECH
www.tetratech.com
401 SOUTH WASHINGTON SQUARE, SUITE 100
LANSING, MI. 48933
PHONE: 517.316.3930, FAX: 517.484.8140

MARK	DATE	DESCRIPTION	BY
	5/29/20	ISSUED FOR BIDS	

CITY OF FLINT, MICHIGAN
FLINT WPC AERATION SYSTEM IMPROVEMENTS
BATTERY "B" TANKS, AND GALLERY ELECTRICAL PLAN

PROJ:	200-156238-19001
DESN:	GCJ
DRWN:	JLS
CHKD:	WAP

E-314

Copyright: Tetra Tech

Bar Measures 1 inch, otherwise drawing not to scale

5/26/2020 10:42:08 PM - \\TTS073FS1\PROJECTS\IER\156238\200-156238-19001\CAD\SHEETFILES\E\E-314_BATT B GALLERY PLAN_II.DWG - SHANK, JASON

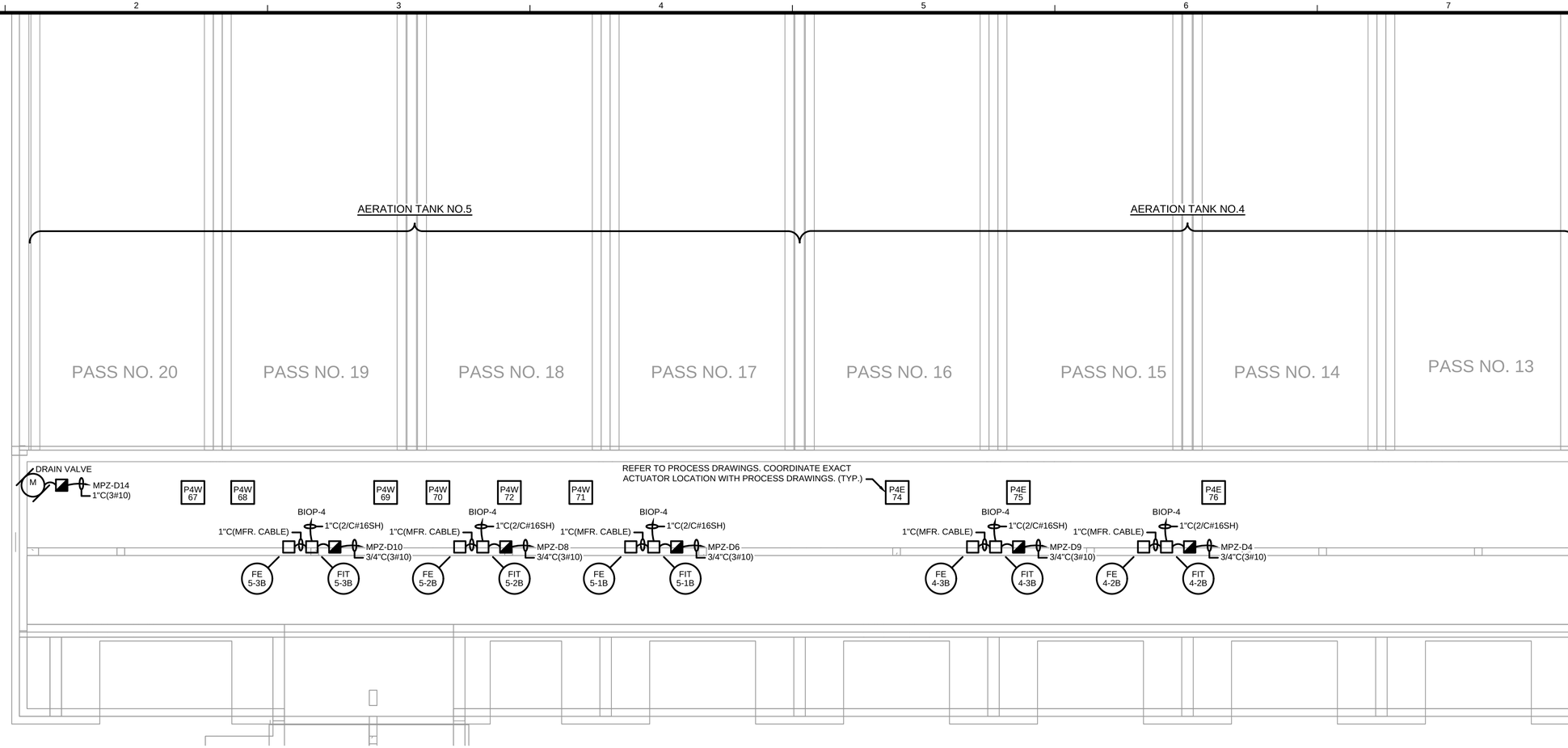

NOTES:

1. FIELD VERIFY NEW CONDUIT ROUTING FROM BATTERY "B" AERATION TANKS TO MCC-P4E/P4W. INSTALL NEW CONDUIT, JUNCTION BOXES, AND WIRING AS SHOWN.
2. PROVIDE SEAL FITTINGS ON ALL CONDUITS THAT ENTER TUNNEL FROM EXTERIOR AT AERATION TANKS. (TYP.)
3. CONTRACTOR SHALL FIELD LOCATE CONDUIT ROUTING IN TUNNELS BETWEEN AERATION TANKS AND THE MOTOR CONTROL CENTERS IN THE BLOWER ROOM AND THE EQUIPMENT BUILDING.
4. CONDUIT SHALL BE MOUNTED ON 316 STAINLESS STEEL STRUT. CONDUIT MAY BE INSTALLED ON CEILINGS WITH RACKS AND THREADED ROD OR ON WALLS. MATCH EXISTING CONDUIT MOUNTING HEIGHTS.
5. DISCONNECT SWITCHES AND PUSHBUTTON STATIONS FOR MOTORIZED VALVE ACTUATORS SHALL BE MOUNTED ON 316 STAINLESS STEEL STRUT SUPPORT RACK. SECURE RACK TO FLOOR AND WALL AS REQUIRED. LOCATE PUSHBUTTON STATION AND DISCONNECT SWITCH ON RACK 5 FEET AFF. TYPICAL FOR BATTERY A AND BATTERY B TUNNEL AREAS AERATION TANKS.
6. INSTALL NEW FLOW TRANSMITTERS ON A STRUT SUPPORT RACK. MOUNT TOWARDS CENTER OF GALLERY. LOCATED DISCONNECT SWITCHES FOR ACTUATORS ON STRUT SUPPORT RACK OF WALL. MOUNT PUSHBUTTON STATIONS ON STRUT RACK NEAR FLOW TRANSMITTERS. INSTALL DESCRIPTIVE NAMETAGS FOR ALL FLOW TRANSMITTERS, PUSHBUTTON STATIONS AND DISCONNECT SWITCHES.

BATTERY "B" TANKS, AND GALLERY ELECTRICAL BACKGROUND PLAN

SCALE: 1/8"=1'-0"
NEMA 4 AREA - SEE NOTE NO.2

0 4' 8' 16'
SCALE: 1/8" = 1'-0"

N

TETRA TECH
www.tetratech.com
401 SOUTH WASHINGTON SQUARE, SUITE 100
LANSING, MI. 48933
PHONE: 517.316.3930, FAX: 517.484.8140

MARK	DATE	DESCRIPTION	BY
	5/29/20	ISSUED FOR BIDS	

CITY OF FLINT, MICHIGAN
FLINT WPC AERATION SYSTEM IMPROVEMENTS
BATTERY "B" TANKS, AND GALLERY ELECTRICAL PLAN

PROJ:	200-156238-19001
DESN:	GCJ
DRWN:	JLS
CHKD:	WAP

E-315

Copyright: Tetra Tech

Bar Measures 1 inch, otherwise drawing not to scale

5/26/2020 10:44:40 PM - \\TTSO73FS1□ROJECTS\IER\156238\200-156238-19001\CAD\SHEETFILES\E\E-315_BATT B GALLERY PLAN_III.DWG - SHANK, JASON

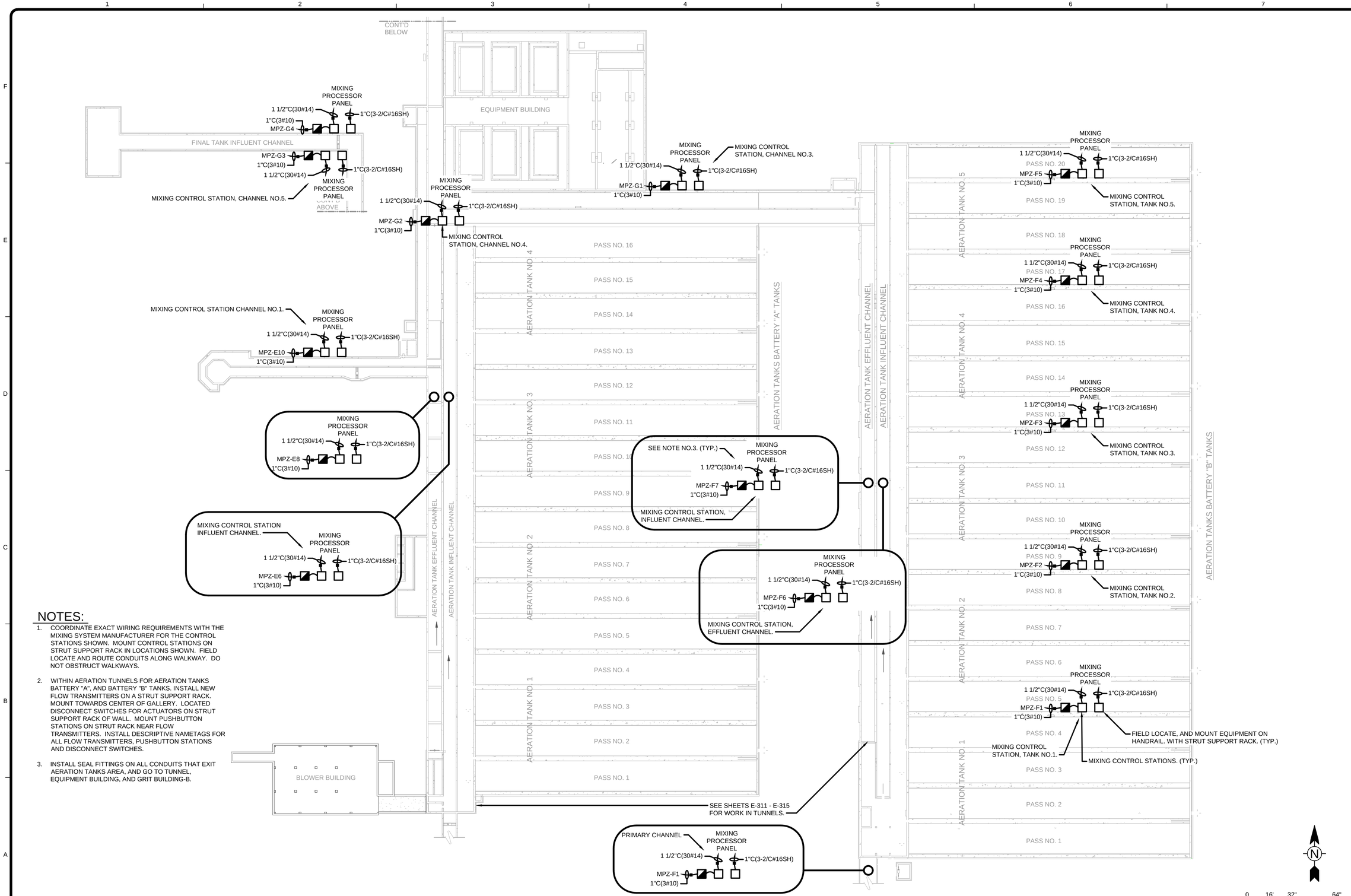

NOTES:

1. COORDINATE EXACT WIRING REQUIREMENTS WITH THE MIXING SYSTEM MANUFACTURER FOR THE CONTROL STATIONS SHOWN. MOUNT CONTROL STATIONS ON STRUT SUPPORT RACK IN LOCATIONS SHOWN. FIELD LOCATE AND ROUTE CONDUITS ALONG WALKWAY. DO NOT OBSTRUCT WALKWAYS.
2. WITHIN AERATION TUNNELS FOR AERATION TANKS BATTERY "A", AND BATTERY "B" TANKS. INSTALL NEW FLOW TRANSMITTERS ON A STRUT SUPPORT RACK. MOUNT TOWARDS CENTER OF GALLERY. LOCATED DISCONNECT SWITCHES FOR ACTUATORS ON STRUT SUPPORT RACK OF WALL. MOUNT PUSHBUTTON STATIONS ON STRUT RACK NEAR FLOW TRANSMITTERS. INSTALL DESCRIPTIVE NAMETAGS FOR ALL FLOW TRANSMITTERS, PUSHBUTTON STATIONS AND DISCONNECT SWITCHES.
3. INSTALL SEAL FITTINGS ON ALL CONDUITS THAT EXIT AERATION TANKS AREA, AND GO TO TUNNEL, EQUIPMENT BUILDING, AND GRIT BUILDING-B.

AERATION TANK OUTDOOR PLAN

SCALE: 1/32"=1'-0"
NEMA 4 AREA

TETRA TECH
www.tetratech.com
401 SOUTH WASHINGTON SQUARE, SUITE 100
LANSING, MI. 48933
PHONE: 517.316.3930, FAX: 517.484.8140

MARK	DATE	DESCRIPTION	BY
	5/29/20	ISSUED FOR BIDS	

CITY OF FLINT, MICHIGAN
FLINT WPC AERATION SYSTEM IMPROVEMENTS
AERATION TANKS
OVERALL ELECTRICAL PLAN
MIXING VALVE CONTROL STATIONS

PROJ:	200-156238-19001
DESN:	GCJ
DRWN:	JLS
CHKD:	WAP

E-316

Copyright: Tetra Tech

Bar Measures 1 inch, otherwise drawing not to scale

5/26/2020 11:09:48 PM - \\TTS073FS1\PROJECTS\ER\156238\200-156238-19001\CAD\SHEETFILES\EE-316_AERATION TANKS.DWG - SHANK, JASON

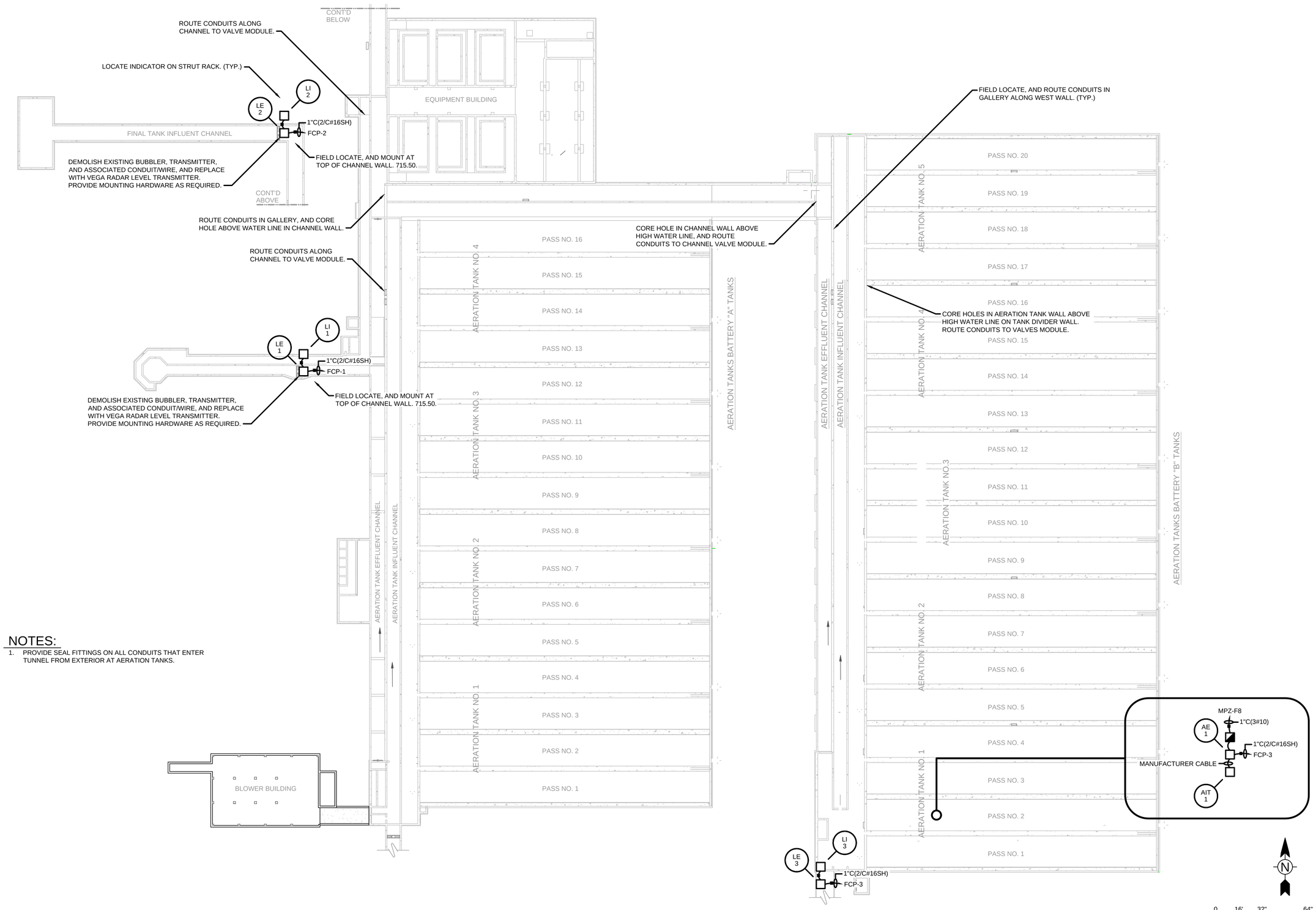

NOTES:

1. PROVIDE SEAL FITTINGS ON ALL CONDUITS THAT ENTER TUNNEL FROM EXTERIOR AT AERATION TANKS.

AERATION TANK PLAN

SCALE: 1/32"=1'-0"
NEMA 4 AREA

TETRA TECH
www.tetratech.com
401 SOUTH WASHINGTON SQUARE, SUITE 100
LANSING, MI, 48933
PHONE: 517.316.3930, FAX: 517.484.8140

MARK	DATE	DESCRIPTION	BY
	5/29/20	ISSUED FOR BIDS	

CITY OF FLINT, MICHIGAN
FLINT WPC AERATION SYSTEM IMPROVEMENTS
AERATION TANKS
OVERALL ELECTRICAL PLAN

PROJ:	200-156238-19001
DESN:	GCJ
DRWN:	JLS
CHKD:	WAP

E-317

Copyright: Tetra Tech

Bar Measures 1 inch, otherwise drawing not to scale

5/26/2020 11:13:34 PM - \\TTS073FS1...ROJECTS\IER\156238\200-156238-19001\CAD\SHEETFILES\E-317_AERATION TANKS_JLD.DWG - SHANK, JASON

NOTES:

1. INSTALL NEW MOTOR CONTROL CENTER SECTIONS ON NEW 4 INCH THICK CONCRETE PAD.
2. PROVIDE SEAL FITTINGS ON ALL CONDUITS THAT ENTER TUNNEL FROM EXTERIOR AT AERATION TANKS.

INSTALL NEW WARNING TAPE FOR BOTH MCC'S. (TYP.)

EXISTING MCC-P4E

MCC-P4E SECTION (EXTEND EXISTING 1200A BUS AS REQUIRED)

FURNISH OFFSET FOR BUS CONNECTIONS TO ACCOMMODATE NEW MCC MOUNTED ON CONCRETE PAD.

FIELD LOCATE CONDUIT ROUTING TO AVOID EXISTING OVERHEAD CRANE.

INSTALL NEW WARNING TAPE FOR BOTH MCC'S. (TYP.)

4" THICK CONCRETE PAD

MCC-P4W EXTENSION

FIELD LOCATE NEW MCC, AND 1200A BUS EXTENSION. EXTEND EXISTING BUS AS REQUIRED.

FURNISH OFFSET FOR BUS CONNECTIONS TO ACCOMMODATE NEW MCC MOUNTED ON CONCRETE PAD.

1200A BUS EXTENSION IN NEMA 4 ENCLOSURE. PROVIDE CORNER TRANSITION SECTION.

EXISTING MCC-P4W

FURNISH ENCLOSURE ON TOP OF EXISTING MCC FOR NEW BUS WORK/EXTENSION. SIZE AS REQUIRED.

EQUIPMENT BUILDING UPPER LEVEL PLAN

SCALE: 1/4"-1'-0"
NEMA 12 AREA - SEE NOTE NO.1

0 2' 4' 8'
SCALE: 1/4" = 1'-0"

N

Bar Measures 1 inch, otherwise drawing not to scale

TETRA TECH
www.tetratech.com
401 SOUTH WASHINGTON SQUARE, SUITE 100
LANSING, MI. 48933
PHONE: 517.316.3930, FAX: 517.484.8140

MARK	DATE	DESCRIPTION	BY
	5/29/20	ISSUED FOR BIDS	

CITY OF FLINT, MICHIGAN
FLINT WPC AERATION SYSTEM IMPROVEMENTS
EQUIPMENT BUILDING UPPER LEVEL PLAN

PROJ:	200-156238-19001
DESN:	GCJ
DRWN:	JLS
CHKD:	WAP

E-318

Copyright: Tetra Tech

5/25/2020 12:41:08 PM - \\TTSO73FS1\ROJECTS\IER\156238\200-156238-19001\CAD\SHEETFILES\E\E-318_EQUIPMENT BLDG UPPER LEVEL PLAN.DWG - SHANK, JASON

NOTES:

1. PROVIDE SEAL FITTINGS ON ALL CONDUITS THAT ENTER TUNNEL FROM EXTERIOR AT AERATION TANKS.

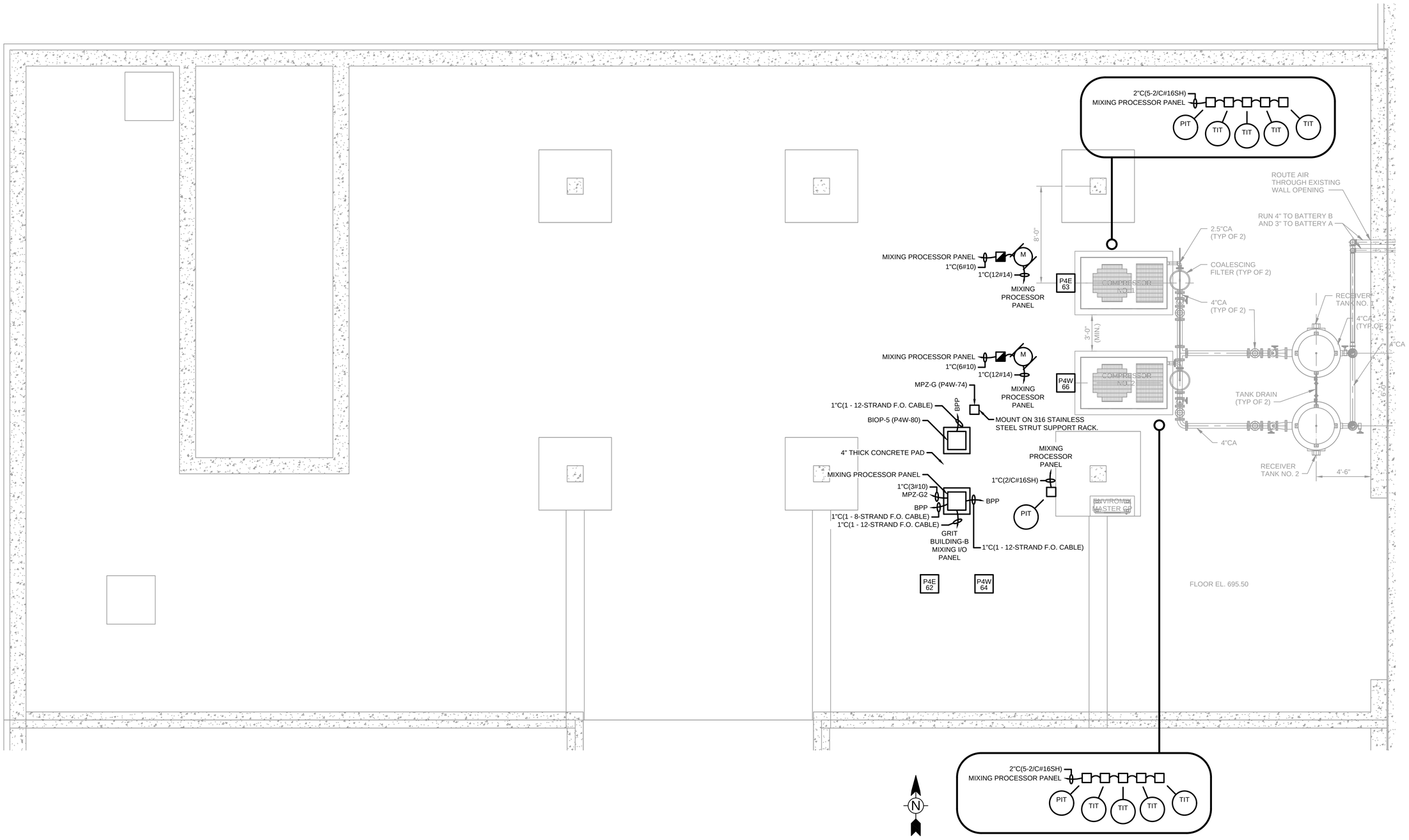

EQUIPMENT BUILDING LOWER LEVEL PLAN

SCALE: 1/4"=1'-0"
NEMA 4 AREA

0 2' 4' 8'
SCALE: 1/4" = 1'-0"

TETRA TECH
www.tetratech.com
401 SOUTH WASHINGTON SQUARE, SUITE 100
LANSING, MI, 48933
PHONE: 517.316.3930, FAX: 517.484.8140

MARK	DATE	DESCRIPTION	BY
	5/29/20	ISSUED FOR BIDS	

CITY OF FLINT, MICHIGAN
FLINT WPC AERATION SYSTEM IMPROVEMENTS
EQUIPMENT BUILDING LOWER LEVEL PLAN

PROJ:	200-156238-19001
DESN:	GCJ
DRWN:	JLS
CHKD:	WAP

E-319

Copyright: Tetra Tech

Bar Measures 1 inch, otherwise drawing not to scale

5/26/2020 11:18:44 PM - \\TTS073FS1\PROJECTS\IER\156238\200-156238-19001\CAD\SHEETFILES\E\E-319_EQUIPMENT BLDG LOWER LEVEL PLAN.DWG - SHANK, JASON

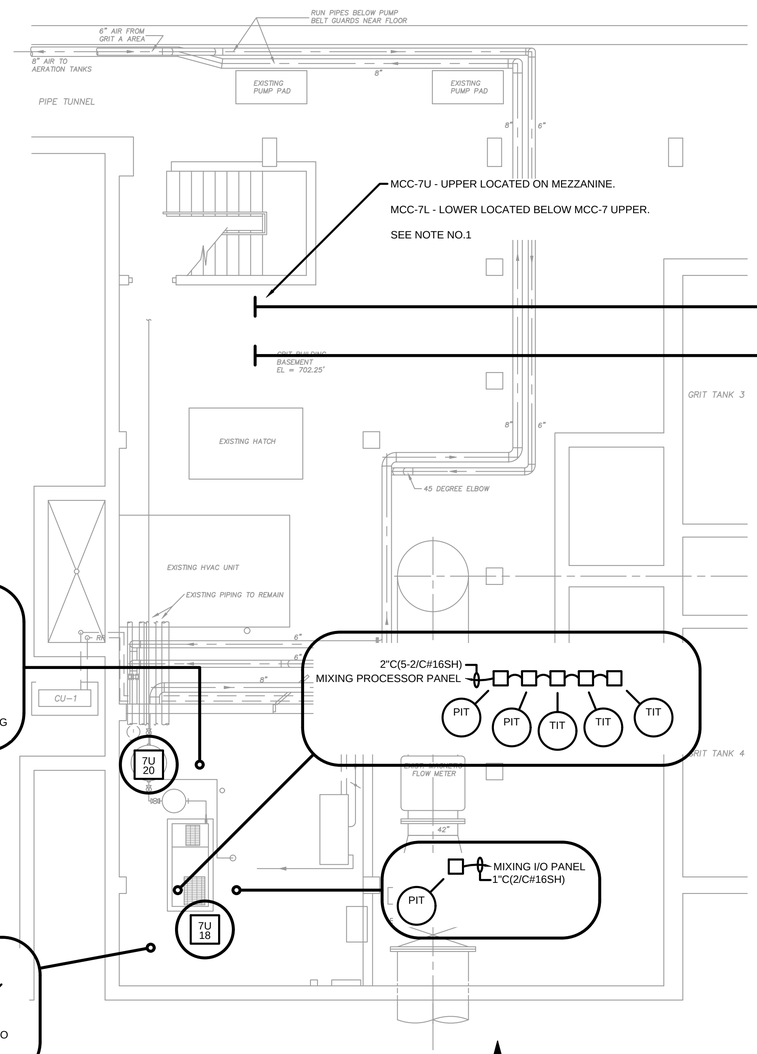

PLAN AT EL. 702.25

SCALE: 3/16" = 1'-0"
NEMA 4 AREA

UPPER LEVEL

LOWER LEVEL

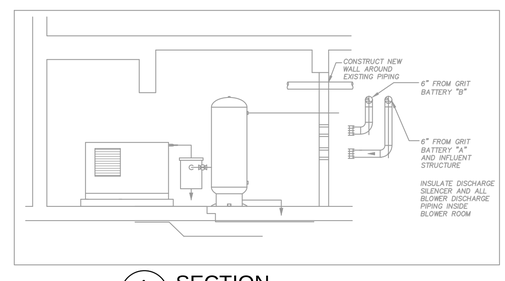

A / D-104 SECTION

SCALE: 3/16" = 1'-0"

NOTES:

1. PROVIDE SEAL FITTINGS ON ALL CONDUITS THAT ENTER TUNNEL FROM EXTERIOR AT AERATION TANKS.

EXISTING DRAWING FROM PREVIOUS PROJECT. PROPOSED WORK SHOWN BOLD, CROSSHATCHED, AND/OR CIRCLED.

GRIT BUILDING-B

NEMA 4 AREA - SEE NOTE NO.1

0 2'-8" 5'-4" 10'-8"

SCALE: 3/16" = 1'-0"

THE BACKGROUND DRAWING WAS ORIGINALLY PREPARED AS PART OF CONTRACT "WATER POLLUTION CONTROL PLANT IMPROVEMENTS AND MODIFICATIONS", CITY OF FLINT, MICHIGAN CONTRACT NO.XXX. SHEETS G-11 AND G-14

TETRA TECH
www.tetratech.com
401 SOUTH WASHINGTON SQUARE, SUITE 100
LANSING, MI, 48933
PHONE: 517.316.3930, FAX: 517.484.8140

MARK	DATE	DESCRIPTION	BY
	5/29/20	ISSUED FOR BIDS	

CITY OF FLINT, MICHIGAN

FLINT WPC AERATION SYSTEM IMPROVEMENTS

GRIT BUILDING-B LOWER LEVEL PLAN AND SECTION

PROJ:	200-156238-19001
DESN:	GCJ
DRWN:	JLS
CHKD:	WAP

E-320

Copyright: Tetra Tech

Bar Measures 1 inch, otherwise drawing not to scale

5/26/2020 11:24:59 PM - \\TTS073FS1.\PROJECTS\IER\156238\200-156238-19001\CAD\SHEETFILES\E\E-320_GRIT BLDG.DWG - SHANK, JASON

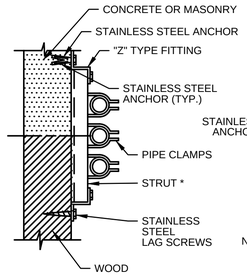

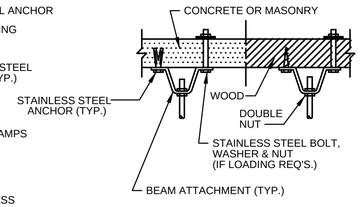

NOTE: * = STRUT SHALL BE STAINLESS STEEL HAVE A MIN. THICKNESS OF .105 INCH OR 12 GA.

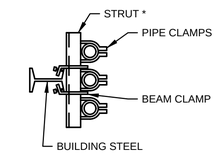

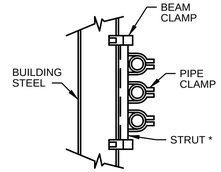

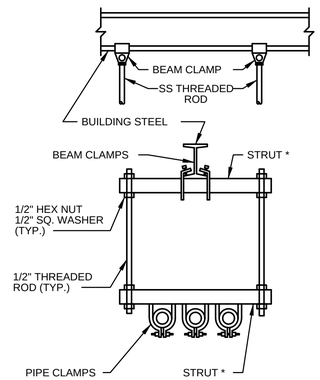

VERTICALLY RACKED SUSPENDED RUN

NO SCALE

NOTES:

1. MOUNTING HARDWARE AND SUPPORTS TO BE 316 STAINLESS STEEL.

HORIZ. RACKED SUSPENDED RUN

NO SCALE

NOTES:

1. MOUNTING HARDWARE AND SUPPORTS TO BE 316 STAINLESS STEEL.

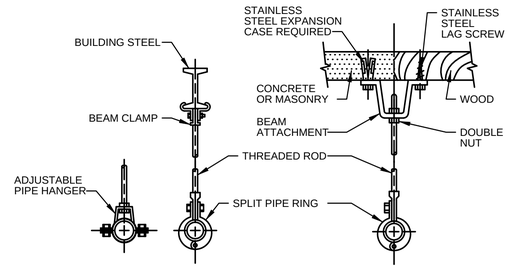

SINGLE CONDUIT HANGERS

NO SCALE

NOTES:

1. ALL MOUNTING HARDWARE AND SUPPORTS TO BE 316 STAINLESS STEEL.

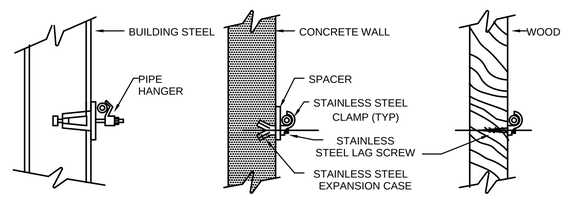

VERTICAL AND HORIZONTAL CONDUIT RACKS AND HANGERS

NO SCALE

NOTES:

1. MOUNTING HARDWARE AND SUPPORTS TO BE 316 STAINLESS STEEL.

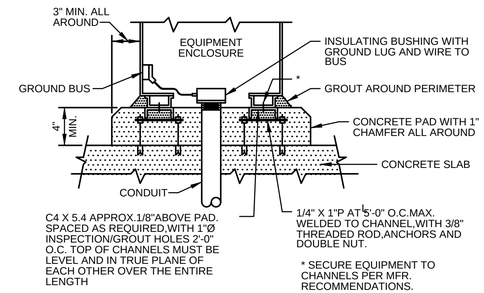

PAD MOUNTED EQUIPMENT DETAIL

NO SCALE

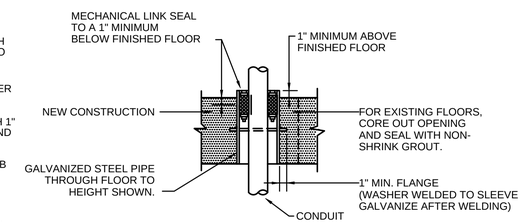

INTERIOR FLOOR CONDUIT SLEEVE DETAIL

NO SCALE

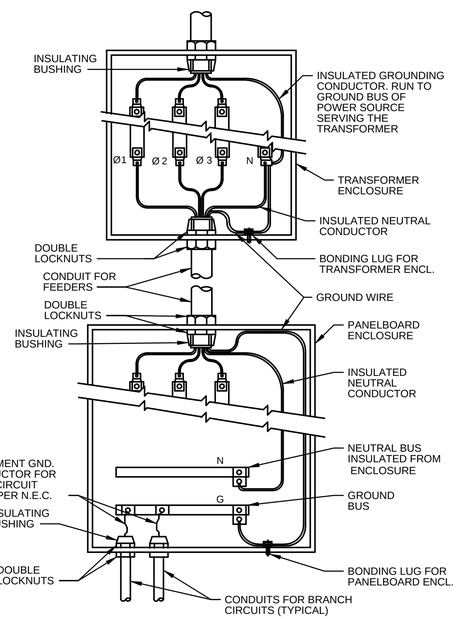

CONDUIT GROUNDING DETAILS FOR TRANSFORMERS, DISTRIBUTION PANELS AND WALL MOUNTED ENCLOSURES

NO SCALE

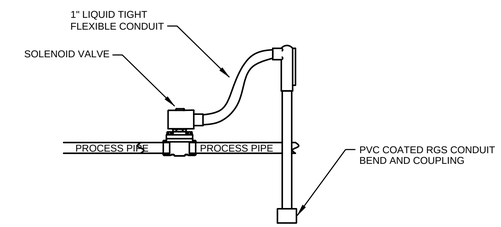

SOLENOID STUB-UP DETAIL

NO SCALE

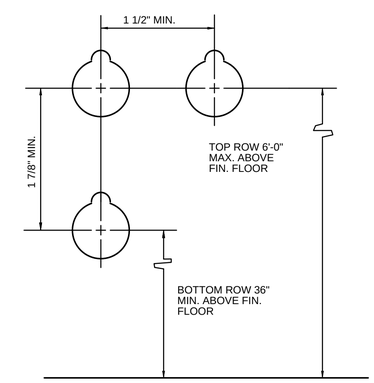

TYPICAL PUSHBUTTON, PILOTLIGHT SELECTOR SWITCH PANEL SPACING

NO SCALE

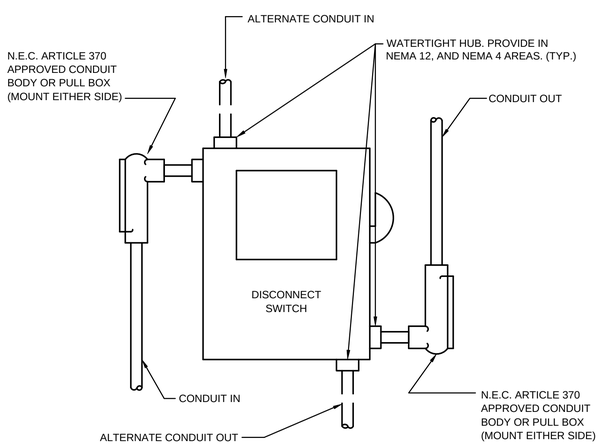

DISCONNECT SWITCHES

NO SCALE

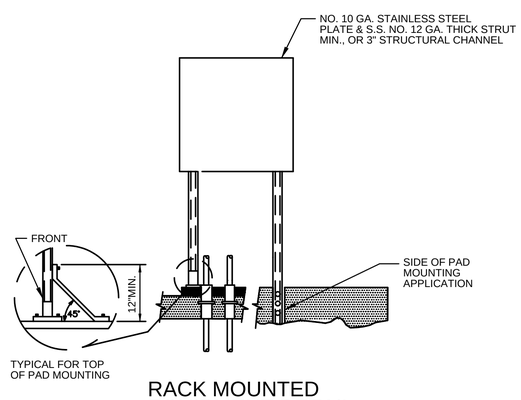

RACK MOUNTED EQUIPMENT DETAIL

NO SCALE

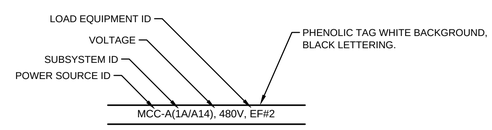

FEEDER & BRANCH CIRCUIT RACEWAY LABELS

NOTE:

1. IN ACCESSIBLE CEILING SPACES AND EXPOSED IN UNFINISHED AREAS, LABEL CONDUIT WITH PANEL AND CIRCUIT NUMBERS OF CONDUCTORS ROUTED THROUGH THE CONDUIT. LABEL CONDUIT AT WALL PENETRATIONS AND CONNECTIONS TO ALL PANELS, JUNCTION BOXES, AND EQUIPMENT SERVED.

ALL HARDWARE SHALL BE 316 STAINLESS STEEL INCLUDING NUTS, BOLTS, WASHERS, ANCHORS, STRUTS, ETC. THIS REQUIREMENT HAS PRECEDENCE OVER STANDARD DETAILS, AND PROJECT MANUAL/SPECIFICATIONS.

TETRA TECH
www.tetratech.com
401 SOUTH WASHINGTON SQUARE, SUITE 100
LANSING, MI. 48933
PHONE: 517.316.3930, FAX: 517.484.8140

MARK	DATE	DESCRIPTION	BY
	5/29/20	ISSUED FOR BIDS	

CITY OF FLINT, MICHIGAN
FLINT WPC AERATION SYSTEM IMPROVEMENTS
ELECTRICAL DETAILS

PROJ:	200-156238-19001
DESN:	GCJ
DRWN:	JLS
CHKD:	WAP

E-400

Copyright: Tetra Tech

Bar Measures 1 inch, otherwise drawing not to scale

5/25/2020 10:51:48 AM - \\TTS073FS1\PROJECTS\IER\156238\200-156238-19001\CAD\SHEETFILES\E\E-400_E-DET.DWG - SHANK, JASON

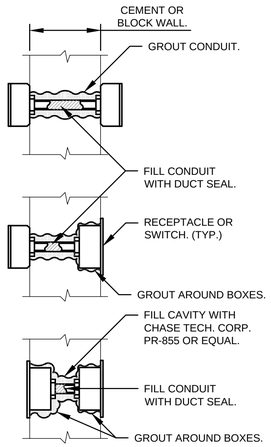

WALL BOXES BACK-TO-BACK

NO SCALE

- FOR SOUND PROOFING

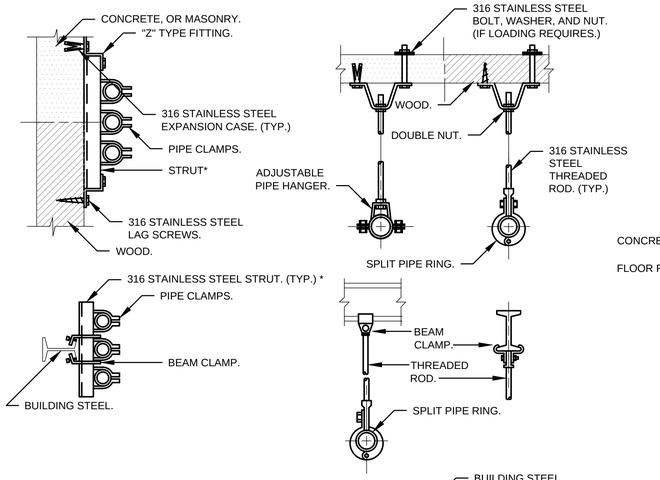

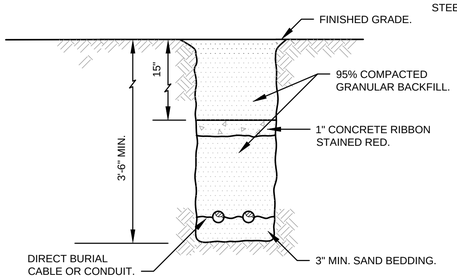

TRENCHING DETAIL

NO SCALE

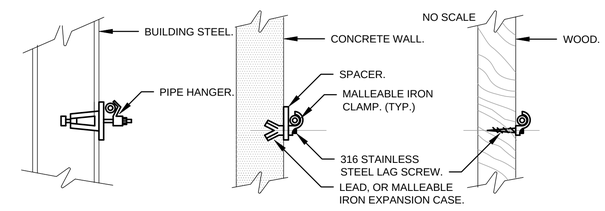

NO SCALE

VERTICAL AND HORIZONTAL CONDUIT RACKS AND HANGERS

NO SCALE

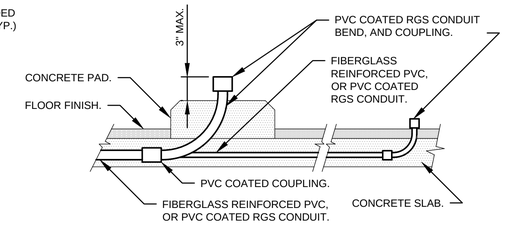

NOTE:
PVC COATED CONDUIT BENDS, AND FITTINGS SHALL BE USED WHERE CONCEALED CONDUIT RUNS ARE STUBBED UP FROM THE SLAB. RISERS ON POLES SHALL BE PVC COATED RGS INCLUDING WEATHERHEADS.

CONDUIT STUB-UP DETAIL

NO SCALE

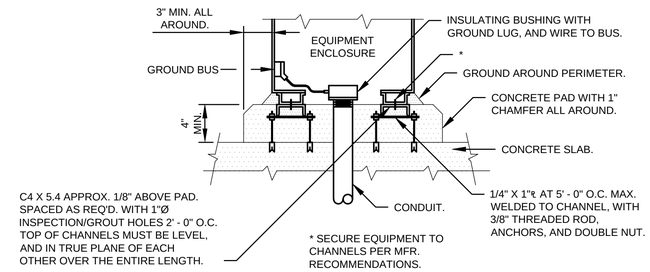

OUTDOOR PAD MOUNTED EQUIPMENT DETAIL

NO SCALE

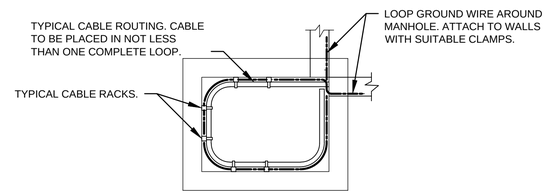

CABLE ROUTING DETAIL

NO SCALE

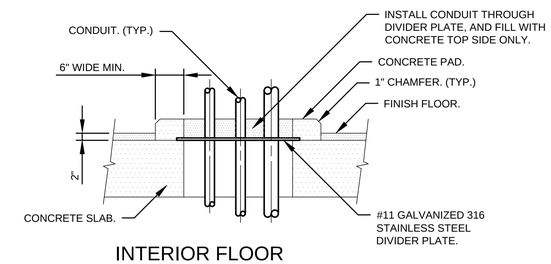

INTERIOR FLOOR CONDUIT FLOOR OPENING DETAIL

NO SCALE

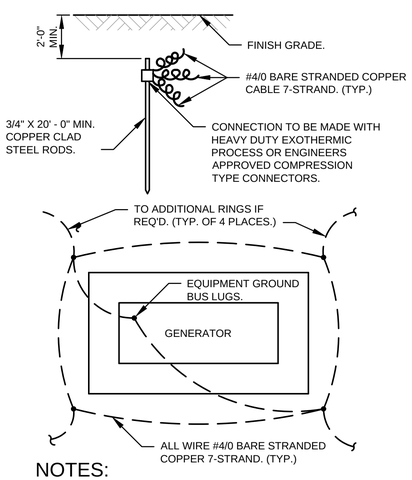

NOTES:
ADDITIONAL CONCENTRIC RINGS SHALL BE ADDED AS REQ'D. TO MEET THE (5) OHM SPECIFIED RESISTANCE. EACH RING TO HAVE 4 GROUND RODS, AND SPACE 10 FEET FROM THE INNER RING.

GROUND MAT DETAIL

NO SCALE

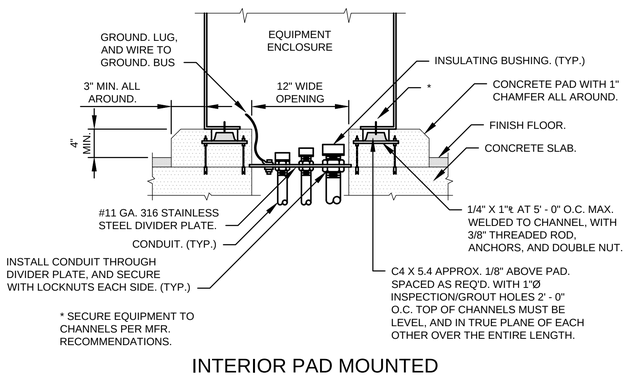

INTERIOR PAD MOUNTED EQUIPMENT DETAIL

NO SCALE

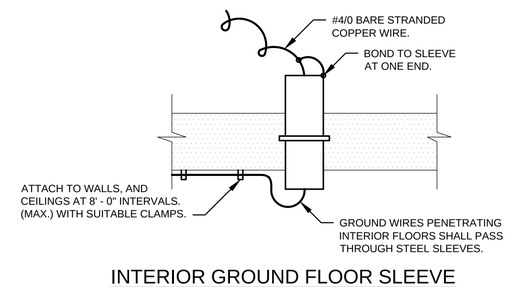

INTERIOR GROUND FLOOR SLEEVE

NO SCALE

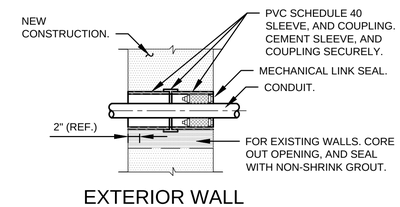

EXTERIOR WALL CONDUIT SLEEVE DETAIL

NO SCALE
DO NOT USE BELOW GRADE.

ALL HARDWARE SHALL BE 316 STAINLESS STEEL INCLUDING NUTS, BOLTS, WASHERS, ANCHORS, STRUTS, ETC. THIS REQUIREMENT HAS PRECEDENCE OVER STANDARD DETAILS, AND PROJECT MANUAL/SPECIFICATIONS.

TETRA TECH
www.tetratech.com
401 SOUTH WASHINGTON SQUARE, SUITE 100
LANSING, MI. 48933
PHONE: 517.316.3930, FAX: 517.484.8140

MARK	DATE	DESCRIPTION	BY
	5/29/20	ISSUED FOR BIDS	

CITY OF FLINT, MICHIGAN
FLINT WPC AERATION SYSTEM IMPROVEMENTS
ELECTRICAL DETAILS

PROJ:	200-156238-19001
DESN:	GCJ
DRWN:	JLS
CHKD:	WAP

E-401

Copyright: Tetra Tech

Bar Measures 1 inch, otherwise drawing not to scale

5/21/2020 2:15:26 PM - \\TTSO73FS1□ROJECTS\IER\156238\200-156238-19001\CAD\SHEETFILES\E\E-401_E-DET_II.DWG - SHANK, JASON

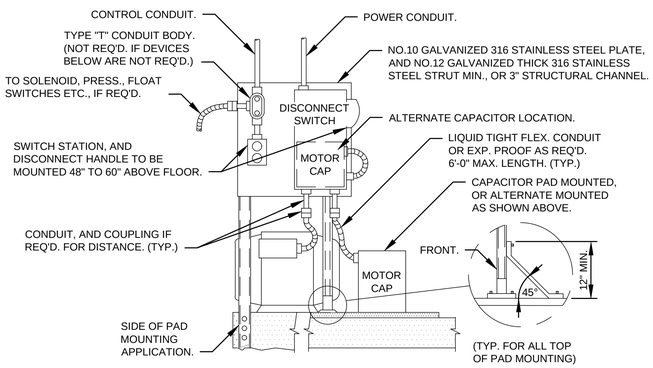

MOTOR CONDUIT DETAIL

NO SCALE
CONDUIT FROM ABOVE POWER AND CONTROL IN SEPARATE CONDUIT.

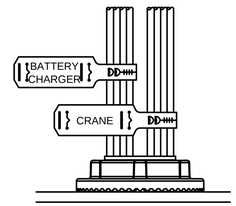

WIRE/CABLE BUNDLE TAG

NOTE:
1. BLACK LETTERING ON WHITE BACKGROUND (POWER)
2. BLACK LETTERING ON YELLOW BACKGROUND (SIGNAL)
3. BUNDLE AND LABEL WIRES/CABLES GOING TO A COMMON PANEL/EQUIPMENT/DEVICE
4. LABEL IN PANELS, MCC, MANHOLES, HAND HOLES, AND BOXES OVER 8 CUBIC FEET.

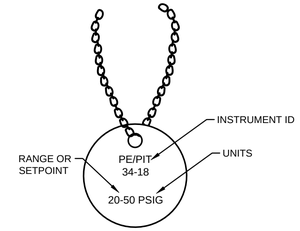

INSTRUMENT TAG

NOTE:
1. STAINLESS STEEL TAG
2. STAINLESS STEEL CHAIN
3. BLACK LETTERING
4. INSTALL TAG ON ELEMENTS AND INSTRUMENTS.

WHITE BACKGROUND BLACK LETTERS

CONTROL PANEL
*
SUPPLY XXX VOLTS: **
Disconnect Current Rating: _____
XXXXXXXXXXXXXXXX
Drawing No. _____ ***
Built By: ****
Equipment Modle No. ****
Equipment Serial No. ****
Contract ****
Date of Manfacture Machine ****

PANEL TAG

NOTE:
1. * = PANEL NAME
2. ** = MCC & BUCKET OR LIGHTING PANEL & CIRCUIT NUMBER
3. *** = DRAWING NUMBER
4. **** = MANUFACTURER, MODEL #, SERIAL #, CONTACT INFO. & DATE.

YELLOW BACKGROUND BLACK LETTERS

DANGER

YELLOW WIRING IS NOT DE-ENERGIAED BY DISCONNECT

AUTHORIZED PERSONNEL ONLY ALLOWED TO ENTER

YELLOW WIRING PANEL TAG

NOTE:
1. TO BE USED WHEN PANEL HAS FOREIGN POWER (CIRCUITS THAT DO NOT DE-ENERGIZE WHEN DISCONNECT OF MAIN CIRCUIT BREAKER IS TURNED OFF). EXAMPLE IS WHEN THE MCC POWERS THE START CONTACT TO A PLC PANEL.

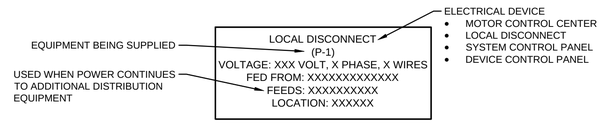

EQUIPMENT NAMEPLATE

NOTE:
1. BLACK LETTERING ON WHITE BACKGROUND

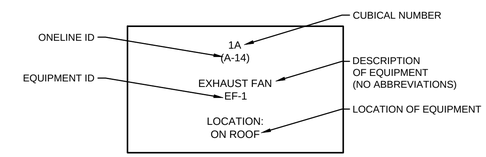

MOTOR CONTROL CENTER CUBICAL NAMEPLATE

NOTE:
1. BLACK LETTERING ON WHITE BACKGROUND

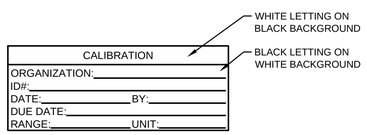

INSTRUMENT CALIBRATION

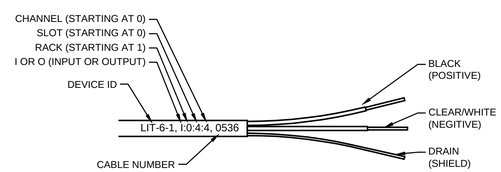

TWO CONDUCTOR CABLE

NOTE:
1. BLACK LETTERING ON WHITE BACKGROUND

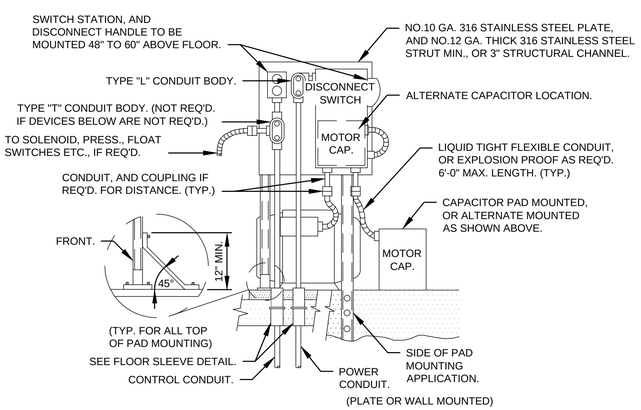

MOTOR CONDUIT DETAIL

NO SCALE
CONDUIT FROM BELOW POWER AND CONTROL IN SEPARATE CONDUIT.

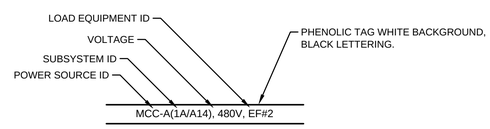

FEEDER & BRANCH CIRCUIT RACEWAY LABELS

NOTE:
1. IN ACCESSIBLE CEILING SPACES AND EXPOSED IN UNFINISHED AREAS, LABEL CONDUIT WITH PANEL AND CIRCUIT NUMBERS OF CONDUCTORS ROUTED THROUGH THE CONDUIT. LABEL CONDUIT AT WALL PENETRATIONS AND CONNECTIONS TO ALL PANELS, JUNCTION BOXES, AND EQUIPMENT SERVED.

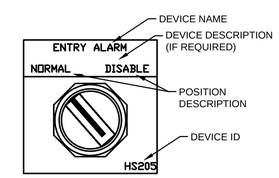

PANEL TAG PUSH BUTTON/SWITCH

NOTE:
1. BLACK LETTERING ON WHITE BACKGROUND

ALL HARDWARE SHALL BE 316 STAINLESS STEEL INCLUDING NUTS, BOLTS, WASHERS, ANCHORS, STRUTS, ETC. THIS REQUIREMENT HAS PRECEDENCE OVER STANDARD DETAILS, AND PROJECT MANUAL/SPECIFICATIONS.

TETRA TECH
www.tetratech.com
401 SOUTH WASHINGTON SQUARE, SUITE 100
LANSING, MI, 48933
PHONE: 517.316.3930, FAX: 517.484.8140

MARK	DATE	DESCRIPTION	BY
	5/29/20	ISSUED FOR BIDS	

CITY OF FLINT, MICHIGAN
FLINT WPC AERATION SYSTEM IMPROVEMENTS
ELECTRICAL DETAILS

PROJ:	200-156238-19001
DESN:	GCJ
DRWN:	JLS
CHKD:	WAP

E-402

Copyright: Tetra Tech

Bar Measures 1 inch, otherwise drawing not to scale

5/21/2020 2:16:58 PM - \\TTS073FS1\PROJECTS\ER\156238\200-156238-19001\CAD\SHEETFILES\E\E-402_E-DET_III.DWG - SHANK, JASON

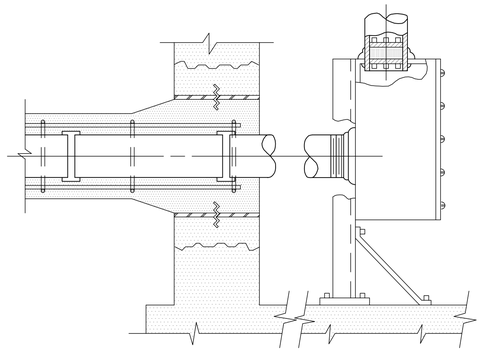

EXISTING OR NEW CONSTRUCTION

BELOW GRADE DUCT ENTRANCE DETAIL

NO SCALE
FOR WIRE SIZE NO.4 OR LARGER ONLY

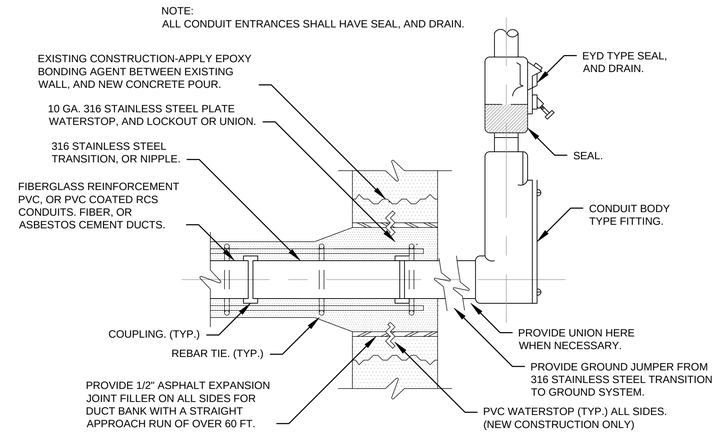

EXISTING OR NEW CONSTRUCTION

BELOW GRADE DUCT ENTRANCE DETAIL

NO SCALE
FOR WIRE SIZE SMALLER THAN NO.4 ONLY

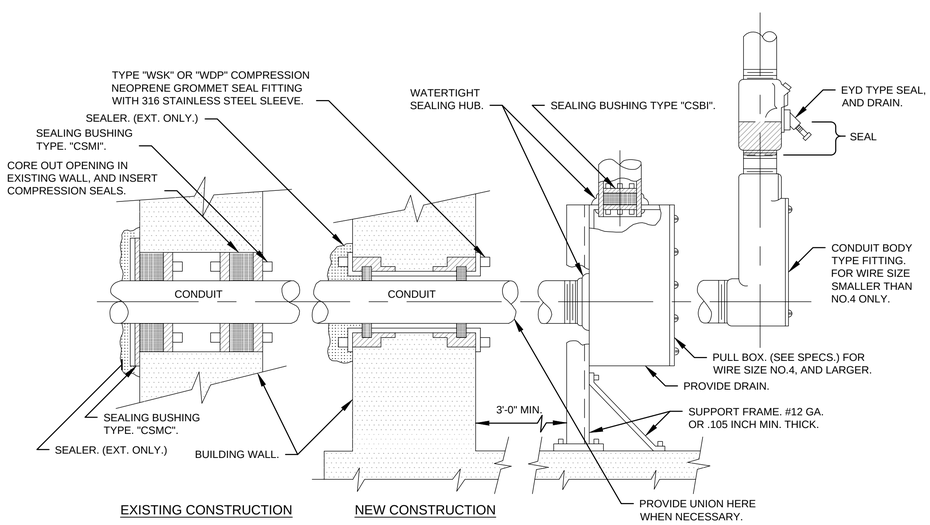

EXISTING CONSTRUCTION NEW CONSTRUCTION

BELOW GRADE CONDUIT ENTRANCE DETAIL

NO SCALE
NOTE: ALL CONDUIT ENTRANCES SHALL HAVE SEAL, AND DRAIN.

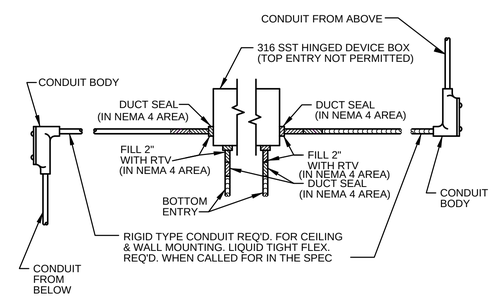

NOTES:

1. TAG ALL CABLES PASSING THROUGH BOX.
2. USE WATER-TIGHT HUBS.

ALL HARDWARE SHALL BE 316 STAINLESS STEEL INCLUDING NUTS, BOLTS, WASHERS, ANCHORS, STRUTS, ETC. THIS REQUIREMENT HAS PRECEDENCE OVER STANDARD DETAILS, AND PROJECT MANUAL/SPECIFICATIONS.

TETRA TECH
www.tetratech.com
401 SOUTH WASHINGTON SQUARE, SUITE 100
LANSING, MI. 48933
PHONE: 517.316.3930, FAX: 517.484.8140

MARK	DATE	DESCRIPTION	BY
	5/29/20	ISSUED FOR BIDS	

CITY OF FLINT, MICHIGAN
FLINT WPC AERATION SYSTEM IMPROVEMENTS
ELECTRICAL DETAILS

PROJ:	200-156238-19001
DESN:	GCJ
DRWN:	JLS
CHKD:	WAP

E-403

Copyright: Tetra Tech

Bar Measures 1 inch, otherwise drawing not to scale

5/21/2020 2:18:50 PM - \\TTS073FS1\PROJECTS\IER\156238\200-156238-19001\CAD\SHEETFILES\E\E-403_E-DET_IIIV.DWG - SHANK, JASON

GRAPHIC SYMBOLS FOR INSTRUMENTATION ITEMS

	DESCRIPTION	SYMBOL	DESCRIPTION
	DEVICE MOUNTED ON PANEL		FLOW ACTUATED SWITCH - NC
	BOARD OR PANEL MOUNTED DEVICE - DEVICE MOUNTED INSIDE PANEL		TEMPERATURE SWITCH - NO
	FIELD OR LOCALLY MOUNTED DEVICE		TEMPERATURE SWITCH - NC
	PROGRAMMED FUNCTION NOT NORMALLY ACCESSIBLE TO OPERATOR		LIMIT SWITCH (PROXIMITY TYPE) - NORMALLY OPEN
	PROGRAMMED FUNCTION ACCESSIBLE THROUGH OPERATOR'S INTERFACE DEVICE		LIMIT SWITCH (PROXIMITY TYPE) - NORMALLY CLOSED
	PLC INPUT OR OUTPUT POINT		LIMIT SWITCH (PROXIMITY TYPE) - NORMALLY CLOSED - HELD OPEN
	INTERLOCKING		LIMIT SWITCH (PROXIMITY TYPE) - NORMALLY OPEN - HELD CLOSED
XOR	EXCLUSIVE OR		CONTROL RELAY CONTACT - NORMALLY OPEN
A	ALTERNATOR		CONTROL RELAY CONTACT - NORMALLY CLOSED
OR	OR		LIGHTING ARRESTOR
AND	AND	ETI	ELAPSED TIME INDICATOR
S	MOTOR STARTER	T	TIMING RELAY COIL
P	PURGE	T 1	TIMING RELAY COIL (OFF DELAY)
L	COMPLEX LOGIC	G	INDICATING LIGHT
	COMPUTER LOGIC SYSTEM		PUSH-TO-TEST INDICATING LIGHT
	TERMINAL OR TRANSITION POINT		BATTERY
	FLOAT SWITCH	X1 X2	SECONDARY TRANSFORMER
	PARTIAL FLUME		VARIABLE RESISTOR
	MIXER		RESISTOR
	SEAL		MOLDED CASE CIRCUIT BREAKER
	OFF PAGE CONNECTOR		SPEED SWITCH
	PROCESS MACHINERY MOTOR		MOMENTARY PUSHBUTTON OPERATOR - NORMALLY CLOSED
	VENTURI OR INSERT FLOW TUBE		MOMENTARY PUSHBUTTON OPERATOR - NORMALLY OPEN
	IN-FLOW ELEMENT (PROPELLER TYPE)		SELECTOR SWITCH - NORMALLY OPEN
	IN-LINE FLOW ELEMENT (MAGNETIC TYPE)		PUSHBUTTON OPERATOR WITH MUSHROOM HEAD
	IN-LINE FLOW ELEMENT (ULTRASONIC)		SOLENOID OR CLUTCH
	THERMOMASS FLOW METER		THERMAL OVERLOAD
	FLOW ORIFICE	(F)	FIELD LOCATED
	TURBIDITY METER		TERMINAL POINT
	ROTOMETER		TERMINAL
	PUMP		LOW VOLTAGE FUSE
	BLOWER		FUSIBLE TERMINAL BLOCK
	GENERAL USE DISCONNECTING SWITCH		CIRCUIT BREAKER WITH STAB CONNECTION
	TIME CLOSED CONTACT ON ENERGIZATION		CONTROL POWER TRANSFORMER
	TIME OPENED CONTACT ON ENERGIZATION	CR L / CR U	TWO COIL LATCHING RELAY
	TIME CLOSED CONTACT ON DE-ENERGIZATION		RECEPTACLE
	TIME OPENED CONTACT ON DE-ENERGIZATION	OFF HAND AUTO	SELECTOR SWITCH OPERATOR WITH FUNCTION SHOWN
	FLOAT ACTUATED SWITCH - NO		
	FLOAT ACTUATED SWITCH - NC		
	PRESSURE ACTUATED SWITCH - NO		
	PRESSURE ACTUATED SWITCH - NC		
	FLOW ACTUATED SWITCH - NO		

GRAPHIC SYMBOLS FOR INSTRUMENTATION ITEMS

SYMBOL	DESCRIPTION	SYMBOL	DESCRIPTION
FOC-DI(X) FOC-DO(X)	DISCRETE INPUT TO FIBER CONVERTER (PROVIDE WITH 120V AC P/S FIBER CONVERTER TO DISCRETE OUTPUT) (PROVIDE WITH 120V AC P/S (WEED EOTEC - 2S07/2H07 WITH 120V AC P/S)) QUANTITY (X) AS NOTED ON DRAWINGS	FOC-AI(X) FOC-AO(X)	ANALOG INPUT TO FIBER CONVERTER. FIBER CONVERTER TO ANALOG INPUT (WEED EOTEC 2T14/2R14 WITH P/S AS REQUIRED) QUANTITY (X) AS NOTED ON DRAWINGS
FOC	FIBER OPTIC CONVERTER - TYPE, AND STYLE AS NOTED		FLANGED DIAPHRAGM SEAL
FOPP	FIBER OPTIC PATCH PANEL - CONNECTORS, AND QUANTITY AS REQUIRED		

GRAPHIC SYMBOLS FOR VALVES

SYMBOL	DESCRIPTION	SYMBOL	DESCRIPTION
	STROKE OR POSITION ACTUATOR CYLINDER (OPEN-SHUT)		CHECK VALVE
	STROKE OR POSITION ACTUATOR CYLINDER (THROTTLING)		PLUG VALVE
	PNEUMATIC DIAPHRAGM OR POSITIONER (OPEN-SHUT)		BUTTERFLY VALVE, DAMPER OR LOUVER
	PNEUMATIC DIAPHRAGM OR POSITIONER (THROTTLING)	S	TWO - WAY SOLENOID VALVE OPERATOR
M	MOTOR OPERATED (THROTTLING)	M	ELECTRONICALLY CONTROLLED CHECK VALVE
M	MOTOR OPERATED (OPEN - SHUT)	S D	TWO - WAY SOLENOID VALVE OPERATOR - DETENTED
	SLIDE - STOP GATE	S	THREE - WAY SOLENOID VALVE OPERATOR
	SLUICE GATE	S	FOUR - WAY SOLENOID VALVE OPERATOR
	AIR SET ASSEMBLY	S S MD	MANIFOLD STYLE BLOCK I/O SOLENOID VALVE - DUAL COILS
	BALL VALVE		
	GLOBE VALVE		
	GATE VALVE OR KNIFE GATE		

NOTE: THE PLC I/O ADDRESS SHALL BE USED AS THE WIRING TAG SCHEME FOR ALL PANEL AND FIELD CONTROL WIRING. COORDINATE WITH ELECTRICAL CONTRACTOR.

INSTRUMENTATION LINE SYMBOLS

SYMBOL	DESCRIPTION	SYMBOL	DESCRIPTION
	ELECTRICAL SIGNAL	E-NET	ETHERNET COMMUNICATION SIGNAL-UNSHIELDED TWISTED PAIR (UTP)-SPEED AS INDICATED
	AIR LINE/PNEUMATIC SIGNAL	E-FO	ETHERNET FIBER OPTIC COMMUNICATIONS SIGNAL
L	HYDRAULIC SIGNAL	FO	PLC REMOTE I/O FIBER OPTIC COMMUNICATION SIGNAL
	ELECTROMAGNETIC OR SONIC SIGNAL	V-FO	ETHERNET VIDEO FIBER OPTIC
O	SOFTWARE SIGNAL		
	CONNECTION TO PROCESS, OR MECHANICAL LINK		

I.S.A. STANDARD LETTER FUNCTIONS

SYMBOL	FIRST LETTER	SUCCEEDING LETTERS
A	ANALYSIS, ANALOG	ALARM
B	BURNER, FLAME	BATCH
C	CONDUCTIVITY, COMMAND	CONTROL (FEEDBACK TYPE)
D	DENSITY, SPECIFIC GRAVITY	
E	VOLTAGE	PRIMARY ELEMENT
F	FLOW RATE	RATIO
G	GAGING	GLASS
H	HAND, MANUAL	HIGH
I	CURRENT	INDICATE
J	POWER	SCAN
K	TIME, TIME SCHEDULE	CONTROL (NO FEEDBACK)
L	LEVEL, LIGHT	LOW
M	MOISTURE, HUMIDITY	MIDDLE, MODULATE
N		
O	OVERLOAD	ORIFICE
P	PRESSURE, VACUUM	POINT
Q	QUANTITY	TOTALIZE, INTEGRATE
R	RADIOACTIVITY	RECORD, PRINT, RECEIVE
S	SPEED, FREQUENCY, SOLENOID	SWITCH
T	TEMPERATURE, TURBIDITY	TRANSMIT, TRANSFORM
U	MULTIVARIABLE	MULTIFUNCTION
V	VIBRATION, VISCOSITY	VALVE, DAMPER, LOUVER
W	WEIGHT, FORCE	
X		
Y		RELAY, COMPUTE
Z	POSITION	DRIVE, ACTUATE

ABBREVIATIONS

SYMBOL	DESCRIPTION
R	RESET
T	TRIP
AS	AIR SUPPLY
DO	DISSOLVED OXYGEN
GS	GAS SUPPLY
HS	HYDRAULIC SUPPLY
NS	NITROGEN SUPPLY
ORP	OXYGEN REDUCTION POTENTIAL
SS	STEAM SUPPLY
SP	SET POINT
WS	WATER SUPPLY
PV	PROCESS VARIABLE
F.O.	FAIL OPEN
F.C.	FAIL CLOSE
SBPP	SCREEN BUILDING PROCESSOR PANEL
TFBMPP	TERTIARY FILTER BUILDING MAIN PROCESSOR PANEL
HVACP	HEATING VENTILATION AIR CONDITIONING CONTROL PANEL - I/O
MD	MAIN DISCONNECT
%	GAIN OR PROPORTIONAL CONTROL
∫	INTEGRAL OR RESET CONTROL
D	DERIVATIVE OR RATE CONTROL
V	VELOCITY ALGORITHM
1-0	ON - OFF CONTROL
√	SQUARE ROOT EXTRACTOR
Σ	ADD OR TOTALIZE
Δ	SUBTRACT OR DIFFERENCE
>	HIGHEST MEASURED VARIABLE
<	LOWEST MEASURED VARIABLE
E/I , I/P	CONVERT ONE TO ANOTHER
* , /	MULTIPLY, DIVIDE
±	BIAS OR REVERSING
f(x)	CHARACTERIZE - (EQUATION / /D/%/ETC.)

TETRA TECH
www.tetratech.com
401 SOUTH WASHINGTON SQUARE, SUITE 100
LANSING, MI, 48933
PHONE: 517.316.3930, FAX: 517.484.8140

MARK	DATE	DESCRIPTION	BY
	5/29/20	ISSUED FOR BIDS	

CITY OF FLINT, MICHIGAN
FLINT WPC AERATION SYSTEM IMPROVEMENTS
INSTRUMENTATION LEGEND

PROJ:	200-156238-19001
DESN:	GCJ
DRWN:	JLS
CHKD:	MSJ/WAP

I-001

Copyright: Tetra Tech

Bar Measures 1 inch, otherwise drawing not to scale

5/25/2020 1:20:02 PM - \\TTS073FS1...ROJECTS\IER\156238\200-156238-19001\CAD\SHEETFILES\EI\I-001_I-LEG.DWG - SHANK, JASON

NOTES:

1. FIELD VERIFY CONDUIT ROUTING AT THE PLANT WITH OWNER. CORE HOLES AS REQUIRED TO SUIT INSTALLATION OF THE CONDUITS SHOWN. PATCH WITH NON-SHRINK GROUT.
2. TURN OVER TO OWNER AT PROJECT COMPLETION OPERATION AND MAINTENANCE MANUALS (QUANTITY AS SPECIFIED) TO OWNER.
3. IN ADDITION TO PATCH CABLES SUPPLIED FOR THE PROJECT, FURNISH 30-10FT LONG MULTIMODE DUPLEX FIBER OPTIC PATCH CABLES (ST-ST) CONNECTORS, AND 30-10FT CAT-5E PATCH CABLES FOR OWNERS USE. TURN OVER CABLES TO OWNER.
4. MULTIMODE FIBER OPTIC PATCH CABLES, AND ETHERNET PATCH CABLES SUPPLIED IN THE PROJECT SHALL BE COLORED PURPLE.
5. FIBER OPTIC PATCH PANELS SHALL BE THE PRODUCT OF CORNING CABLE SYSTEMS. (RACK OR SURFACE MOUNTED AS SHOWN", ST STYLE CONNECTORS, WITH QUANTITY OF BULKHEADS AS SHOWN.

GENERAL CONSTRUCTION NOTES:

1. ELECTRICAL MATERIALS AND EQUIPMENT ITEMS SHOWN IN LIGHT LINE WEIGHTS ON THE DRAWINGS ARE EXISTING ITEMS TO REMAIN. ELECTRICAL MATERIALS AND EQUIPMENT ITEMS SHOWN IN HEAVY LINE WEIGHTS ARE NEW THIS CONTRACT.
2. ITEMS SHOWN OR NOTED TO BE DEMOLISHED ON THE DRAWINGS ARE EXISTING ITEMS TO BE REMOVED FROM SITE BY CONTRACTOR UNLESS NOTED TO BE TURNED OVER TO OWNER.
3. FOR ITEMS INDICATED AS "FIELD LOCATE", THE CONTRACTOR SHALL FIELD VERIFY FOR INTERFERENCE AND FOR LOCATIONS OF MOUNTING FLANGES, CONNECTION POINTS, ETC.
4. CONDUIT ROUTINGS SHOWN ON BACKGROUND PLANS ARE INTENDED ROUTINGS ONLY. EXACT CONDUIT ROUTINGS FOR CONDUITS, AND LENGTH SHALL BE FIELD LOCATED AND VERIFIED BY THE CONTRACTOR. COORDINATE CONDUIT ROUTING IN FINISHED AREAS WITH OWNER. CONDUIT TO BE CONCEALED IN THESE AREAS.
5. REFER TO THE CABLE MANUFACTURER'S RECOMMENDATIONS FOR MINIMUM BEND RADIUS FOR FIBER OPTIC CABLES. INSTALL NEW PULL BOXES (PB) AS REQUIRED FOR CONDUITS. SIZE PULL BOXES AS REQUIRED PER FIBER OPTIC CABLE MANUFACTURERS RECOMMENDATIONS.
6. CONDUITS/RACEWAYS, PULL BOXES AND JUNCTION BOXES TO BE INSTALLED WITH 316 STAINLESS STEEL CHANNEL STRUT. MINIMUM STRUT LENGTH TO BE 12 INCHES, WHERE POSSIBLE.
7. PANELS SHALL BE MOUNTED OFF WALLS WITH STRUT, CONDUITS SHALL BE MOUNTED ON STRUT INCLUDING SINGLE RUNS.
8. REPAIR SIDEWALKS AND ROADWAYS DUE TO SITE WORK ADDITIONS, THE EXTENT OF THE REPAIR REQUIRED SHALL BE FIELD VERIFIED PRIOR TO BIDS IN CONJUNCTION WITH THE WORK SHOWN IN THE CONTRACT DOCUMENTS. PRIOR TO TRENCHING, FIELD LOCATE EXISTING GAS LINES, TELEPHONE LINES, SPRINKLER LINES, ETC. COORDINATE WITH OWNER
9. PULL CORDS SHALL BE INSTALLED IN CONDUITS CONTAINING NETWORK CABLES, AND FIBER OPTIC CABLES.
10. CORE HOLES AS REQUIRED TO SUIT INSTALLATION OF CONDUIT AND WIRING/CABLING AS SHOWN. FIELD VERIFY EXACT EXTENT OF WORK REQUIRED.
11. FURNISH PULL BOXES FOR FIBER OPTIC CABLE. COORDINATE EXACT BENDING RADIUS WITH MANUFACTURER.
12. NEW CONDUITS INSTALLED THIS CONTRACT WITH FIBER OPTIC CABLES ARE TO BE LABELED WITH PHENOLIC TAGS (AT BEGINNING TO END) TO INDICATE THE NUMBER OF STRANDS, ORIGINATION AND DESTINATION. TAGS TO BE COLOR CODED ORANGE FOR MULTIMODE.
13. WHERE NEW CONDUITS SHOWN TO BE INSTALLED PASS UNDER ROADWAYS, CONDUITS SHALL BE CONCRETE ENCASED.
14. PRIOR TO EXCAVATION, FIELD LOCATE EXISTING UTILITIES. COORDINATE WITH OWNER.
15. AREAS WHERE CAMERAS ARE SHOWN TO BE INSTALLED SHALL BE CLASSIFIED AS NEMA 4, UNLESS CALLED OUT OTHERWISE.
16. THE ASSOCIATED INSTRUMENTATION DRAWINGS SHOW EXISTING WIRES AND TERMINAL NUMBERS REQUIRED TO PROPERLY INTERFACE WITH NEW EQUIPMENT. THIS INFORMATION WAS COLLECTED FROM AS-BUILT DRAWINGS AND EXTENSIVE FIELD VERIFICATION. THE INFORMATION SHALL BE USED AS A GUIDE IN RE-TERMINATION. IT SHALL REMAIN THE CONTRACTOR'S RESPONSIBILITY TO EXAMINE THE WIRING AND TO REVISE TO SUIT AS REQUIRED. CHANGES IN THE CONTRACT OR COST WILL NOT BE GRANTED FOR THIS COORDINATION. IT IS THE CONTRACTOR'S RESPONSIBILITY TO EXAMINE PROPOSED WORK SHOWN.
17. CONDUIT ROUTINGS SHOWN ON BACKGROUND PLANS ARE PROPOSED ROUTINGS ONLY. EXACT CONDUIT ROUTINGS AND LENGTH SHALL BE FIELD LOCATED AND VERIFIED BY THE CONTRACTOR. COORDINATE CONDUIT ROUTING IN FINISHED AREAS WITH OWNER. CONDUIT TO BE CONCEALED IN THESE AREAS.
18. RACEWAYS, PULL BOXES AND JUNCTION BOXES TO BE INSTALLED WITH 316 STAINLESS STEEL FASTENERS SUPPORTS, AND THREADED ROD, ETC. (CHANNEL STRUT TO ALSO BE STAINLESS STEEL). MINIMUM STRUT LENGTH TO BE 12 INCHES, WHERE POSSIBLE. TYPICAL FOR NEMA 12, 4, AND 7 AREAS.
19. WIRING FOR STARTERS SHALL BE IN ACCORDANCE WITH NEMA CLASS II B STANDARDS. SUBMIT ENGINEERED SHOP DRAWINGS FOR ALL STARTERS SHOWN TO BE WIRED.
20. WIRE NUMBERS (1, 3, 5, ETC.) SHALL BE PREFIXED WITH STARTER TAG NUMBERS. THE WIRE NUMBER AFTER THE PREFIX SHALL BE THE MANUFACTURER'S WIRE NUMBERING SYSTEM. WIRE MARKERS SHALL BE USED AT EACH WIRE TERMINATION POINT.
21. IN AREAS WHERE EQUIPMENT AND CONDUIT IS REMOVED, REPAIR WALL AND FLOOR SURFACES AS REQUIRED TO MATCH SURROUNDING AREA. WHERE DEVICES ARE REMOVED FROM CONCEALED BOXES, FURNISH AND INSTALL A BLANK COVER ON THE BOX.
22. FIBER OPTIC CABLE SHALL BE AS CALLED OUT ON SYSTEM CONFIGURATION DRAWINGS, MULTIMODE, ALL DIELECTRIC, SUITABLE FOR INSTALLATION UNDERGROUND IN WET CONDUIT.

GENERAL NOTES:

1. PRIOR TO SUBMITTING A BID FOR THE WORK DETAILED UNDER THIS CONTRACT, BIDDER SHALL VISIT THE FLINT WASTEWATER TREATMENT PLANT. THE BIDDER SHALL FULLY ACQUAINT ONESELF WITH EXISTING FIELD CONDITIONS AT EACH SITE. NO BULLETINS WILL BE WRITTEN FOR WORK DUE TO LACK OF VERIFICATION OF EXISTING SITE CONDITIONS AND WIRING.
2. NO WIRES SHALL BE TERMINATED TO TERMINAL STRIPS, OR OTHER EQUIPMENT WITHOUT FIRST VERIFYING SIGNAL TYPE. DAMAGES RESULTING IN LACK OF VERIFICATION SHALL BE BORNE BY THE CONTRACTOR. CONTRACTOR SHALL COORDINATE SIGNAL TYPE AND VOLTAGE WITH I/O CARDS SHOWN.
3. WITHIN CONTROL PANELS, NAMEPLATES SHALL BE PROVIDED TO INDICATE DIFFERENT VOLTAGE LEVELS WITHIN PANELS. ALSO, A NAME TAG (YELLOW BACKGROUND, RED LETTERING) SHALL BE LOCATED ON THE FRONT OF EVERY PANEL INDICATING THAT WHEN MAIN PANEL DISCONNECTED 120V IS STILL PRESENT FROM FIELD DEVICES (YELLOW WIRING/ISOLATED INPUT CARDS.)
4. PHENOLIC TAGS ON FACE OF CONTROL PANELS TO HAVE WHITE BACKGROUND AND BLACK LETTERING (EXCEPT WARNING TAGS; YELLOW BACKGROUND RED LETTERING).
5. PROVIDE SAFETY COVERS ON ALL 480V MOLDED CASE MAIN CIRCUIT BREAKERS TO INSULATE THE INCOMING CABLES AND SIDE CONDUCTORS FROM CONTACT. (TYP. FOR CONTROL PANELS.) PROVIDE BREAKER LOCKS FOR PUMP CIRCUIT BREAKERS (MCP)AND MAIN PANEL BREAKERS.
6. REFER TO WIRING DIAGRAMS FOR ADDITIONAL INFORMATION ON ISOLATED I/O. A COMMON NEUTRAL MAY BE USED FOR SEVERAL ISOLATED INPUTS FROM THE SAME STARTER. PROVIDE NEUTRAL JUMPERS WIRES WITHIN THE PANEL AS REQUIRED.
7. ELECTRICAL MATERIALS AND EQUIPMENT ITEMS SHOWN IN LIGHT LINE WEIGHTS ON THE DRAWINGS ARE EXISTING ITEMS TO REMAIN. ELECTRICAL MATERIALS AND EQUIPMENT ITEMS SHOWN IN HEAVY LINE WEIGHTS ARE NEW THIS CONTRACT.
8. ITEMS SHOWN CROSSHATCHED (OR NOTED TO BE DEMOLISHED) ON THE DRAWINGS ARE EXISTING ITEMS TO BE REMOVED, FROM SITE BY CONTRACTOR.
9. INSTALL A SINGLE CONDUCTOR INSULATED (RHW, THHN, OR XHHW) COPPER GROUND WIRE IN EACH CONDUIT, SIZE AS SHOWN ON DRAWINGS, OR AS A MINIMUM PER THE NATIONAL ELECTRICAL CODE. THIS GROUND WIRE SHALL BE CONNECTED AT EACH END TO THE EQUIPMENT GROUND. THIS ALSO INCLUDES INSTRUMENTATION DEVICES SUCH AS LEVEL, PRESSURE, FLOW TRANSMITTERS, LIMIT SWITCHES, CONDUITS, NETWORK AND I/O CABLES.
10. THE FOLLOWING EXAMPLE COMPONENT IDENTIFICATION SHALL BE USED AS APPROPRIATE:

(F) FIELD MOUNTED, NOT AT STARTER OR OTHER CONTROL PANELS
(S) STARTER PANEL MOUNTED
(MCP)AT MAIN CONTROL PANEL
(1) AT CONTROL PANEL NO.1
(2) AT CONTROL PANEL NO.2
(TCP) AT TEMPERATURE CONTROL PANEL

11. REFER TO DETAIL SHEETS. CONTRACTOR SHALL FURNISH AND INSTALL HARDWARE AND APPURTENANCES (I.E. PIPE TAPS, WETWELL BUBBLER TUBES, VALVES, COPPER TUBING, BALL VALVES, PNEUMATIC PIPING, SPOOL PIECES, ETC.) FOR FIELD DEVICES SHOWN (FLOWMETERS, PRESSURE TRANSMITTERS, LEVEL TRANSMITTERS, ETC.). WORK SHALL BE COORDINATED WITH OTHER TRADES (MECHANICAL INSTRUMENTATION, ETC.) CONTRACTOR SHALL BE RESPONSIBLE FOR SYSTEM COORDINATION AND INSTALLATION.
12. ETHERNET AND FIBER OPTIC TERMINATIONS SHALL BE PERFORMED BY A QUALIFIED REPRESENTATIVE OF CABLE MANUFACTURER, THE CABLES SHALL BE TESTED. NO SPLICING SHALL BE PERMITTED OF FIBER OPTIC CABLES, BETWEEN PANELS. FIBERS SHALL BE TERMINATED AT PATCH PANELS, INCLUDING SPARES.
13. REFER TO THE CABLE MANUFACTURER'S RECOMMENDATIONS FOR MINIMUM BEND RADIUS FOR FIBER OPTIC CABLES. INSTALL NEW PULL BOXES (PB) AS REQUIRED FOR CONDUITS. SIZE PULLBOXES AS REQUIRED PER FIBER OPTIC CABLE MANUFACTURERS RECOMMENDATIONS..
14. CABLES (INCLUDING FIBER, ETHERNET, CONTROL WIRE, ETC.) WHERE PASSING THROUGH A PULLBOX SHALL BE LABELED AND COMPLETELY IDENTIFIED WITH IDENTIFICATION NUMBERS AND ORIGINATION/DESTINATION. THIS ALSO INCLUDES ALL CABLE BUNDLES ENTERING CONTROL PANELS, PULLBOXES, ETC.
15. CONTROL WIRES SHALL BE TAGGED WITH THE PLC I/O ADDRESS IN THE FIELD AND AT THE PANEL.
16. THE FIELD DEVICES SHOWN ON THE P&ID'S, ELECTRICAL BACKGROUNDS, AND DETAILS SHEETS MAKEUP THE FIELD DEVICE EQUIPMENT REQUIREMENTS. NOT ALL FIELD DEVICES REQUIRED ARE SHOWN ON THE P&ID'S.
17. UPS SELECTED SHALL BE COMPATIBLE WITH ISOLATION TRANSFORMERS. (TYP.)
18. REFER TO I/O DRAWING LAYOUT FOR ADDITIONAL SIGNALS NOT SHOWN ON P&ID FLOW DIAGRAMS.

FIBER OPTIC CONVERTER PANEL NOTES:

1. FIBER OPTIC CONVERTER PANEL FCP NO.1, NO.2 AND NO.3 SHALL BE HOUSED IN NEMA 4 STAINLESS STEEL HINGED ENCLOSURES. SIZE AS REQUIRED. (MINIMUM SIZE OF 36 INCHES HIGH BY 24 INCHES WIDE BY 12 INCHES DEEP.) FURNISH 24V DC LOOP POWER SUPPLY FOR 2-WIRE LEVEL TRANSMITTER AS SHOWN. MINIMUM POWER SUPPLY SIZE 10 AMP (1606-XLE240E).
2. FIBER OPTIC CONVERTER PANELS SHALL BE PROVIDED WITH 120V MAIN CIRCUIT BREAKER DISCONNECT SWITCH, TERMINAL BLOCKS, BRANCH CIRCUIT WIRING FOR THE FIBER OPTIC CONVERTERS/POWER SUPPLIES, AND SURGE PROTECTION FOR THE INCOMING 120V POWER. (EDCO SLA SERIES, OR EQUAL.)
3. WITHIN EACH FIBER OPTIC CONVERTER PANEL, FURNISH A SURFACE MOUNTED 48 - PORT FIBER OPTIC PATCH PANEL. (ST STYLE CONNECTORS.) FURNISH SIMPLEX FIBER PATCH CABLES TO CONNECT THE DISCRETE, AND ANALOG FIBER OPTIC CONVERTERS TO THE FIBER CABLING/PATCH PANEL.
4. ENCLOSURES SHALL BE LINED WITH RIGID INSULATION, AND PAINTED WHITE.
5. FURNISH SUNSHIELDS FOR THE TOP, SIDES, AND PANEL DOOR FOR EACH FIBER CONVERTER PANEL THAT IS SHOWN OUTDOORS.
6. POWER SUPPLIES SHALL BE RATED FOR OPERATION IN EXTREME HOT, AND COLD TEMPERATURES.
7. FURNISH VENTS FOR EACH FIBER OPTIC CONTROL PANEL ENCLOSURE.
8. FURNISH ROCKWELL 10 AMP, 24V DC POWER SUPPLY (MIN.) FOR THE ANALOG/DISCRETE FIBER OPTIC CONVERTERS.

TETRA TECH
www.tetratech.com
401 SOUTH WASHINGTON SQUARE, SUITE 100
LANSING, MI, 48933
PHONE: 517.316.3930, FAX: 517.484.8140

MARK	DATE	DESCRIPTION	BY
	5/29/20	ISSUED FOR BIDS	

CITY OF FLINT, MICHIGAN
FLINT WPC AERATION SYSTEM IMPROVEMENTS
INSTRUMENTATION NOTES

PROJ:	200-156238-19001
DESN:	GCJ
DRWN:	JLS
CHKD:	MSJ/WAP

I-002

Copyright: Tetra Tech

Bar Measures 1 inch, otherwise drawing not to scale

5/25/2020 1:24:26 PM - \\TTS073FS1\PROJECTS\ER\156238\200-156238-19001\CAD\SHEETFILES\EI\-002_I-NOTES.DWG - SHANK, JASON

ITEM #	ITEM	MANUFACTURE	PART NUMBER	DESCRIPTION	PORTS
1	SWITCH 1	HIRSCHMANN	MS30-1602SAAE	4-SLOT BACKPLANE, 24V DC	
	MODULE 1	HIRSCHMANN	MM2-4TX1	4X10/100 MBIT/S RJ45	4-COPPER, RJ-45
	MODULE 2	HIRSCHMANN	MM3-4FXM2	4X100 MBIT/S MM SC	4-FIBER, SC CONNECTOR
	MODULE 3	HIRSCHMANN	EMPTY		
	MODULE 4	HIRSCHMANN	EMPTY		

ITEM #	ITEM	MANUFACTURE	PART NUMBER	DESCRIPTION	PORTS
2	SWITCH 2	HIRSCHMANN	MS30-1602SAAE	4-SLOT BACKPLANE, 24V DC	
	MODULE 1	HIRSCHMANN	MM2-4TX1	4X10/100 MBIT/S RJ45	4-COPPER, RJ-45
	MODULE 2	HIRSCHMANN	MM3-4FXM2	4X100 MBIT/S MM SC	4-FIBER, SC CONNECTOR
	MODULE 3	HIRSCHMANN	MM3-4FXM2	4X100 MBIT/S MM SC	4-FIBER, SC CONNECTOR
	MODULE 4	HIRSCHMANN	EMPTY		

ITEM #	ITEM	MANUFACTURE	PART NUMBER	DESCRIPTION	PORTS
3	SWITCH 3	HIRSCHMANN	MS30-1602SAAE	4-SLOT BACKPLANE, 24V DC	
	MODULE 1	HIRSCHMANN	MM2-4TX1	4X10/100 MBIT/S RJ45	4-COPPER, RJ-45
	MODULE 2	HIRSCHMANN	MM3-4FXM2	4X100 MBIT/S MM SC	4-FIBER, SC CONNECTOR
	MODULE 3	HIRSCHMANN	MM3-4FXM2	4X100 MBIT/S MM SC	4-FIBER, SC CONNECTOR
	MODULE 4	HIRSCHMANN	EMPTY		

ETHERNET SWITCH BILL OF MATERIAL (BPP, AND EXISTING BCP)

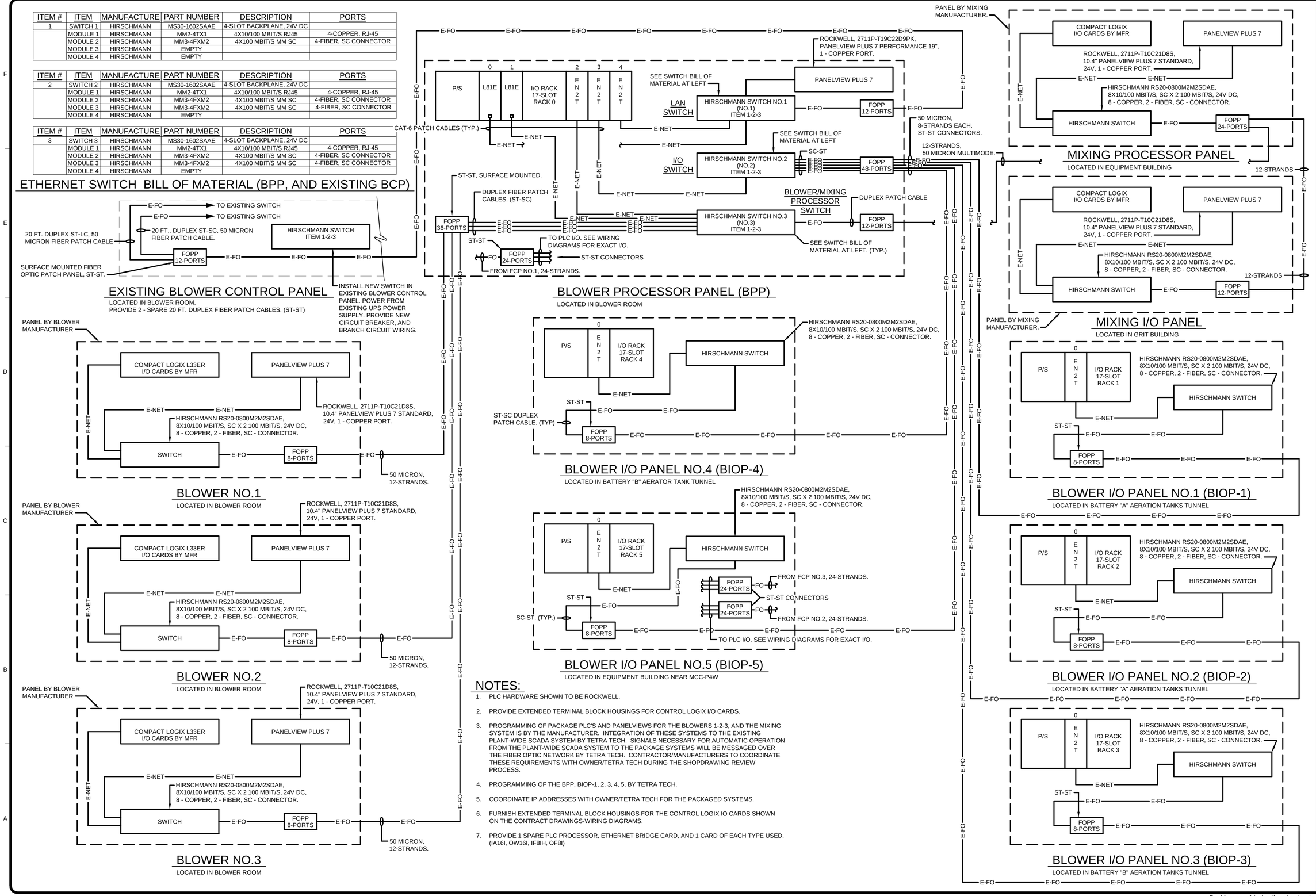

NOTES:

1. PLC HARDWARE SHOWN TO BE ROCKWELL.
2. PROVIDE EXTENDED TERMINAL BLOCK HOUSINGS FOR CONTROL LOGIX I/O CARDS.
3. PROGRAMMING OF PACKAGE PLC'S AND PANELVIEWS FOR THE BLOWERS 1-2-3, AND THE MIXING SYSTEM IS BY THE MANUFACTURER. INTEGRATION OF THESE SYSTEMS TO THE EXISTING PLANT-WIDE SCADA SYSTEM BY TETRA TECH. SIGNALS NECESSARY FOR AUTOMATIC OPERATION FROM THE PLANT-WIDE SCADA SYSTEM TO THE PACKAGE SYSTEMS WILL BE MESSAGED OVER THE FIBER OPTIC NETWORK BY TETRA TECH. CONTRACTOR/MANUFACTURERS TO COORDINATE THESE REQUIREMENTS WITH OWNER/TETRA TECH DURING THE SHOPDRAWING REVIEW PROCESS.
4. PROGRAMMING OF THE BPP, BIOP-1, 2, 3, 4, 5, BY TETRA TECH.
5. COORDINATE IP ADDRESSES WITH OWNER/TETRA TECH FOR THE PACKAGED SYSTEMS.
6. FURNISH EXTENDED TERMINAL BLOCK HOUSINGS FOR THE CONTROL LOGIX IO CARDS SHOWN ON THE CONTRACT DRAWINGS-WIRING DIAGRAMS.
7. PROVIDE 1 SPARE PLC PROCESSOR, ETHERNET BRIDGE CARD, AND 1 CARD OF EACH TYPE USED. (IA16I, OW16I, IF8IH, OF8I)

TETRA TECH
www.tetratech.com
401 SOUTH WASHINGTON SQUARE, SUITE 100
LANSING, MI. 48933
PHONE: 517.316.3930, FAX: 517.484.8140

MARK	DATE	DESCRIPTION
	5/29/20	ISSUED FOR BIDS

BY

CITY OF FLINT, MICHIGAN
FLINT WPC AERATION SYSTEM IMPROVEMENTS
SYSTEM CONFIGURATION DIAGRAM

PROJ:	200-156238-19001
DESN:	GCJ
DRWN:	JLS
CHKD:	MSJ/WAP

I-100

Copyright: Tetra Tech

Bar Measures 1 inch, otherwise drawing not to scale

5/26/2020 11:32:53 PM - \\TTS073FS1\PROJECTS\IER\156238\200-156238-19001\CAD\SHEETFILES\EI-100_SYS CONF.DWG - SHANK, JASON

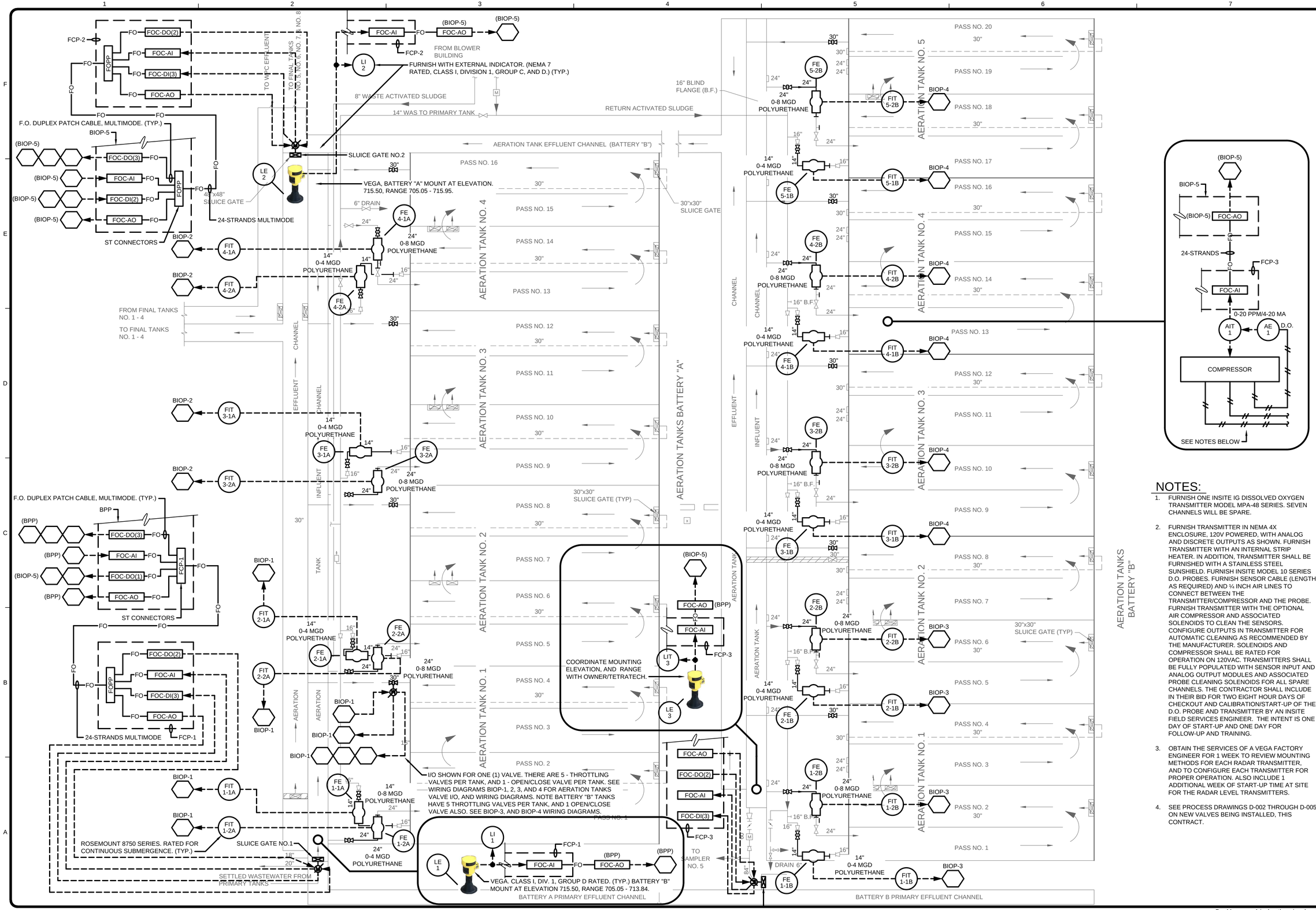

NOTES:

1. FURNISH ONE INSITE IG DISSOLVED OXYGEN TRANSMITTER MODEL MPA-48 SERIES. SEVEN CHANNELS WILL BE SPARE.
2. FURNISH TRANSMITTER IN NEMA 4X ENCLOSURE, 120V POWERED, WITH ANALOG AND DISCRETE OUTPUTS AS SHOWN. FURNISH TRANSMITTER WITH AN INTERNAL STRIP HEATER. IN ADDITION, TRANSMITTER SHALL BE FURNISHED WITH A STAINLESS STEEL SUNSHIELD. FURNISH INSITE MODEL 10 SERIES D.O. PROBES. FURNISH SENSOR CABLE (LENGTH AS REQUIRED) AND ¼ INCH AIR LINES TO CONNECT BETWEEN THE TRANSMITTER/COMPRESSOR AND THE PROBE. FURNISH TRANSMITTER WITH THE OPTIONAL AIR COMPRESSOR AND ASSOCIATED SOLENOIDS TO CLEAN THE SENSORS. CONFIGURE OUTPUTS IN TRANSMITTER FOR AUTOMATIC CLEANING AS RECOMMENDED BY THE MANUFACTURER. SOLENOIDS AND COMPRESSOR SHALL BE RATED FOR OPERATION ON 120VAC. TRANSMITTERS SHALL BE FULLY POPULATED WITH SENSOR INPUT AND ANALOG OUTPUT MODULES AND ASSOCIATED PROBE CLEANING SOLENOIDS FOR ALL SPARE CHANNELS. THE CONTRACTOR SHALL INCLUDE IN THEIR BID FOR TWO EIGHT HOUR DAYS OF CHECKOUT AND CALIBRATION/START-UP OF THE D.O. PROBE AND TRANSMITTER BY AN INSITE FIELD SERVICES ENGINEER. THE INTENT IS ONE DAY OF START-UP AND ONE DAY FOR FOLLOW-UP AND TRAINING.
3. OBTAIN THE SERVICES OF A VEGA FACTORY ENGINEER FOR 1 WEEK TO REVIEW MOUNTING METHODS FOR EACH RADAR TRANSMITTER, AND TO CONFIGURE EACH TRANSMITTER FOR PROPER OPERATION. ALSO INCLUDE 1 ADDITIONAL WEEK OF START-UP TIME AT SITE FOR THE RADAR LEVEL TRANSMITTERS.
4. SEE PROCESS DRAWINGS D-002 THROUGH D-005 ON NEW VALVES BEING INSTALLED, THIS CONTRACT.

TETRA TECH
www.tetratech.com
401 SOUTH WASHINGTON SQUARE, SUITE 100
LANSING, MI, 48933
PHONE: 517.316.3930, FAX: 517.484.8140

MARK	DATE	DESCRIPTION	BY
	5/29/20	ISSUED FOR BIDS	

CITY OF FLINT, MICHIGAN
FLINT WPC AERATION SYSTEM IMPROVEMENTS

P&ID PROCESS FLOW DIAGRAM

PROJ:	200-156238-19001
DESN:	GCJ
DRWN:	JLS
CHKD:	MSJ/WAP

I-200

Copyright: Tetra Tech

Bar Measures 1 inch, otherwise drawing not to scale

5/26/2020 11:40:45 PM - \\TTSO73FS1□ROJECTS\IER\156238\200-156238-19001\CAD\SHEET\FILES\EI-200_P&ID.DWG - SHANK, JASON

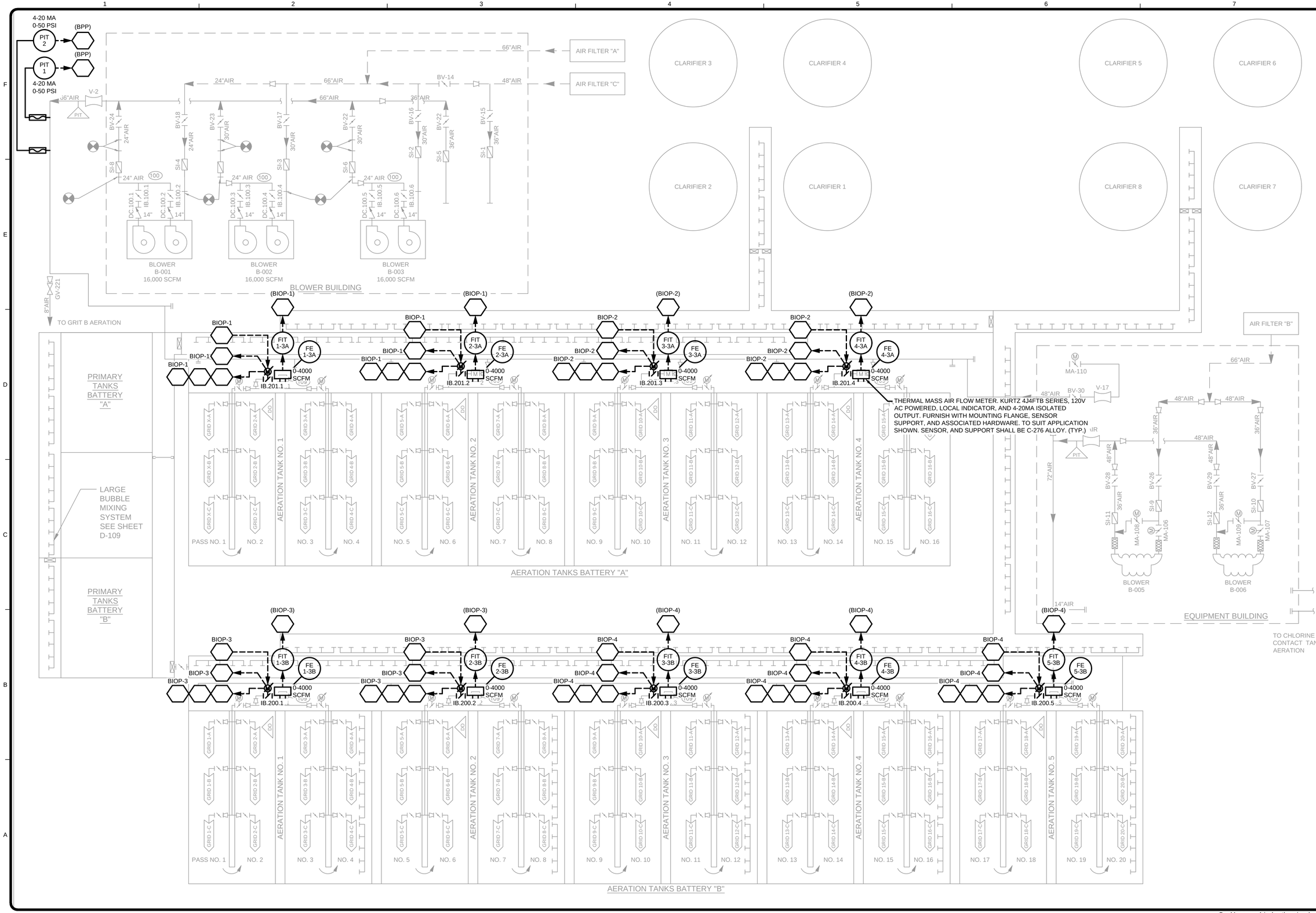

TETRA TECH
www.tetratech.com
401 SOUTH WASHINGTON SQUARE, SUITE 100
LANSING, MI. 48933
PHONE: 517.316.3930, FAX: 517.484.8140

MARK	DATE	DESCRIPTION	BY
	5/29/20	ISSUED FOR BIDS	

CITY OF FLINT, MICHIGAN
FLINT WPC AERATION SYSTEM IMPROVEMENTS
P&ID
PROCESS FLOW DIAGRAM

PROJ:	200-156238-19001
DESN:	GCJ
DRWN:	JLS
CHKD:	MSJ/WAP

I-201

Copyright: Tetra Tech

Bar Measures 1 inch, otherwise drawing not to scale

5/27/2020 12:11:21 AM - \\TTS073FS1...ROJECTS\IER\156238\200-156238-19001\CAD\SHEETFILES\EI-201_P&ID_III.DWG - SHANK, JASON

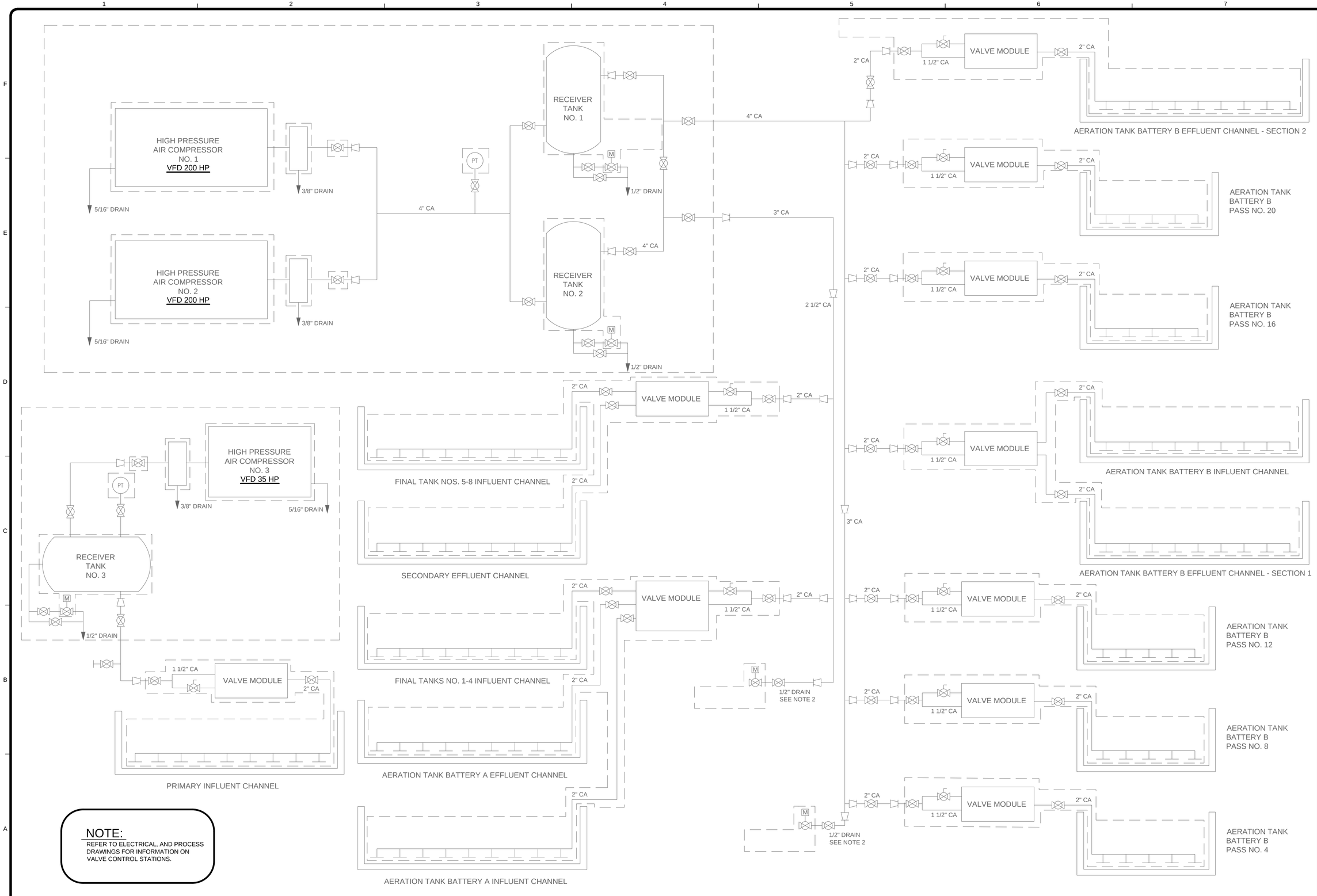

NOTE:

REFER TO ELECTRICAL, AND PROCESS DRAWINGS FOR INFORMATION ON VALVE CONTROL STATIONS.

TETRA TECH
www.tetratech.com
401 SOUTH WASHINGTON SQUARE, SUITE 100
LANSING, MI. 48933
PHONE: 517.316.3930, FAX: 517.484.8140

MARK	DATE	DESCRIPTION	BY
	5/29/20	ISSUED FOR BIDS	

CITY OF FLINT, MICHIGAN

FLINT WPC AERATION SYSTEM IMPROVEMENTS

P&ID PROCESS FLOW DIAGRAM

PROJ:	200-156238-19001
DESN:	GCJ
DRWN:	JLS
CHKD:	MSJ/WAP

I-202

Copyright: Tetra Tech

Bar Measures 1 inch, otherwise drawing not to scale

5/25/2020 4:29:26 PM - \\TTS073FS1\PROJECTS\ER\156238\200-156238-19001\CAD\SHEETFILES\EI\-202_P&ID_II.DWG - SHANK, JASON

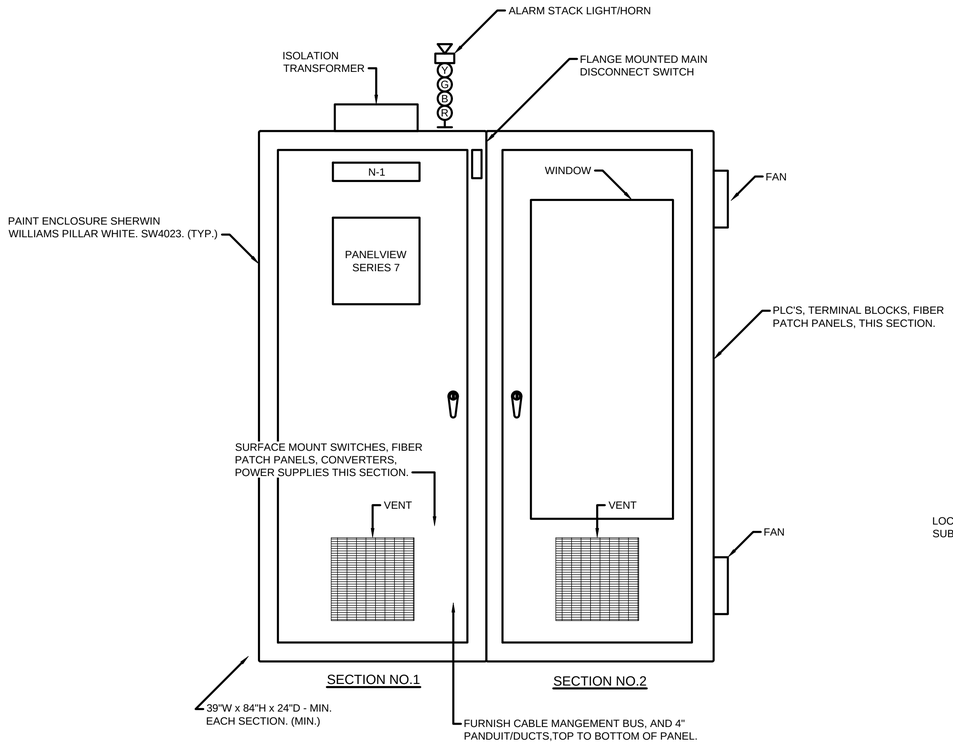

BLOWER PROCESSOR PANEL (BPP) - LAYOUT

NEMA 12 ENCLOSURE

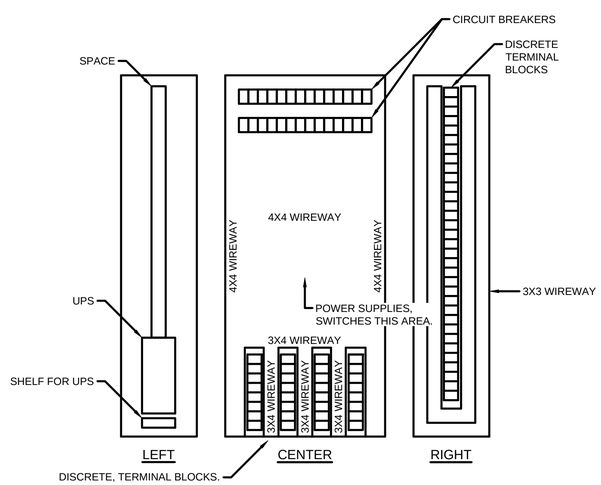

SUBPLATE LAYOUT - SECTION NO.1

NO SCALE
NOTE: NOT ALL SUBPLATE DEVICES ARE SHOWN.

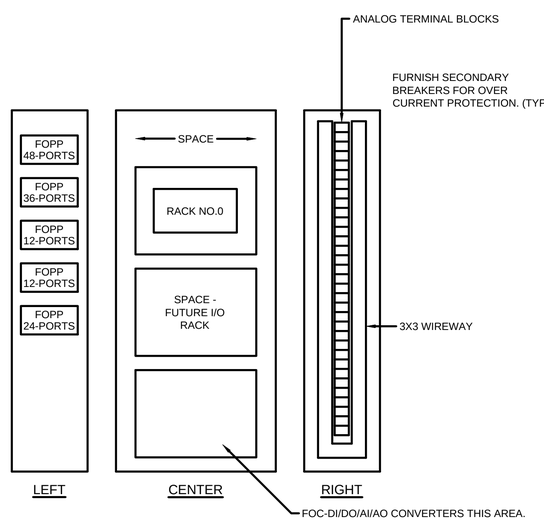

SUBPLATE LAYOUT - SECTION NO.2

NO SCALE
NOTE: NOT ALL SUBPLATE DEVICES ARE SHOWN.

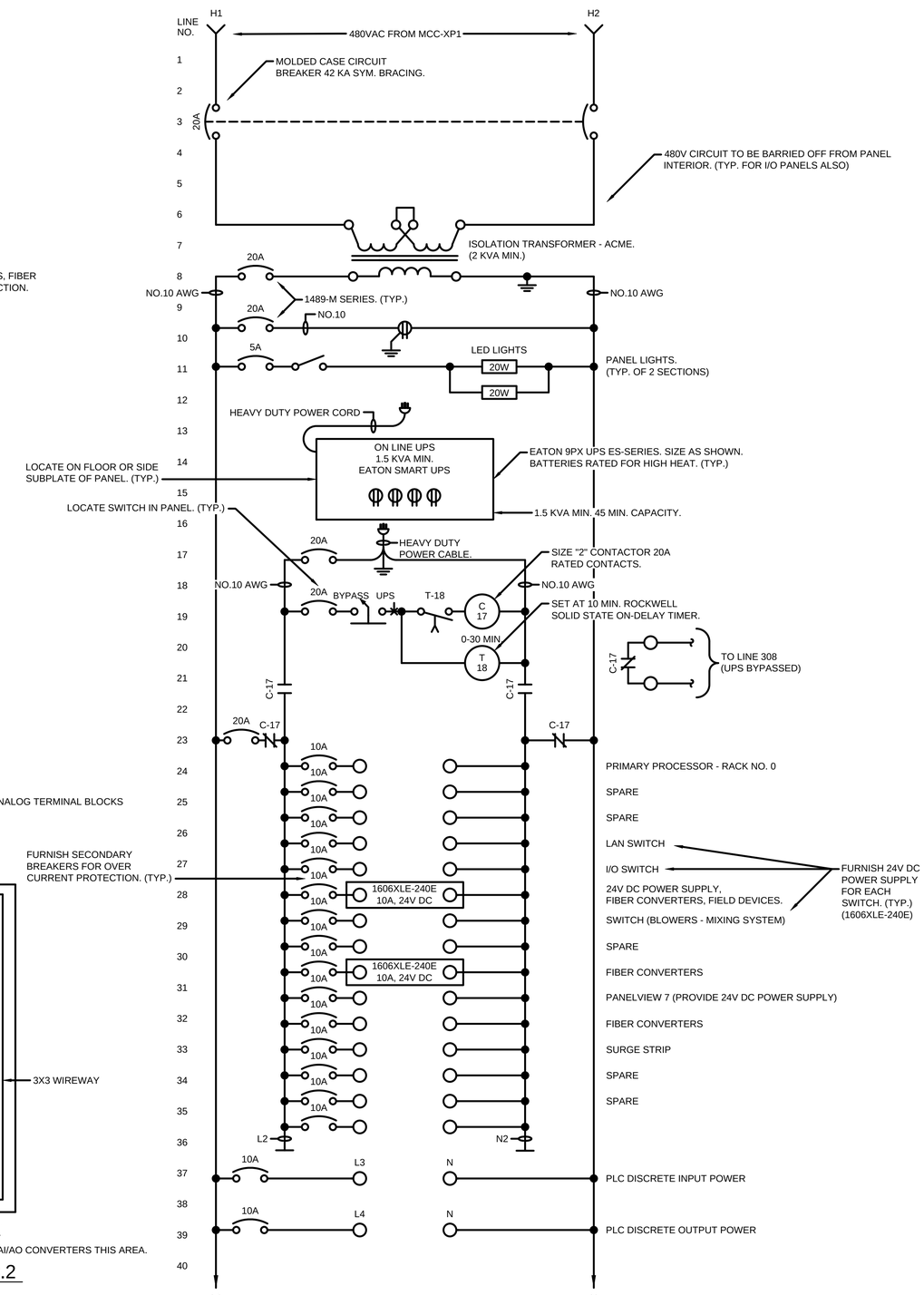

BLOWER PROCESSOR PANEL (BPP) WIRING DIAGRAM

NO SCALE

TETRA TECH
www.tetratech.com
401 SOUTH WASHINGTON SQUARE, SUITE 100
LANSING, MI. 48933
PHONE: 517.316.3930, FAX: 517.484.8140

MARK	DATE	DESCRIPTION	BY
	5/29/20	ISSUED FOR BIDS	

CITY OF FLINT, MICHIGAN
FLINT WPC AERATION SYSTEM IMPROVEMENTS
INSTRUMENTATION
BLOWER PROCESSOR PANEL (BPP) PANEL LAYOUT, WIRING DIAGRAM

PROJ:	200-156238-19001
DESN:	GCJ
DRWN:	JLS
CHKD:	MSJ/WAP

I-300

Copyright: Tetra Tech

Bar Measures 1 inch, otherwise drawing not to scale

5/27/2020 12:14:55 AM - \\TTSO73FS1\PROJECTS\ER\156238\200-156238-19001\CAD\SHEETFILES\EI-300_BLWR PROCESSOR PNL 1 LAYOUT_WIR DIA.DWG - SHANK, JASON

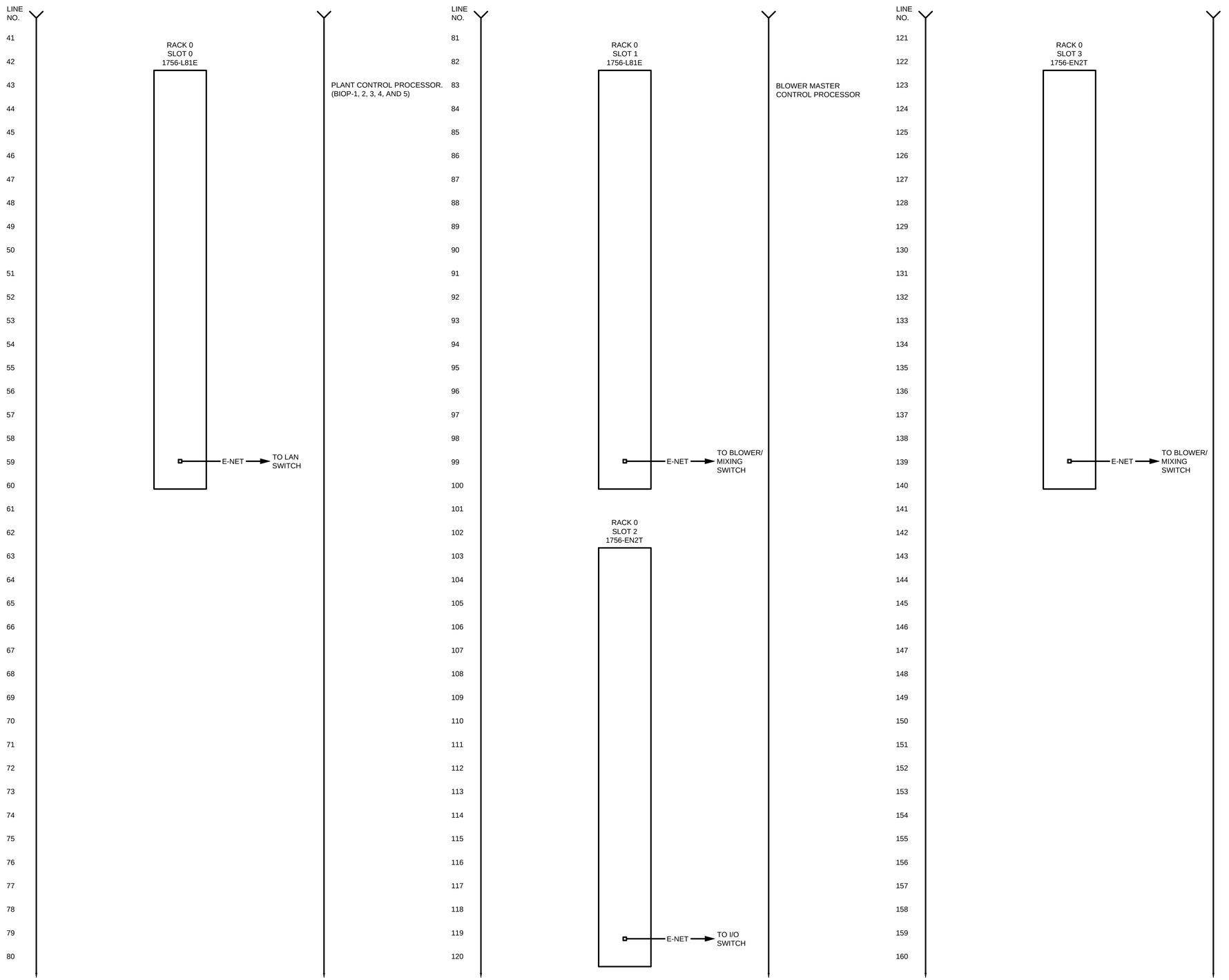

TETRA TECH
www.tetratech.com
401 SOUTH WASHINGTON SQUARE, SUITE 100
LANSING, MI. 48933
PHONE: 517.316.3930, FAX: 517.484.8140

MARK	DATE	DESCRIPTION	BY
	5/29/20	ISSUED FOR BIDS	

CITY OF FLINT, MICHIGAN
FLINT WPC AERATION
SYSTEM IMPROVEMENTS
INSTRUMENTATION
BLOWER PROCESSOR PANEL (BPP)
PANEL LAYOUT, WIRING DIAGRAM, RACK 0

PROJ:	200-156238-19001
DESN:	GCJ
DRWN:	JLS
CHKD:	MSJ/WAP

I-301

Copyright: Tetra Tech

Bar Measures 1 inch, otherwise drawing not to scale

5/27/2020 12:17:01 AM - \\TTS073FS1\PROJECTS\IER\156238\200-156238-19001\CAD\SHEETFILES\EI-301_BLWR PROCESSOR PANEL BPP WIR DIA.DWG - SHANK, JASON

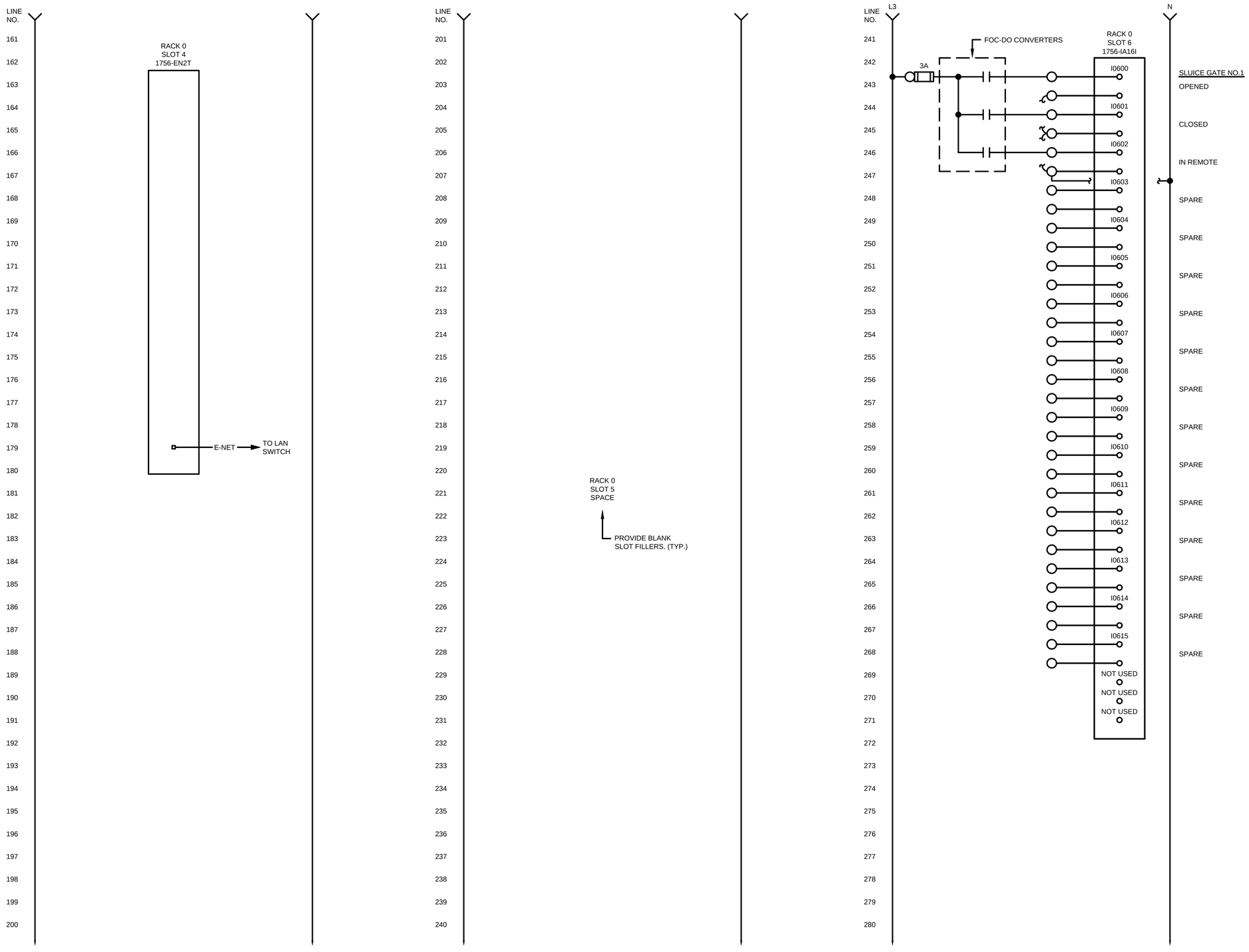

TETRA TECH
www.tetratech.com
401 SOUTH WASHINGTON SQUARE, SUITE 100
LANSING, MI. 48933
PHONE: 517.316.3930, FAX: 517.484.8140

MARK	DATE	DESCRIPTION	BY
	5/29/20	ISSUED FOR BIDS	

CITY OF FLINT, MICHIGAN
FLINT WPC AERATION SYSTEM IMPROVEMENTS
INSTRUMENTATION
BLOWER PROCESSOR PANEL (BPP)
PANEL LAYOUT, WIRING DIAGRAM, RACK 0

PROJ: 200-156238-19001
DESN: GCJ
DRWN: JLS
CHKD: MSJ/WAP

I-302

Copyright: Tetra Tech

Bar Measures 1 inch, otherwise drawing not to scale

5/25/2020 5:15:54 PM - \\TTS073FS1\PROJECTS\IER\156238\200-156238-19001\CAD\SHEETFILES\EI-302_BLWR PROCESSOR PANEL BPP WIR DIA_ILDWG - SHANK, JASON

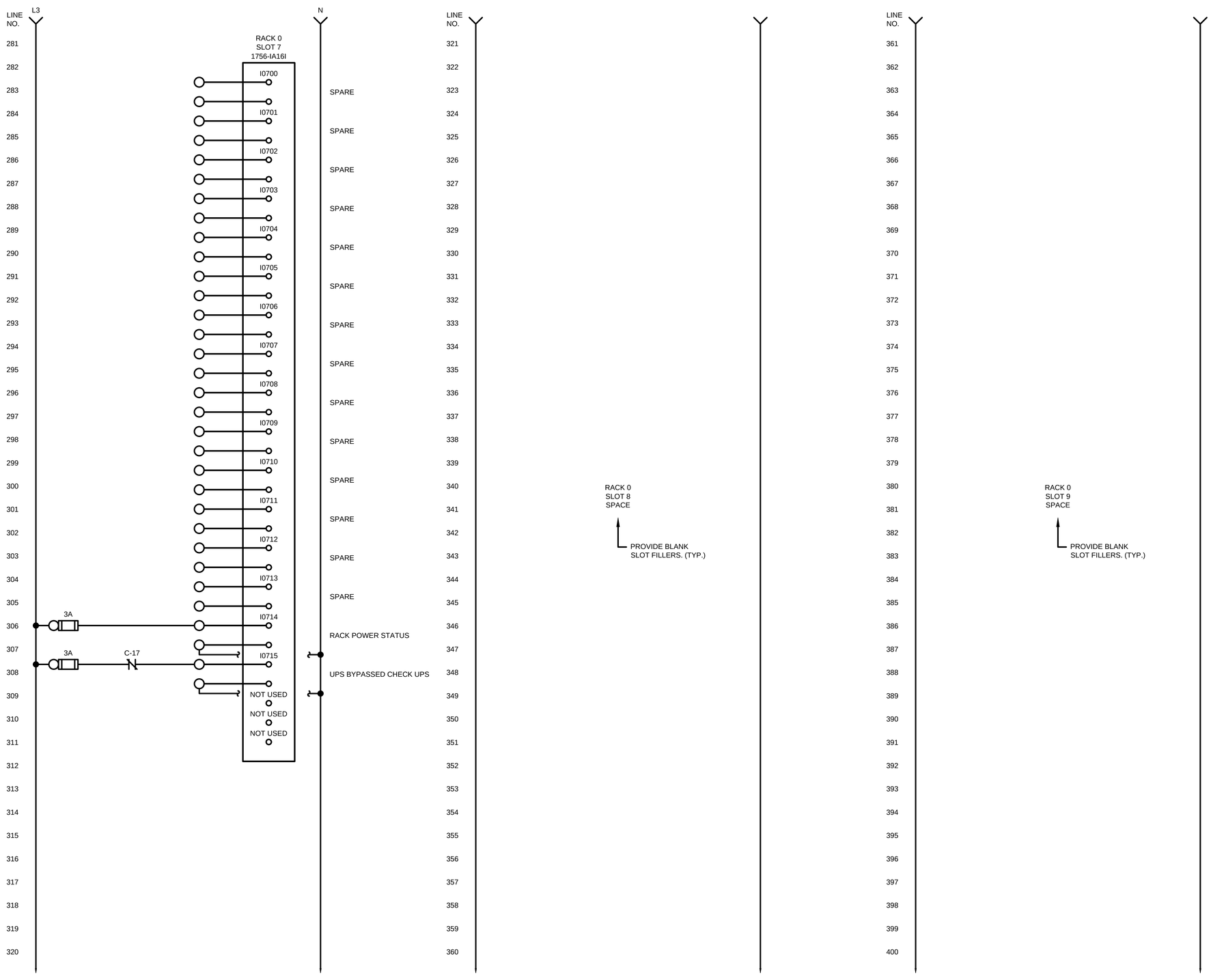

TETRA TECH
www.tetratech.com
401 SOUTH WASHINGTON SQUARE, SUITE 100
LANSING, MI, 48933
PHONE: 517.316.3930, FAX: 517.484.8140

MARK	DATE	DESCRIPTION	BY
	5/29/20	ISSUED FOR BIDS	

CITY OF FLINT, MICHIGAN
FLINT WPC AERATION
SYSTEM IMPROVEMENTS
INSTRUMENTATION
BLOWER PROCESSOR PANEL (BPP)
PANEL LAYOUT, WIRING DIAGRAM, RACK 0

PROJ:	200-156238-19001
DESN:	GCJ
DRWN:	JLS
CHKD:	MSJ/WAP

I-303

Copyright: Tetra Tech

Bar Measures 1 inch, otherwise drawing not to scale

5/25/2020 4:54:10 PM - \\TTS073FS1\PROJECTS\IER\156238\200-156238-19001\CAD\SHEETFILES\EI-303_BLWR PROCESSOR PANEL BPP WIR DIA_III.DWG - SHANK, JASON

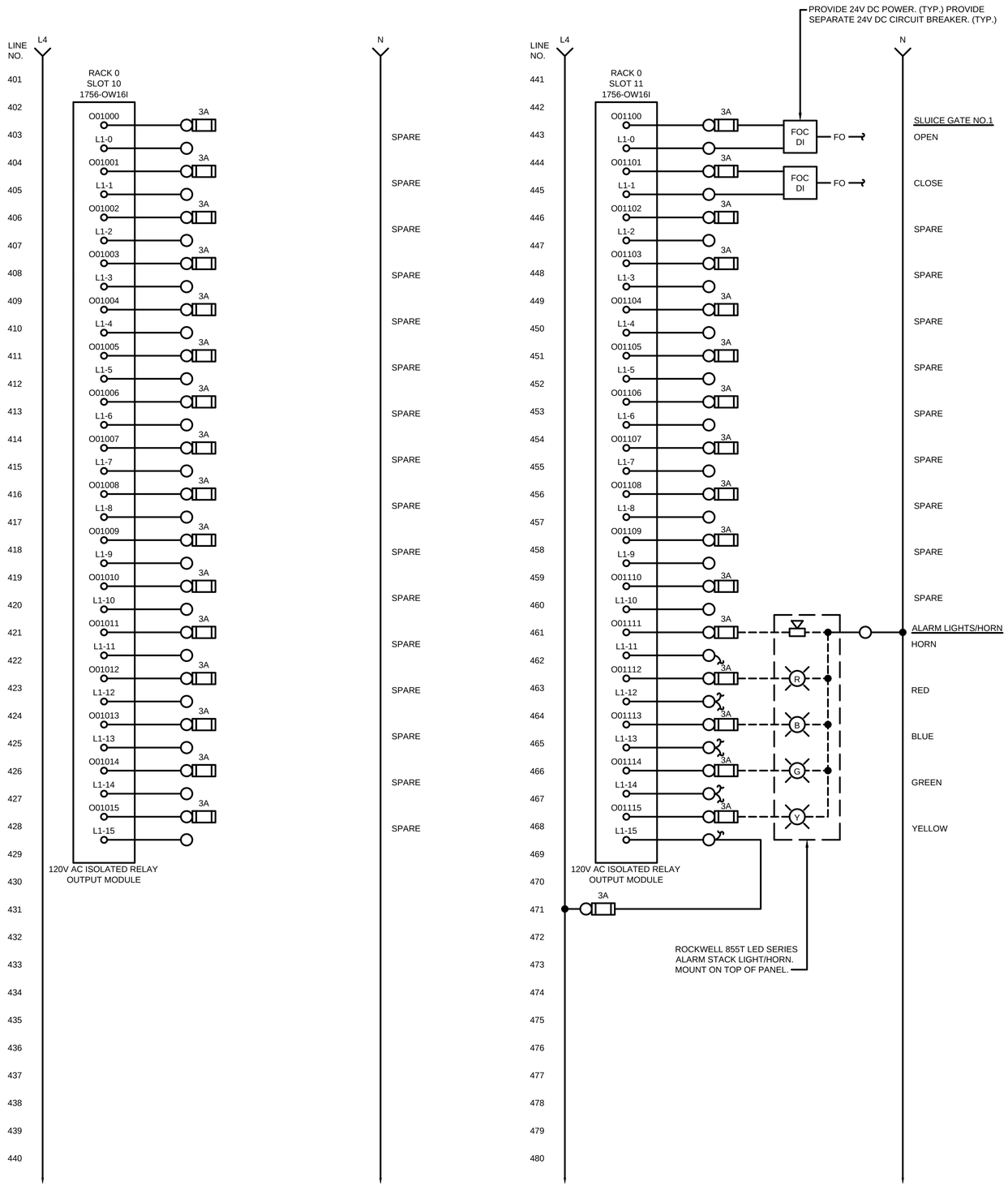

TETRA TECH
www.tetratech.com
401 SOUTH WASHINGTON SQUARE, SUITE 100
LANSING, MI. 48933
PHONE: 517.316.3930, FAX: 517.484.8140

MARK	DATE	DESCRIPTION	BY
	5/29/20	ISSUED FOR BIDS	

CITY OF FLINT, MICHIGAN
FLINT WPC AERATION SYSTEM IMPROVEMENTS
INSTRUMENTATION
BLOWER PROCESSOR PANEL (BPP)
PANEL LAYOUT, WIRING DIAGRAM, RACK 0

PROJ:	200-156238-19001
DESN:	GCJ
DRWN:	JLS
CHKD:	MSJ/WAP

I-304

Copyright: Tetra Tech

Bar Measures 1 inch, otherwise drawing not to scale

5/25/2020 4:59:50 PM - \\TTSO73FS1□ROJECTS\IER\156238\200-156238-19001\CAD\SHEETFILES\EI-304_BLWR PROCESSOR PANEL BPP WIR DIA_IV.DWG - SHANK, JASON

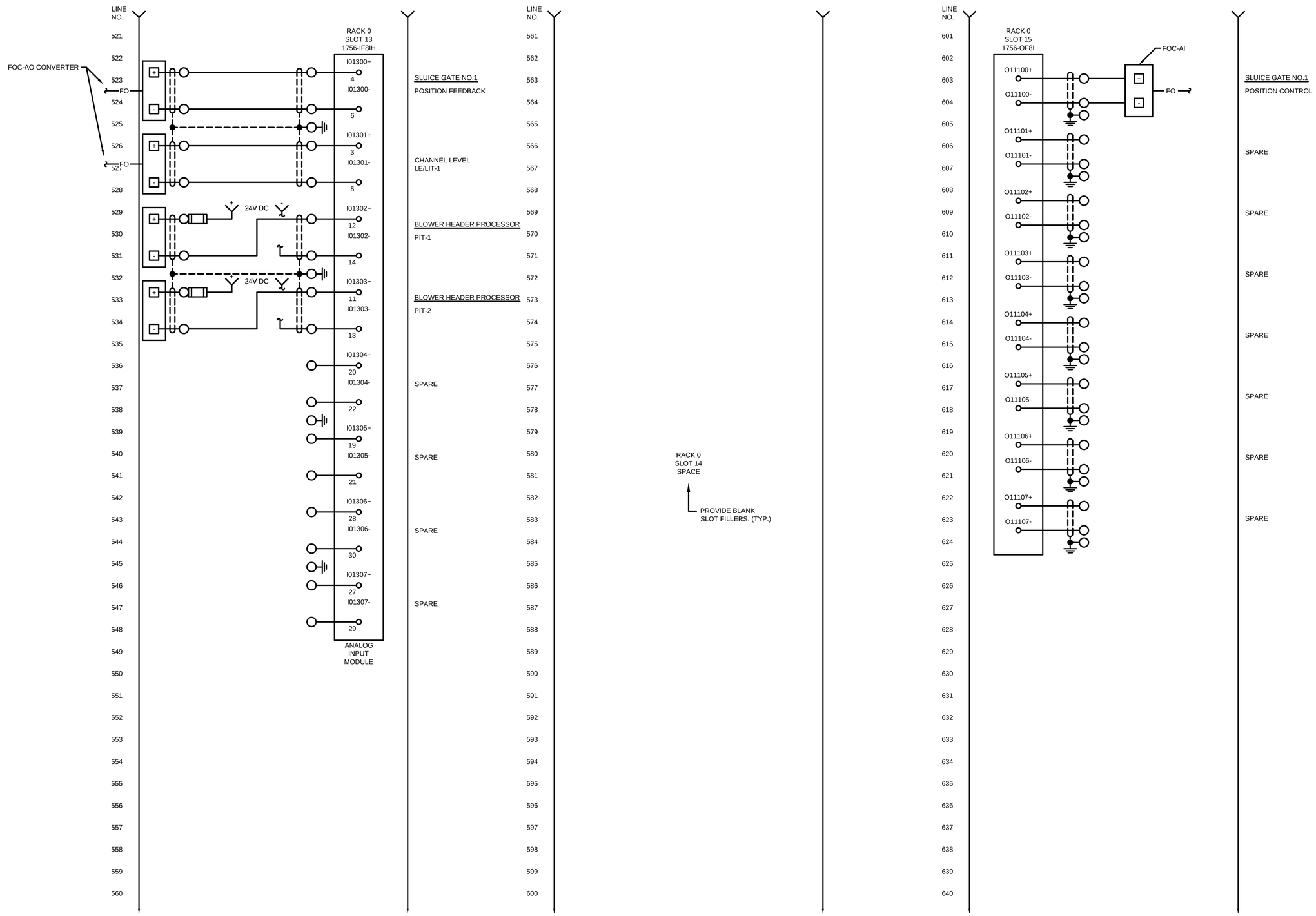

TETRA TECH
www.tetratech.com
401 SOUTH WASHINGTON SQUARE, SUITE 100
LANSING, MI. 48933
PHONE: 517.316.3930, FAX: 517.484.8140

MARK	DATE	DESCRIPTION	BY
	5/29/20	ISSUED FOR BIDS	

CITY OF FLINT, MICHIGAN
FLINT WPC AERATION
SYSTEM IMPROVEMENTS
INSTRUMENTATION
BLOWER PROCESSOR PANEL (BPP)
PANEL LAYOUT, WIRING DIAGRAM, RACK 0

PROJ:	200-156238-19001
DESN:	GCJ
DRWN:	JLS
CHKD:	MSJ/WAP

I-305

Copyright: Tetra Tech

Bar Measures 1 inch, otherwise drawing not to scale

5/25/2020 5:02:03 PM - \\TTS073FS1...ROJECTS\IER\156238\200-156238-19001\CAD\SHEETFILES\EI\I-305_BLWR PROCESSOR PANEL BPP WIR DIA_V.DWG - SHANK, JASON

TETRA TECH
www.tetratech.com
401 SOUTH WASHINGTON SQUARE, SUITE 100
LANSING, MI, 48933
PHONE: 517.316.3930, FAX: 517.484.8140

MARK	DATE	DESCRIPTION	BY
	5/29/20	ISSUED FOR BIDS	

CITY OF FLINT, MICHIGAN
FLINT WPC AERATION
SYSTEM IMPROVEMENTS
INSTRUMENTATION
BLOWER PROCESSOR PANEL (BPP)
PANEL LAYOUT, WIRING DIAGRAM, RACK 0

PROJ:	200-156238-19001
DESN:	GCJ
DRWN:	JLS
CHKD:	MSJ/WAP

I-306

Copyright: Tetra Tech

Bar Measures 1 inch, otherwise drawing not to scale

5/25/2020 5:04:06 PM - \\TTS073FS1_ROJECTS\IER\156238\200-156238-19001\CAD\SHEETFILES\EI-306_BLWR PROCESSOR PANEL BPP WIR DIA_VI.DWG - SHANK, JASON

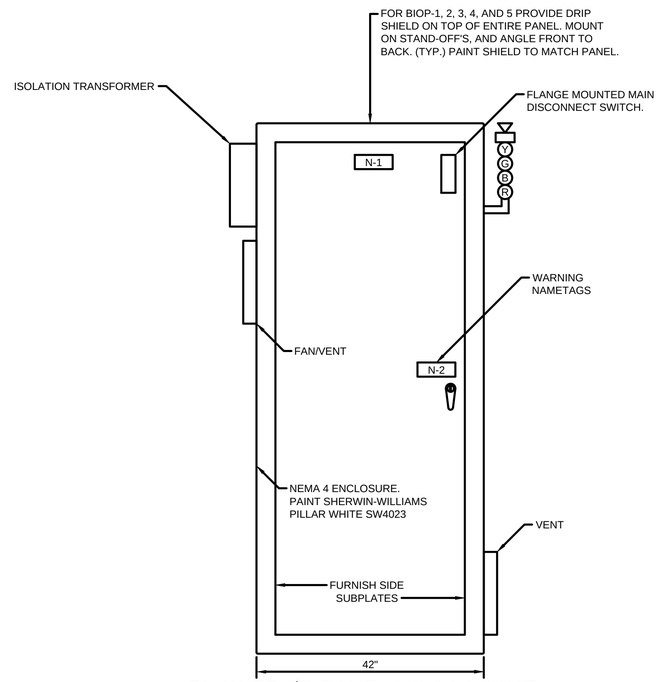

BLOWER I/O PANEL NO.1 LAYOUT

NEMA 4 ENCLOSURE
SIZE: - 60"H X 42"W X 24"D - MINIMUM

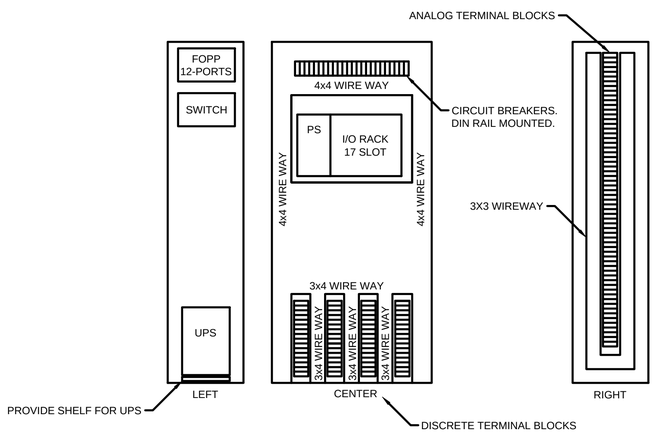

SUBPLATE LAYOUT

NOTE: NOT ALL SUBPLATE DEVICES ARE SHOWN.
NO SCALE

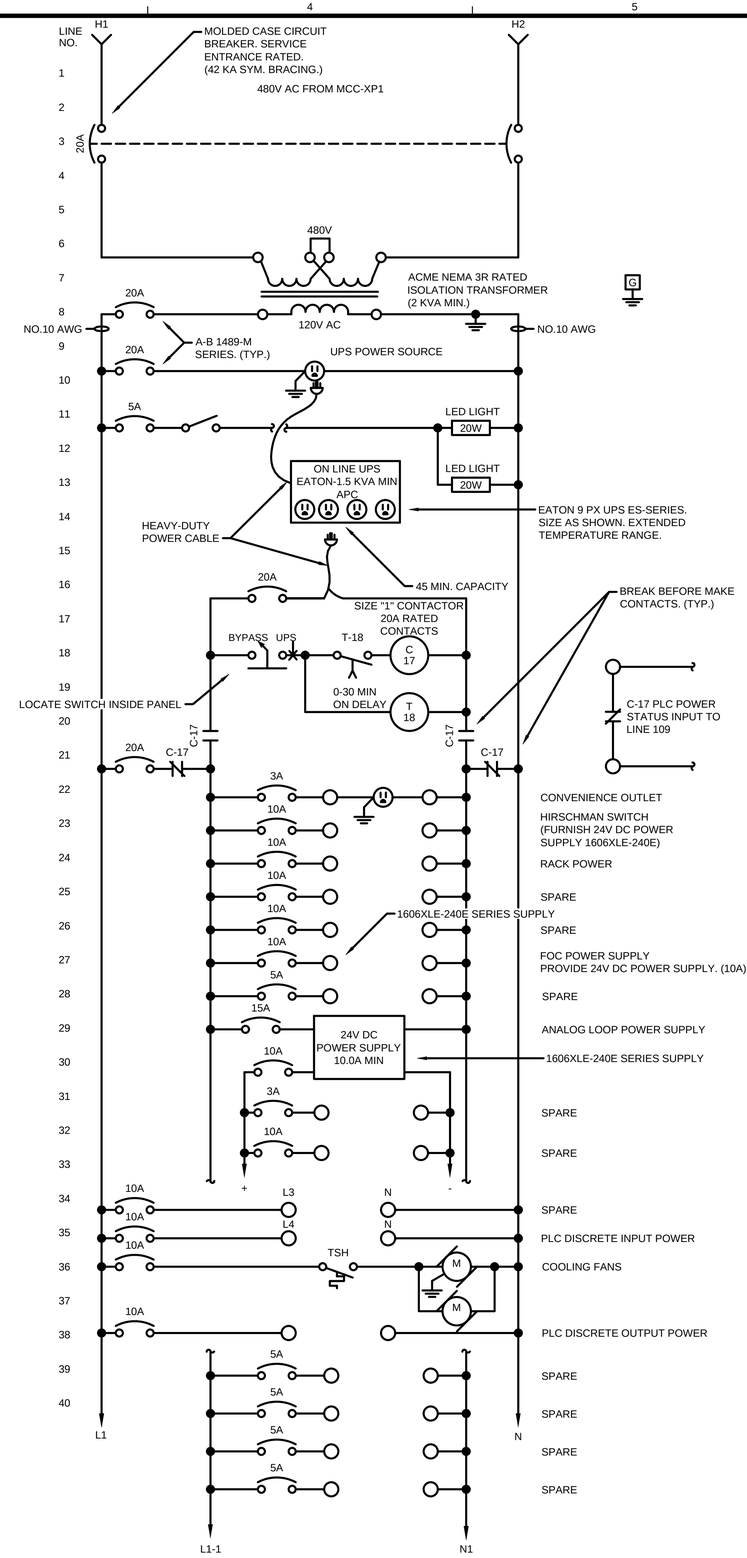

TETRA TECH
www.tetratech.com
401 SOUTH WASHINGTON SQUARE, SUITE 100
LANSING, MI. 48933
PHONE: 517.316.3930, FAX: 517.484.8140

MARK	DATE	DESCRIPTION	BY
	5/29/20	ISSUED FOR BIDS	

CITY OF FLINT, MICHIGAN
FLINT WPC AERATION SYSTEM IMPROVEMENTS
INSTRUMENTATION
BLOWER I/O PANEL NO.1
RACK 1 WIRING DIAGRAM

PROJ:	200-156238-19001
DESN:	GCJ
DRWN:	JLS
CHKD:	MSJ/WAP

I-307

Copyright: Tetra Tech

Bar Measures 1 inch, otherwise drawing not to scale

5/25/2020 5:24:22 PM - \\TTSO73FS1\PROJECTS\IER\156238\200-156238-19001\CAD\SHEETFILES\EI-307_BLWR PNL 1 LAYOUT_WIR DIA.DWG - SHANK, JASON

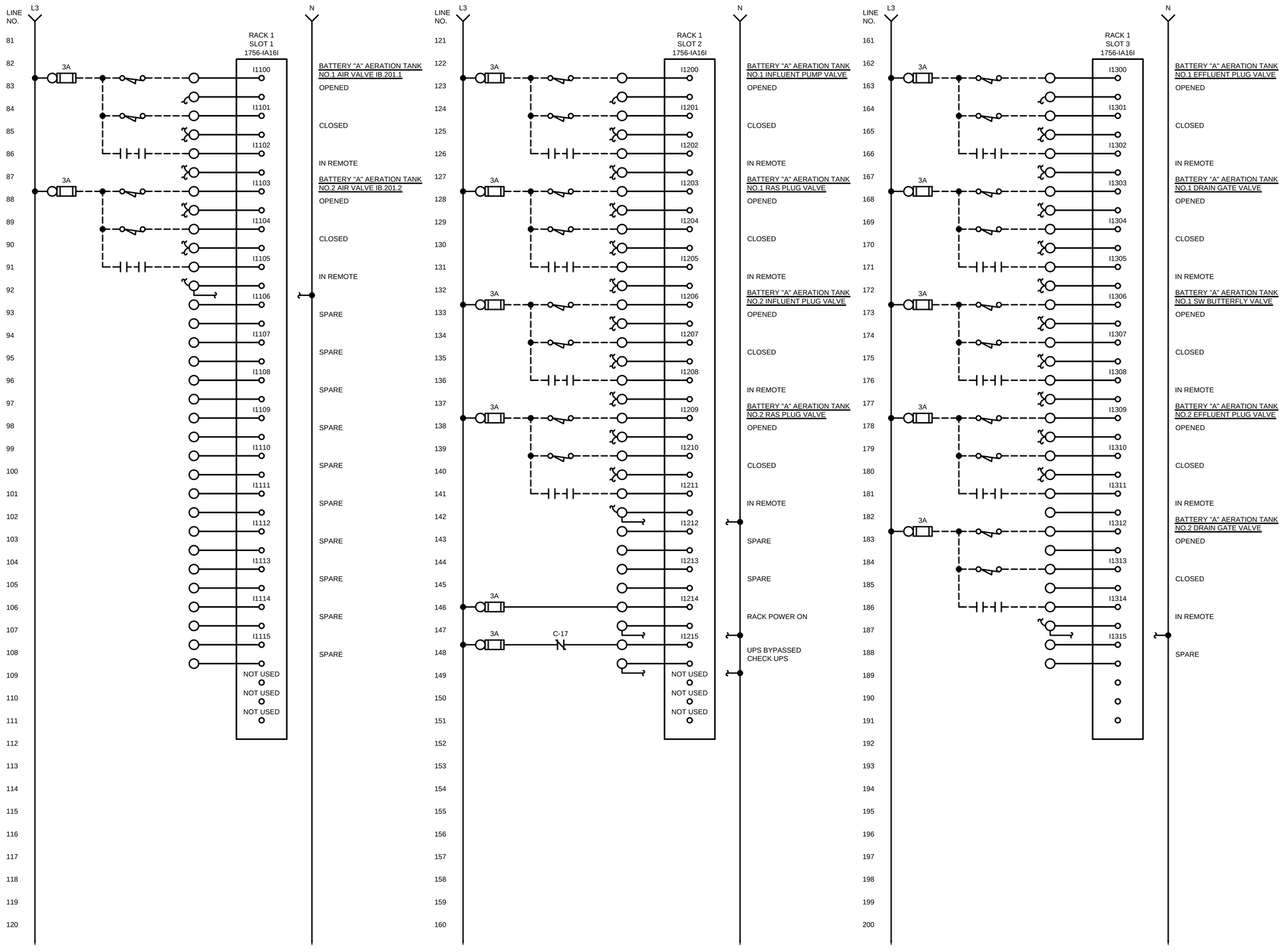

TETRA TECH
www.tetratech.com
401 SOUTH WASHINGTON SQUARE, SUITE 100
LANSING, MI, 48933
PHONE: 517.316.3930, FAX: 517.484.8140

MARK	DATE	DESCRIPTION	BY
	5/29/20	ISSUED FOR BIDS	

CITY OF FLINT, MICHIGAN

FLINT WPC AERATION SYSTEM IMPROVEMENTS

INSTRUMENTATION BLOWER I/O PANEL NO.1 RACK 1 WIRING DIAGRAM

PROJ:	200-156238-19001
DESN:	GCJ
DRWN:	JLS
CHKD:	MSJ/WAP

I-308

Copyright: Tetra Tech

Bar Measures 1 inch, otherwise drawing not to scale

5/27/2020 12:22:19 AM - \\TTS073FS1\PROJECTS\IER\156238\200-156238-19001\CAD\SHEETFILES\EI-308_BLOWER 1 WIR DIA.DWG - SHANK, JASON

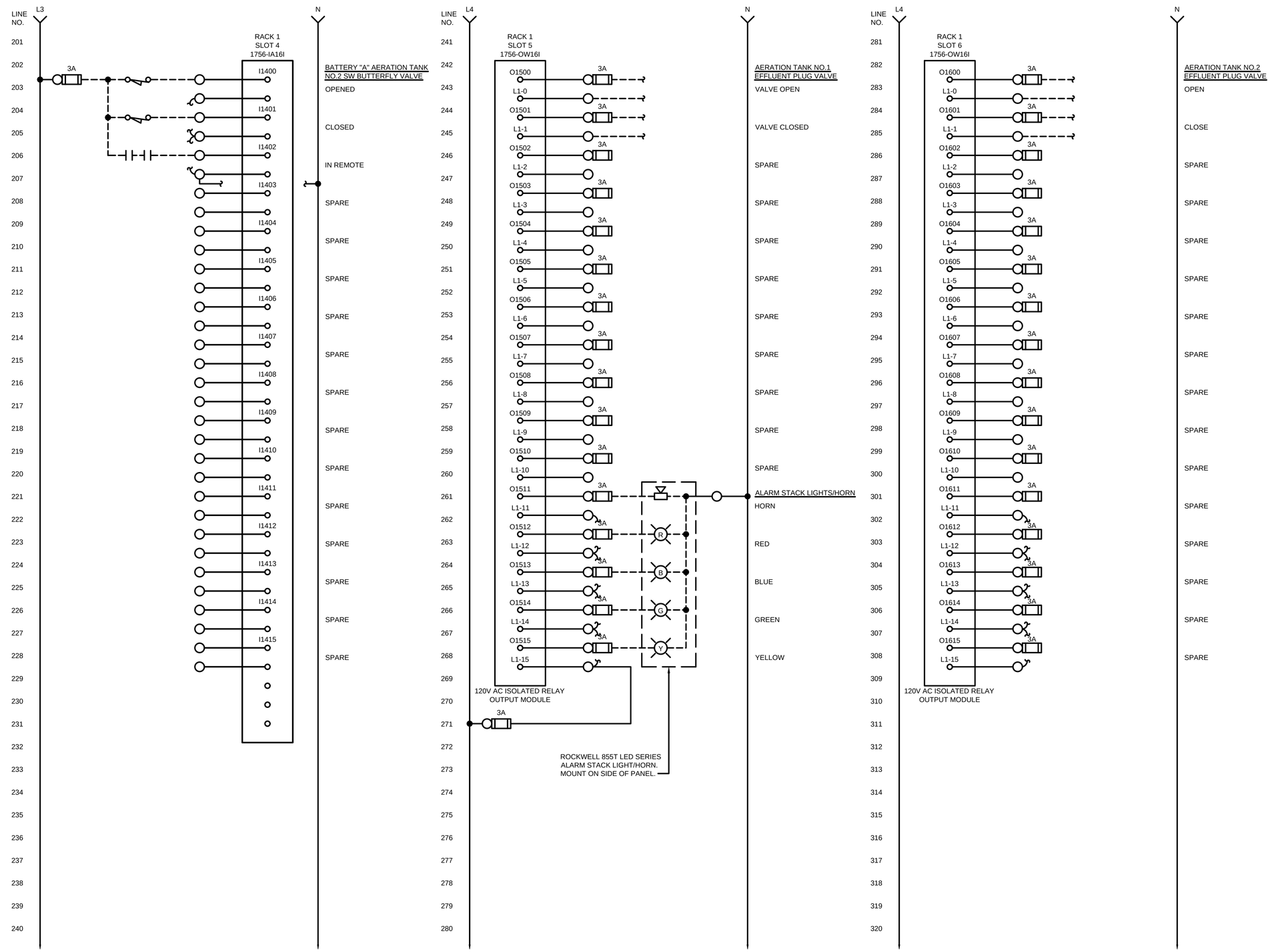

TETRA TECH
www.tetratech.com
401 SOUTH WASHINGTON SQUARE, SUITE 100
LANSING, MI. 48933
PHONE: 517.316.3930, FAX: 517.484.8140

MARK	DATE	DESCRIPTION	BY
	5/29/20	ISSUED FOR BIDS	

CITY OF FLINT, MICHIGAN

FLINT WPC AERATION SYSTEM IMPROVEMENTS

INSTRUMENTATION BLOWER I/O PANEL NO.1 RACK 1 WIRING DIAGRAM

PROJ:	200-156238-19001
DESN:	GCJ
DRWN:	JLS
CHKD:	MSJ/WAP

I-309

Copyright: Tetra Tech

Bar Measures 1 inch, otherwise drawing not to scale

5/25/2020 5:37:10 PM - \\TTS073FS1\PROJECTS\IER\156238\200-156238-19001\CAD\SHEETFILES\EI-309_BLOWER 1 WIR DIA_II.DWG - SHANK, JASON

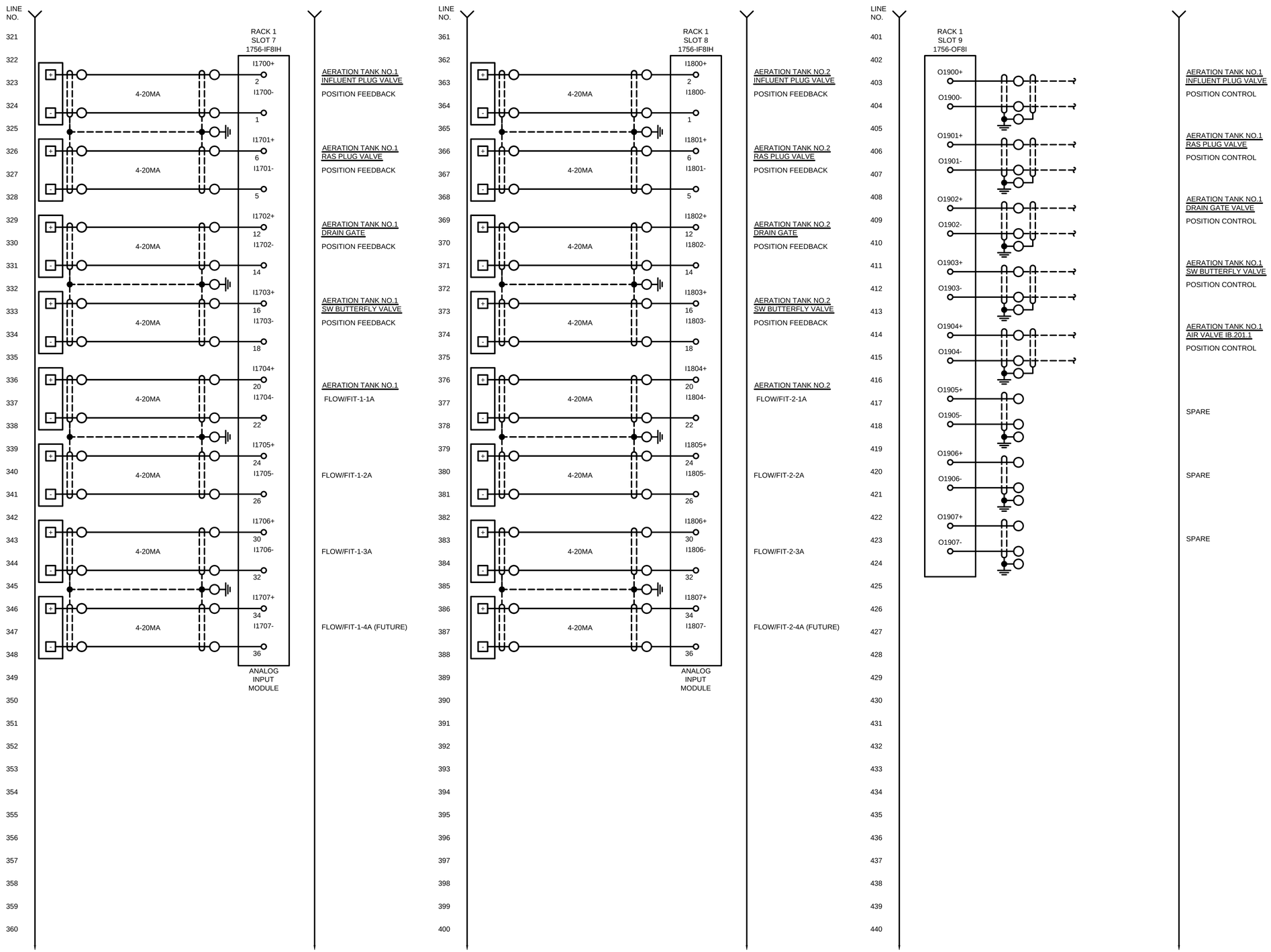

TETRA TECH
www.tetratech.com
401 SOUTH WASHINGTON SQUARE, SUITE 100
LANSING, MI. 48933
PHONE: 517.316.3930, FAX: 517.484.8140

MARK	DATE	DESCRIPTION	BY
	5/29/20	ISSUED FOR BIDS	

CITY OF FLINT, MICHIGAN
FLINT WPC AERATION SYSTEM IMPROVEMENTS
INSTRUMENTATION
BLOWER I/O PANEL NO.1
RACK 1 WIRING DIAGRAM

PROJ:	200-156238-19001
DESN:	GCJ
DRWN:	JLS
CHKD:	MSJ/WAP

I-310

Copyright: Tetra Tech

Bar Measures 1 inch, otherwise drawing not to scale

5/27/2020 12:27:10 AM - \\TTS073FS1□ROJECTS\IER\156238\200-156238-19001\CAD\SHEETFILES\EI\-310_BLOWER 1 WIR DIA_III.DWG - SHANK, JASON

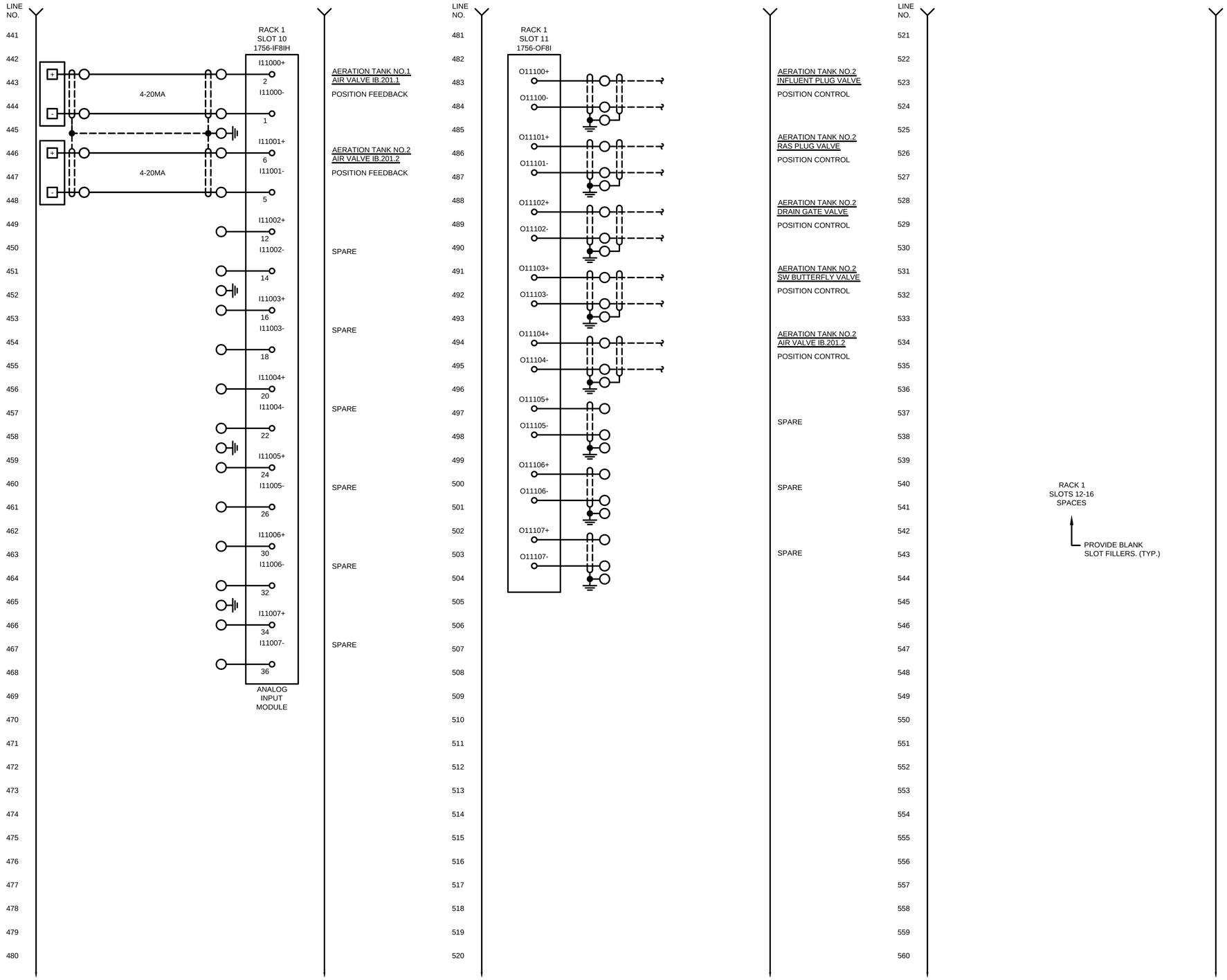

TETRA TECH
www.tetratech.com
401 SOUTH WASHINGTON SQUARE, SUITE 100
LANSING, MI, 48933
PHONE: 517.316.3930, FAX: 517.484.8140

MARK	DATE	DESCRIPTION	BY
	5/29/20	ISSUED FOR BIDS	

CITY OF FLINT, MICHIGAN
FLINT WPC AERATION SYSTEM IMPROVEMENTS
INSTRUMENTATION
BLOWER I/O PANEL NO.1
RACK 1 WIRING DIAGRAM

PROJ:	200-156238-19001
DESN:	GCJ
DRWN:	JLS
CHKD:	MSJ/WAP

I-311

Copyright: Tetra Tech

Bar Measures 1 inch, otherwise drawing not to scale

5/27/2020 12:33:58 AM - \\TTSO73FS1\PROJECTS\IER\156238\200-156238-19001\CAD\SHEETFILES\EI\-311_BLOWER 1 WIR DIA_IV.DWG - SHANK, JASON

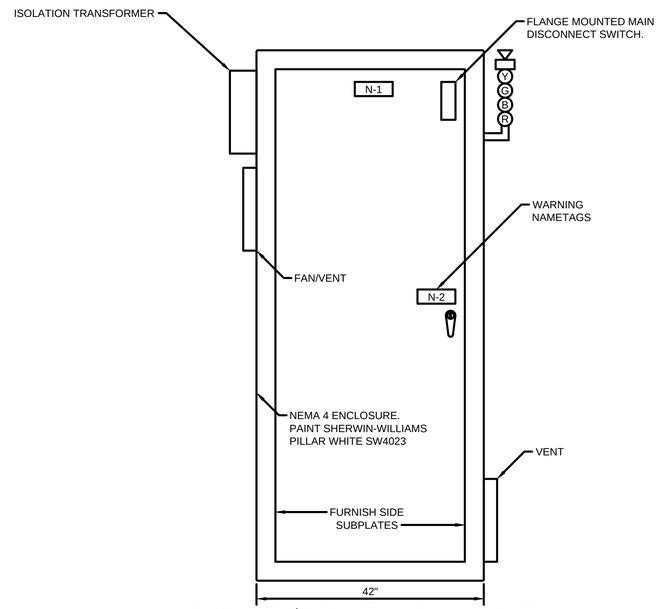

BLOWER I/O PANEL NO.2 LAYOUT

NEMA 4 ENCLOSURE
SIZE: - 60"H X 42"W X 24"D - MINIMUM

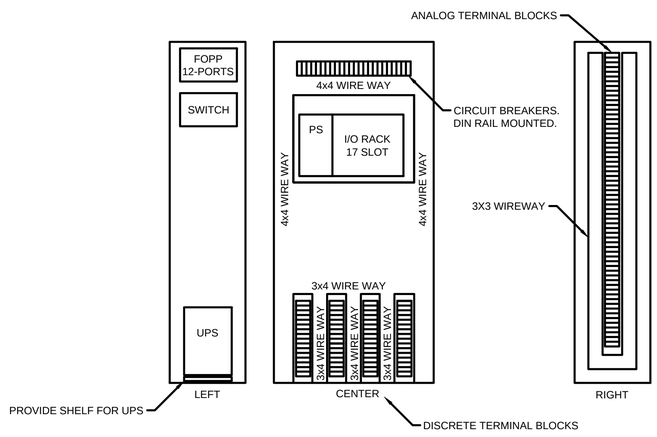

SUBPLATE LAYOUT

NOTE: NOT ALL SUBPLATE DEVICES ARE SHOWN.
NO SCALE

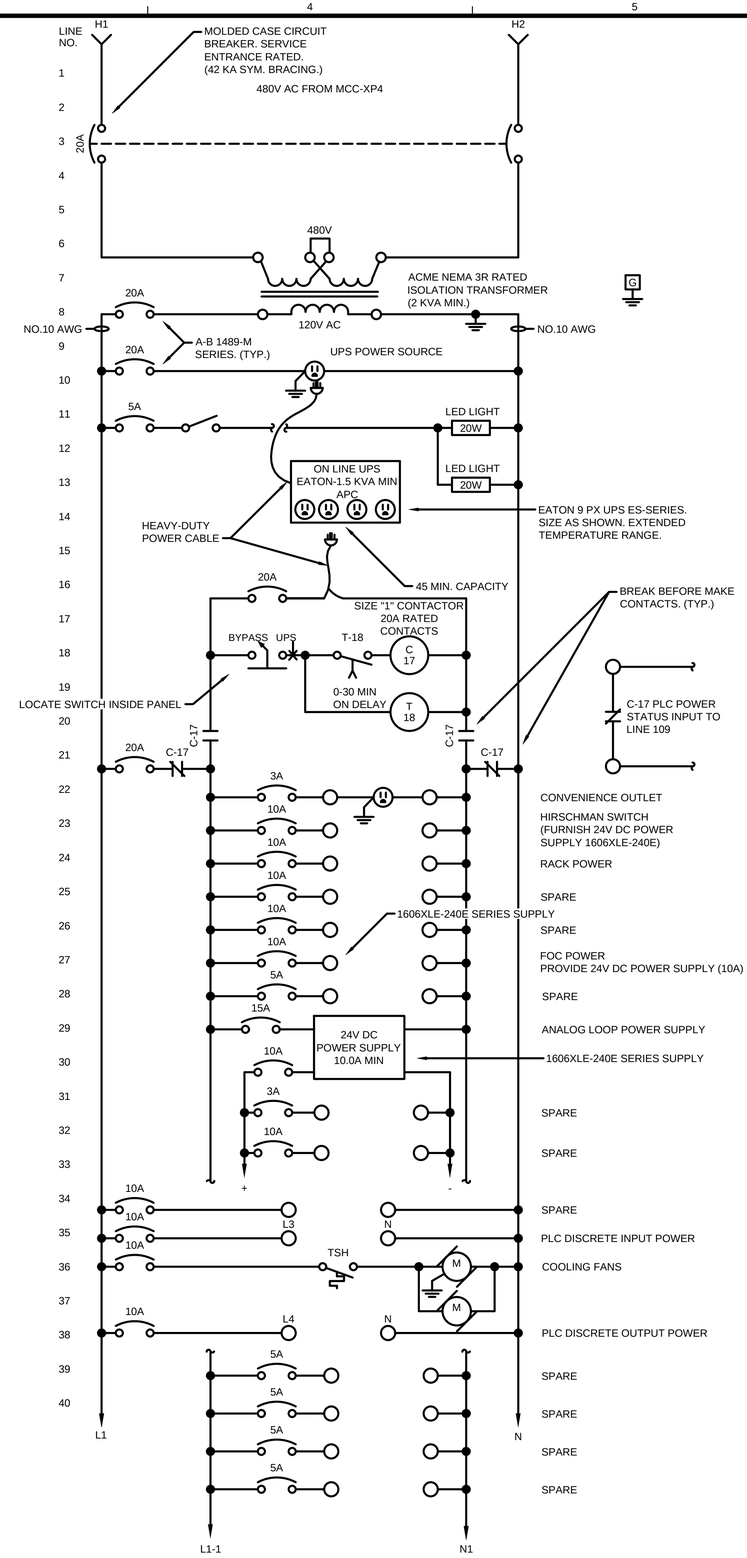

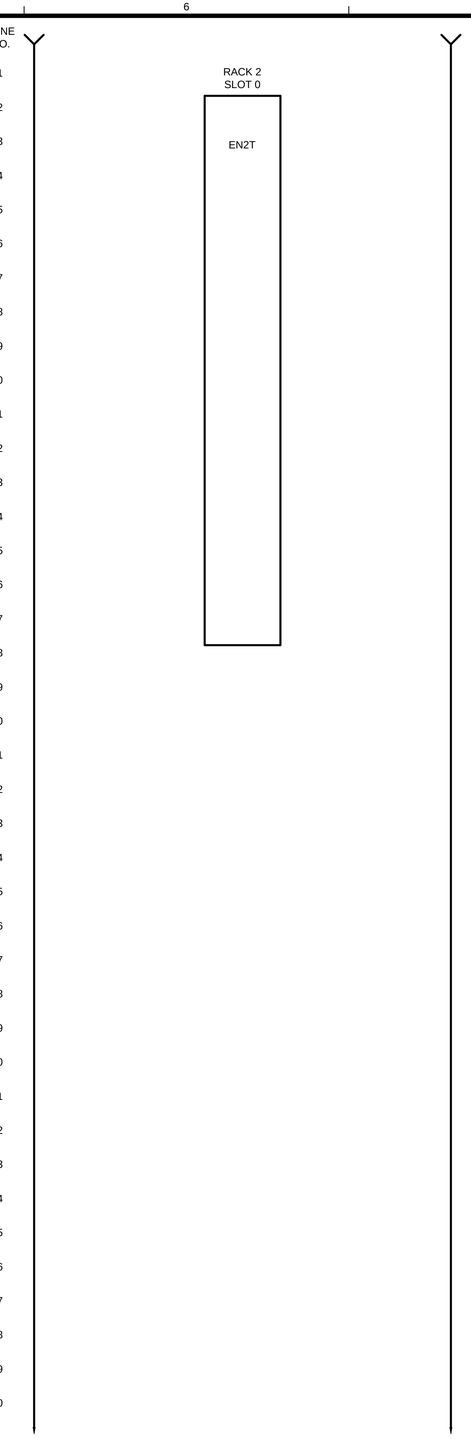

TETRA TECH
www.tetratech.com
401 SOUTH WASHINGTON SQUARE, SUITE 100
LANSING, MI. 48933
PHONE: 517.316.3930, FAX: 517.484.8140

MARK	DATE	DESCRIPTION	BY
	5/29/20	ISSUED FOR BIDS	

CITY OF FLINT, MICHIGAN
FLINT WPC AERATION SYSTEM IMPROVEMENTS
INSTRUMENTATION
BLOWER I/O PANEL NO.2
RACK 2 WIRING DIAGRAM

PROJ:	200-156238-19001
DESN:	GCJ
DRWN:	JLS
CHKD:	MSJ/WAP

I-312

Copyright: Tetra Tech

Bar Measures 1 inch, otherwise drawing not to scale

5/27/2020 11:06:15 AM - \\TTS073FS1\PROJECTS\IER\156238\200-156238-19001\CAD\SHEETFILES\EI\-312_BLWR PNL 2 LAYOUT_WIR DIA.DWG - SHANK, JASON

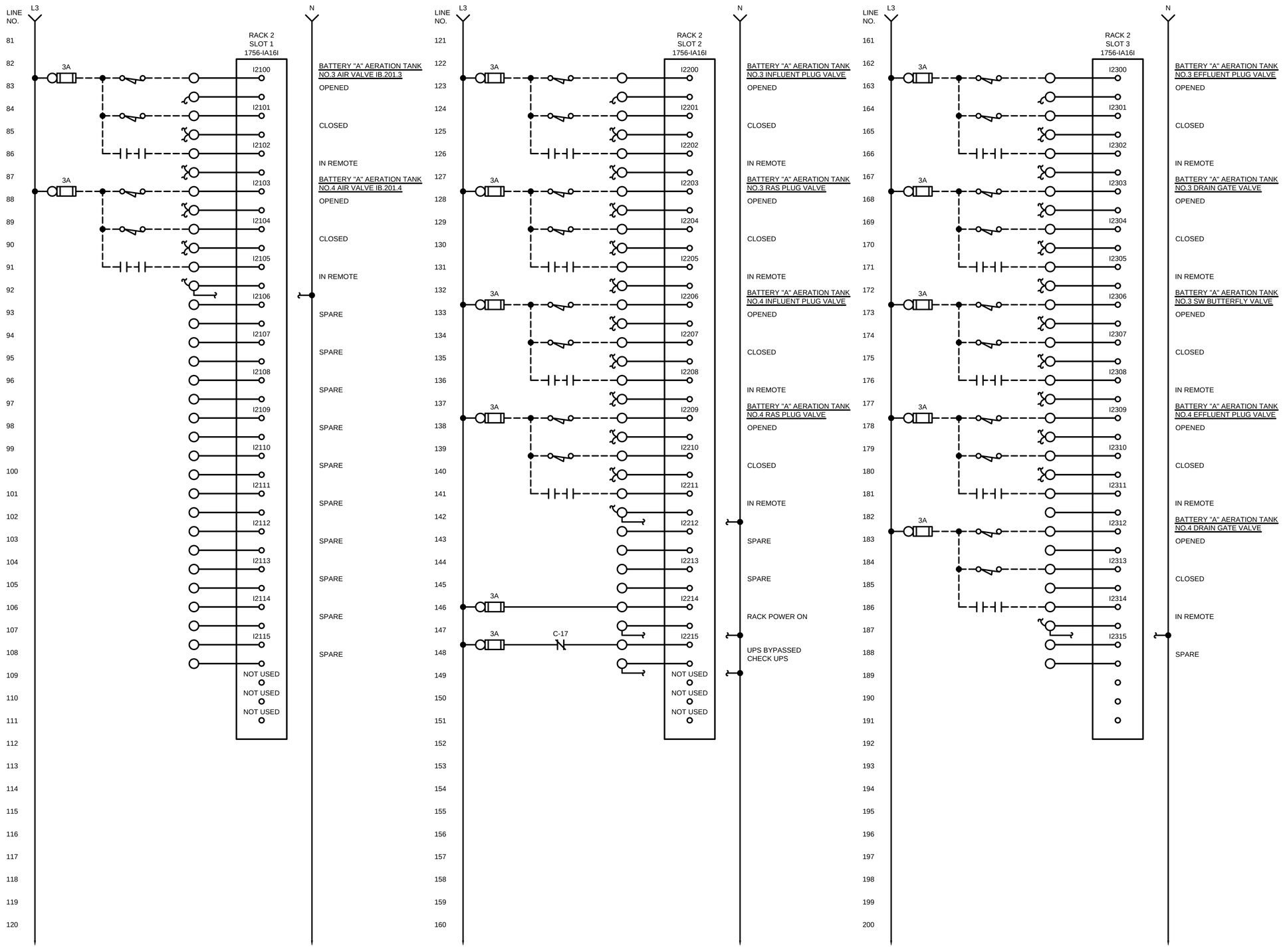

TETRA TECH
www.tetratech.com
401 SOUTH WASHINGTON SQUARE, SUITE 100
LANSING, MI, 48933
PHONE: 517.316.3930, FAX: 517.484.8140

MARK	DATE	DESCRIPTION	BY
	5/29/20	ISSUED FOR BIDS	

CITY OF FLINT, MICHIGAN

FLINT WPC AERATION SYSTEM IMPROVEMENTS

INSTRUMENTATION BLOWER I/O PANEL NO.2 RACK 2 WIRING DIAGRAM

PROJ:	200-156238-19001
DESN:	GCJ
DRWN:	JLS
CHKD:	MSJ/WAP

I-313

Copyright: Tetra Tech

Bar Measures 1 inch, otherwise drawing not to scale

5/27/2020 12:38:45 AM - \\TTS073FS1\PROJECTS\IER\156238\200-156238-19001\CAD\SHEETFILES\EI-313_BLOWER 2 WIR DIA.DWG - SHANK, JASON

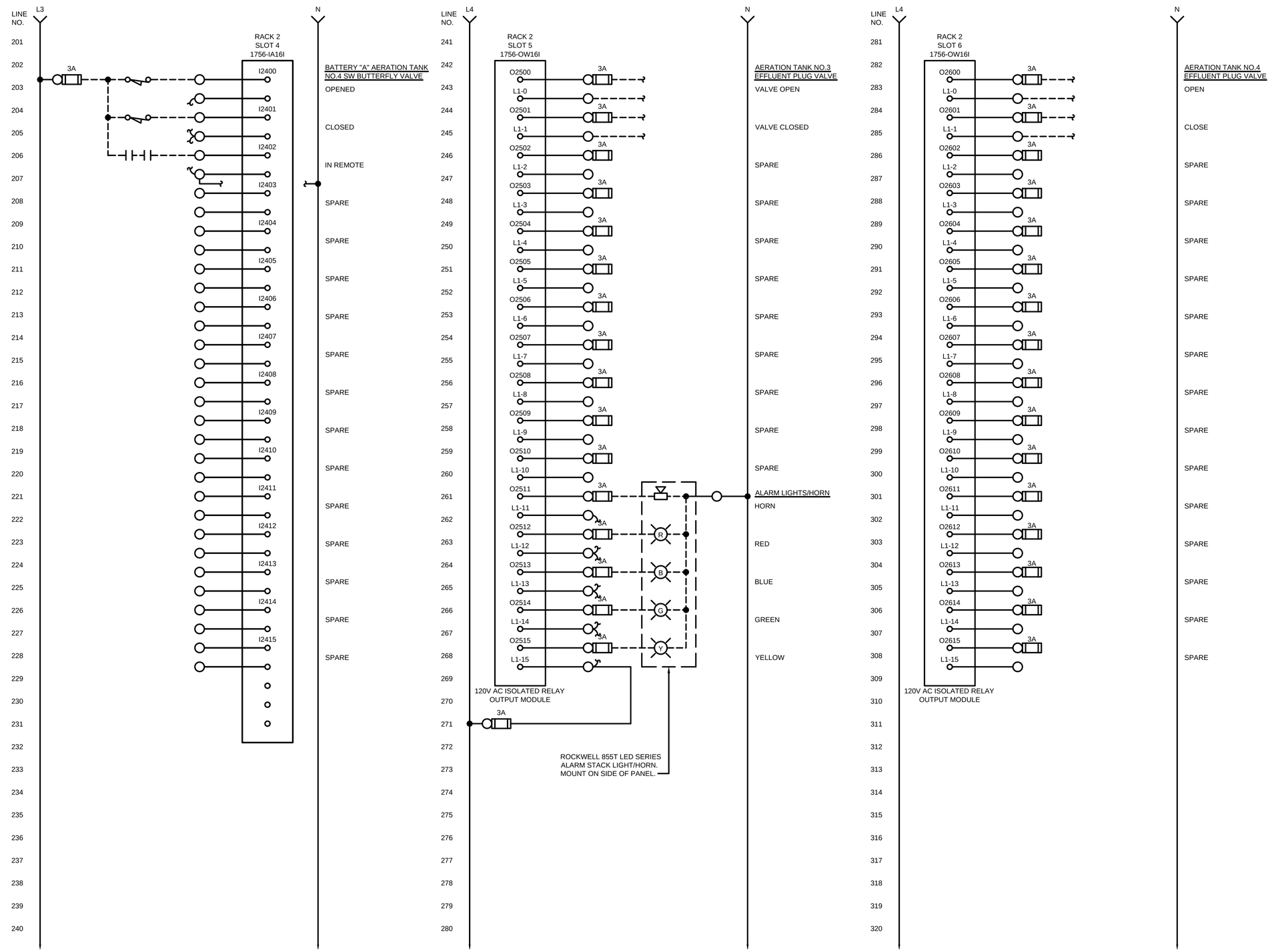

TETRA TECH
www.tetratech.com
401 SOUTH WASHINGTON SQUARE, SUITE 100
LANSING, MI, 48933
PHONE: 517.316.3930, FAX: 517.484.8140

MARK	DATE	DESCRIPTION	BY
	5/29/20	ISSUED FOR BIDS	

CITY OF FLINT, MICHIGAN

FLINT WPC AERATION SYSTEM IMPROVEMENTS

INSTRUMENTATION BLOWER I/O PANEL NO.2 RACK 2 WIRING DIAGRAM

PROJ:	200-156238-19001
DESN:	GCJ
DRWN:	JLS
CHKD:	MSJ/WAP

I-314

Copyright: Tetra Tech

Bar Measures 1 inch, otherwise drawing not to scale

5/26/2020 10:10:54 AM - \\TTS073FS1\PROJECTS\ER\156238\200-156238-19001\CAD\SHEETFILES\EI-314_BLOWER 2 WIR DIA_II.DWG - SHANK, JASON

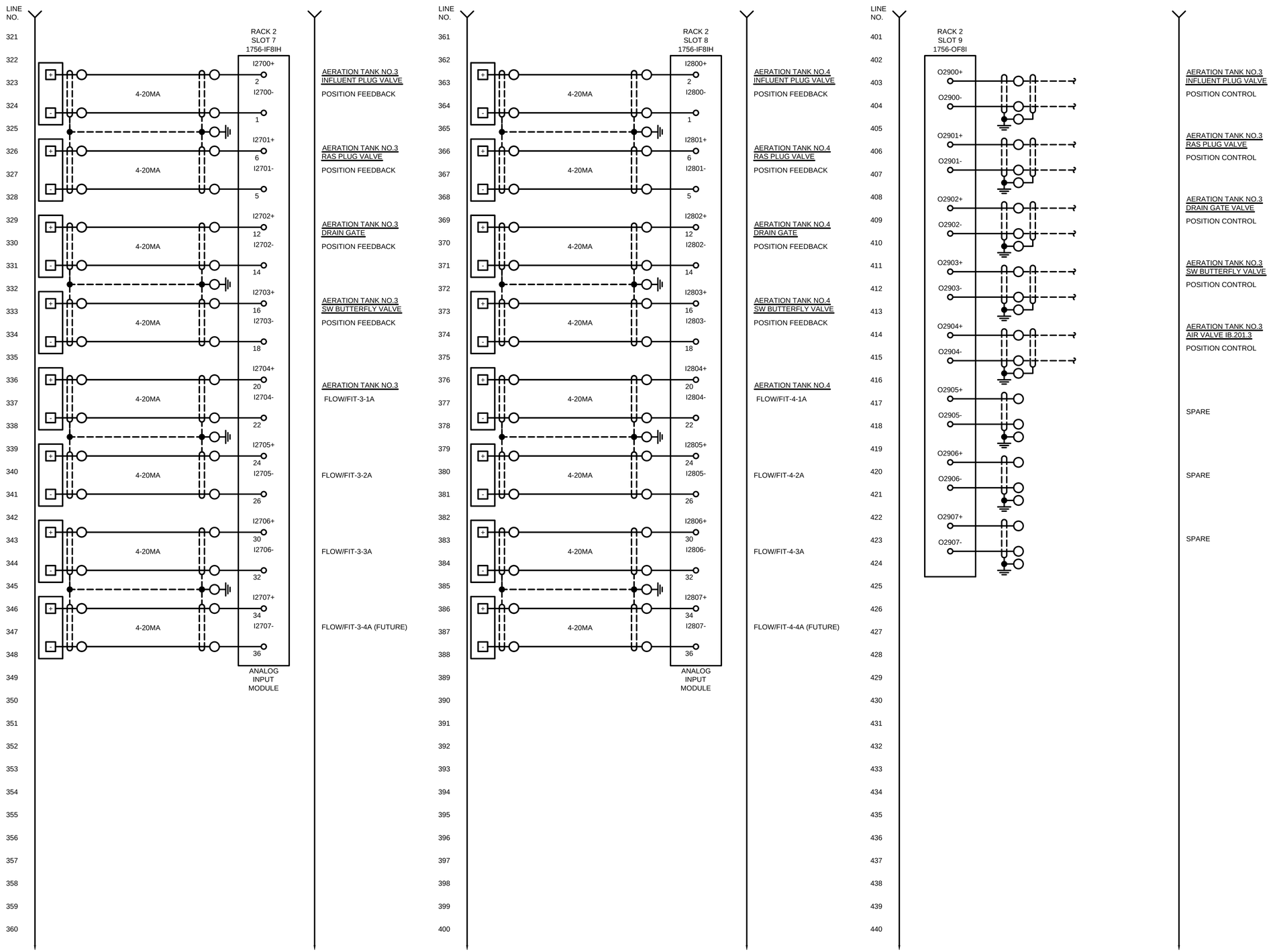

TETRA TECH
www.tetratech.com
401 SOUTH WASHINGTON SQUARE, SUITE 100
LANSING, MI. 48933
PHONE: 517.316.3930, FAX: 517.484.8140

MARK	DATE	DESCRIPTION	BY
	5/29/20	ISSUED FOR BIDS	

CITY OF FLINT, MICHIGAN
FLINT WPC AERATION SYSTEM IMPROVEMENTS
INSTRUMENTATION
BLOWER I/O PANEL NO.2
RACK 2 WIRING DIAGRAM

PROJ:	200-156238-19001
DESN:	GCJ
DRWN:	JLS
CHKD:	MSJ/WAP

I-315

Copyright: Tetra Tech

Bar Measures 1 inch, otherwise drawing not to scale

5/27/2020 12:41:04 AM - \\TTS073FS1□ROJECTS\IER\156238\200-156238-19001\CAD\SHEETFILES\EI\-315_BLOWER 2 WIR DIA_III.DWG - SHANK, JASON

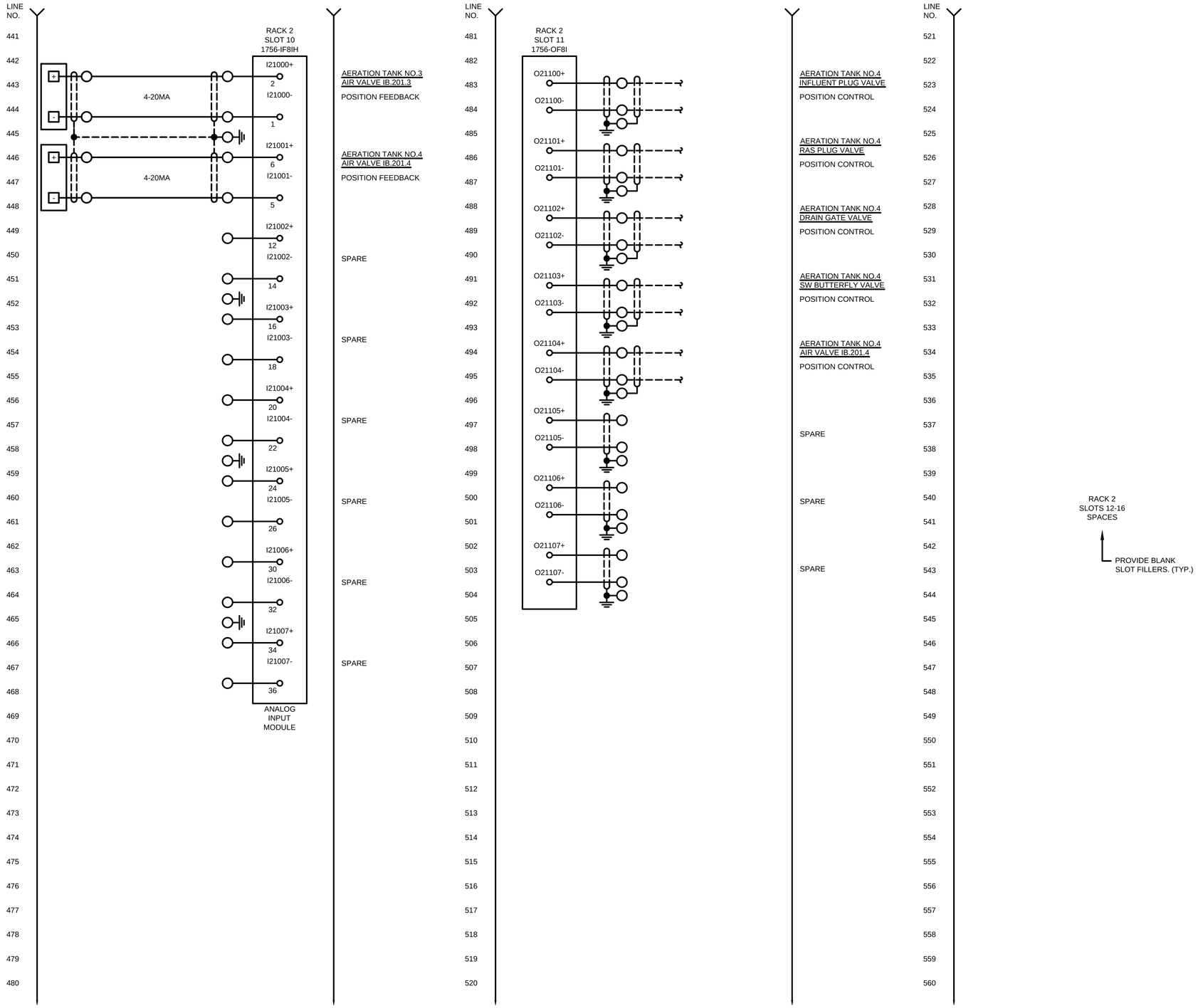

TETRA TECH
www.tetratech.com
401 SOUTH WASHINGTON SQUARE, SUITE 100
LANSING, MI. 48933
PHONE: 517.316.3930, FAX: 517.484.8140

MARK	DATE	DESCRIPTION	BY
	5/29/20	ISSUED FOR BIDS	

CITY OF FLINT, MICHIGAN
FLINT WPC AERATION SYSTEM IMPROVEMENTS
INSTRUMENTATION
BLOWER I/O PANEL NO.2
RACK 2 WIRING DIAGRAM

PROJ:	200-156238-19001
DESN:	GCJ
DRWN:	JLS
CHKD:	MSJ/WAP

I-316

Copyright: Tetra Tech

Bar Measures 1 inch, otherwise drawing not to scale

5/27/2020 12:44:21 AM - \\TTSO73FS1\PROJECTS\IER\156238\200-156238-19001\CAD\SHEETFILES\EI-316_BLOWER 2 WIR DIA_IV.DWG - SHANK, JASON

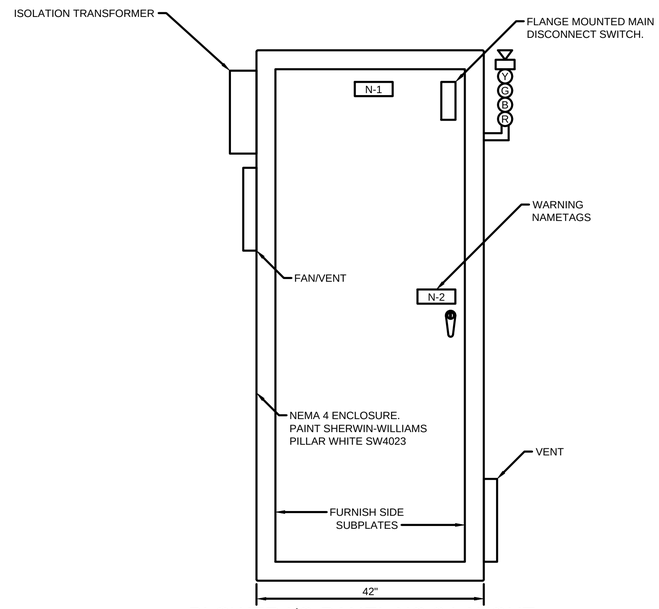

BLOWER I/O PANEL NO.3 LAYOUT

NEMA 4 ENCLOSURE
SIZE: - 60"H X 42"W X 24"D - MINIMUM

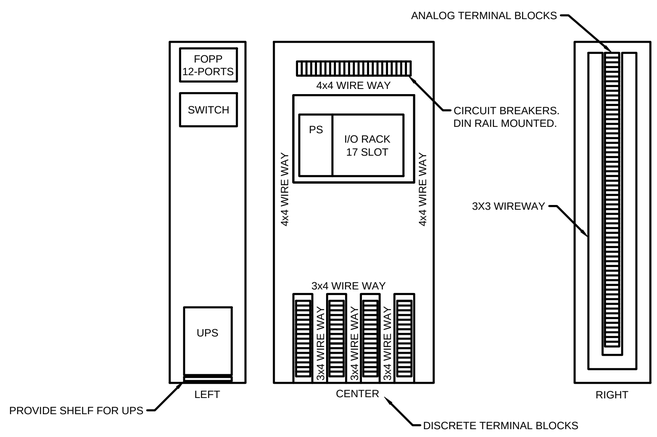

SUBPLATE LAYOUT

NOTE: NOT ALL SUBPLATE DEVICES ARE SHOWN.
NO SCALE

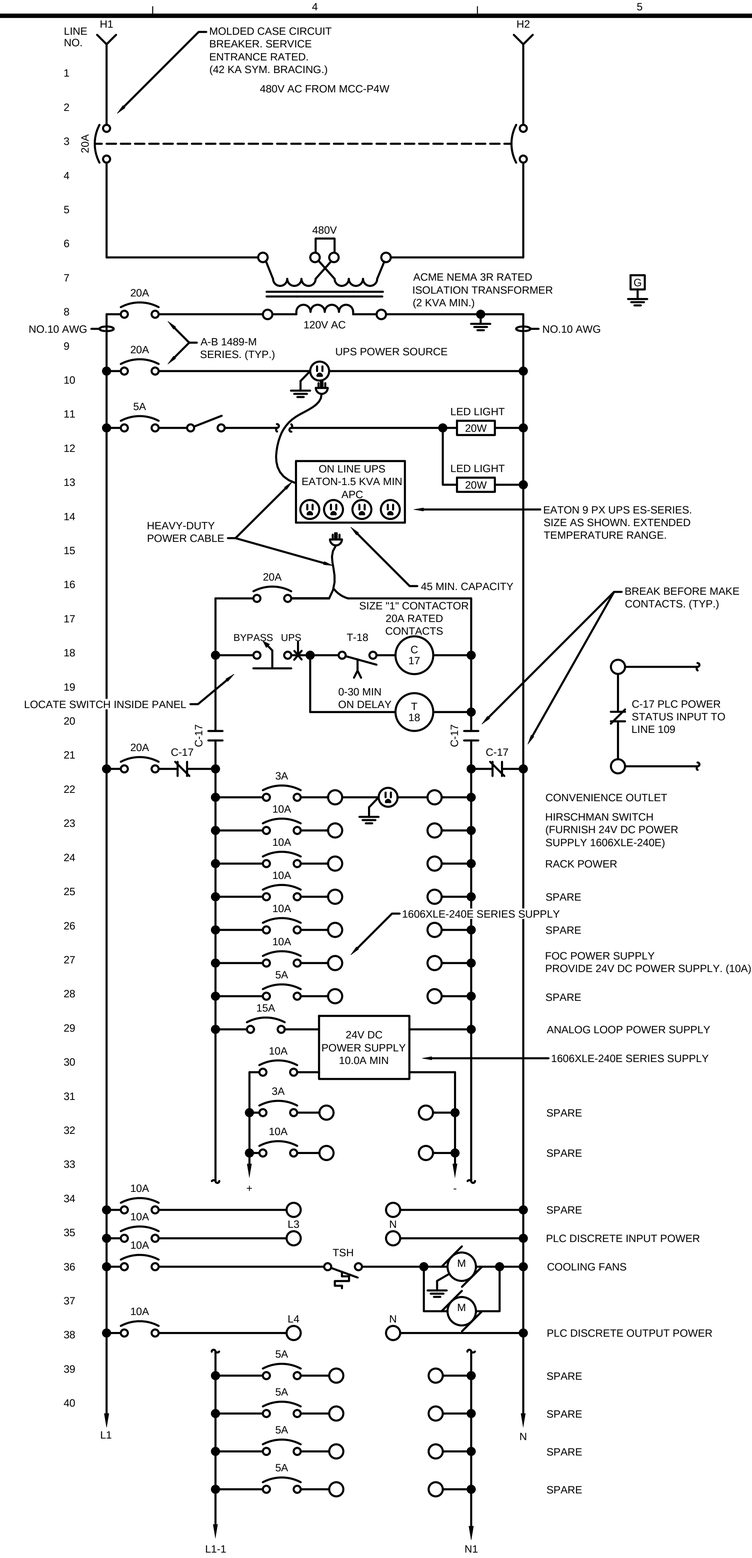

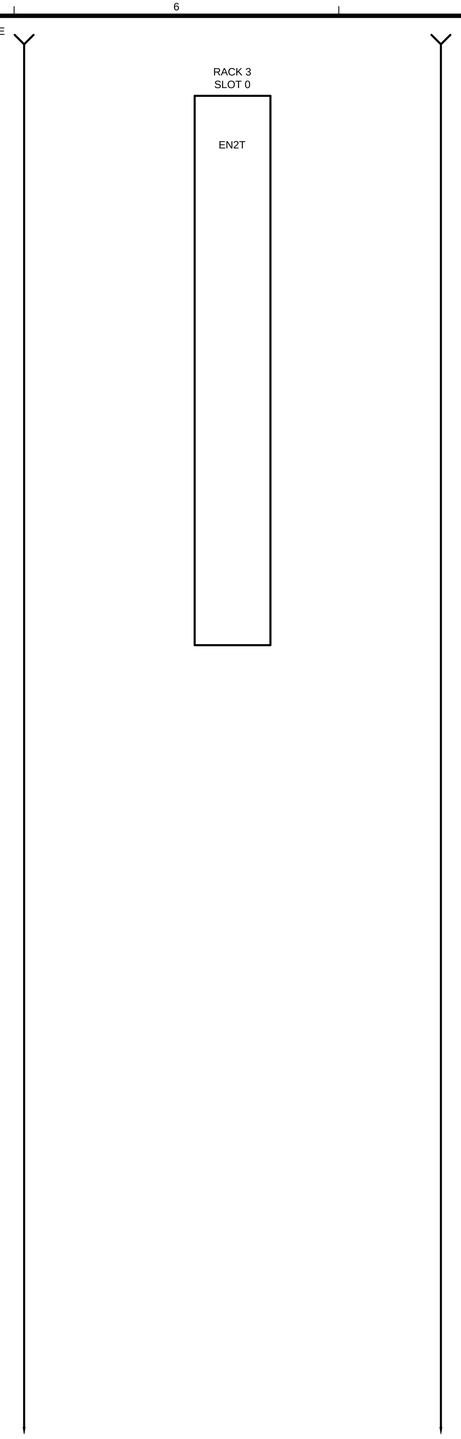

TETRA TECH
www.tetratech.com
401 SOUTH WASHINGTON SQUARE, SUITE 100
LANSING, MI. 48933
PHONE: 517.316.3930, FAX: 517.484.8140

MARK	DATE	DESCRIPTION	BY
	5/29/20	ISSUED FOR BIDS	

CITY OF FLINT, MICHIGAN
FLINT WPC AERATION SYSTEM IMPROVEMENTS
INSTRUMENTATION
BLOWER I/O PANEL NO.3
RACK 3 WIRING DIAGRAM

PROJ:	200-156238-19001
DESN:	GCJ
DRWN:	JLS
CHKD:	MSJ/WAP

I-317

Copyright: Tetra Tech

Bar Measures 1 inch, otherwise drawing not to scale

5/26/2020 10:27:20 AM - \\TTS073FS1...ROJECTS\IER\156238\200-156238-19001\CAD\SHEETFILES\EI\-317_BLWR PNL 3 LAYOUT_WIR DIA.DWG - SHANK, JASON

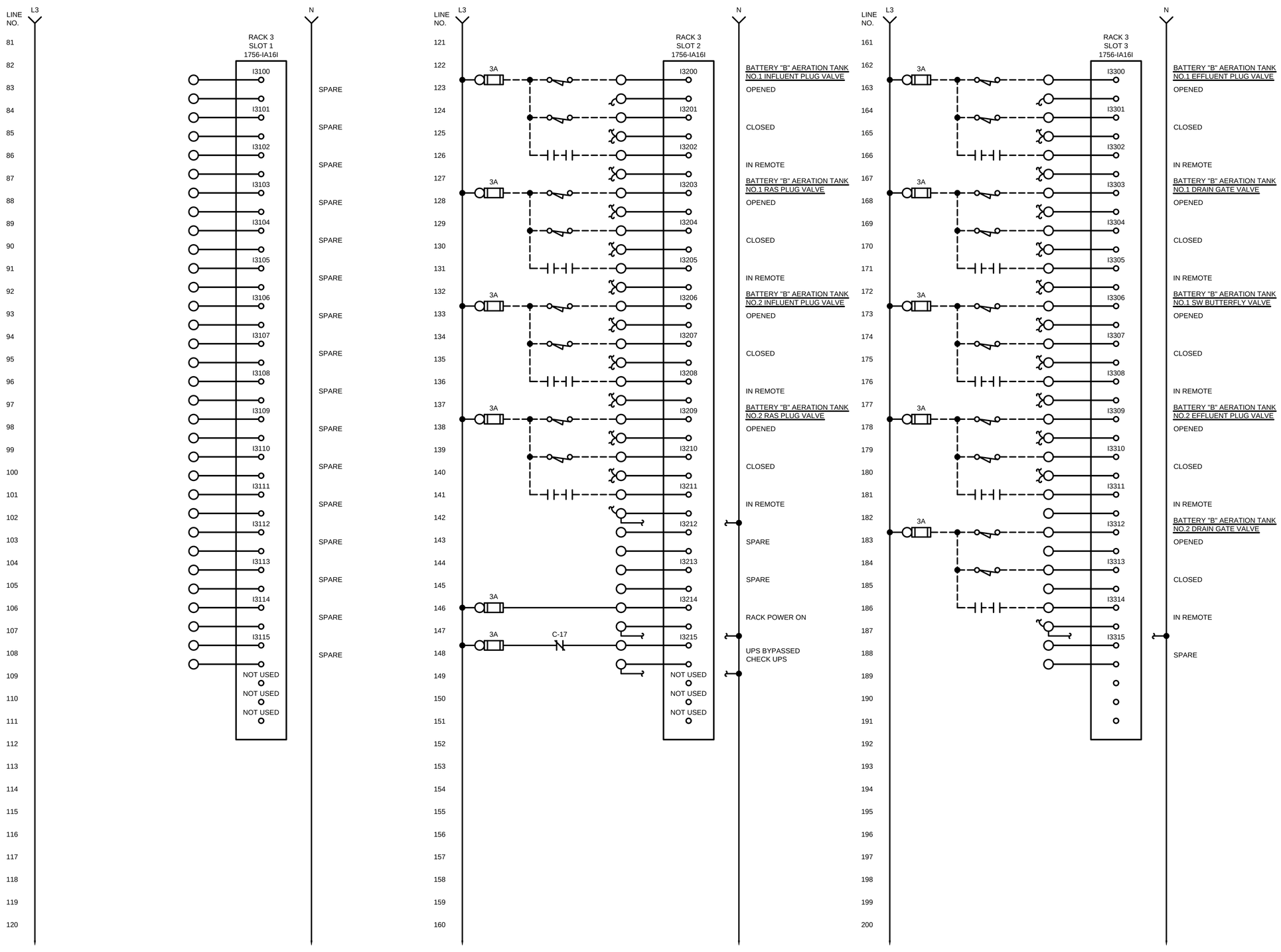

TETRA TECH
www.tetratech.com
401 SOUTH WASHINGTON SQUARE, SUITE 100
LANSING, MI, 48933
PHONE: 517.316.3930, FAX: 517.484.8140

MARK	DATE	DESCRIPTION	BY
	5/29/20	ISSUED FOR BIDS	

CITY OF FLINT, MICHIGAN

FLINT WPC AERATION SYSTEM IMPROVEMENTS

INSTRUMENTATION BLOWER I/O PANEL NO.3 RACK 3 WIRING DIAGRAM

PROJ:	200-156238-19001
DESN:	GCJ
DRWN:	JLS
CHKD:	MSJ/WAP

I-318

Copyright: Tetra Tech

Bar Measures 1 inch, otherwise drawing not to scale

5/26/2020 10:28:12 AM - \\TTS073FS1\PROJECTS\IER\156238\200-156238-19001\CAD\SHEETFILES\EI-318_BLOWER 3 WIR DIA.DWG - SHANK, JASON

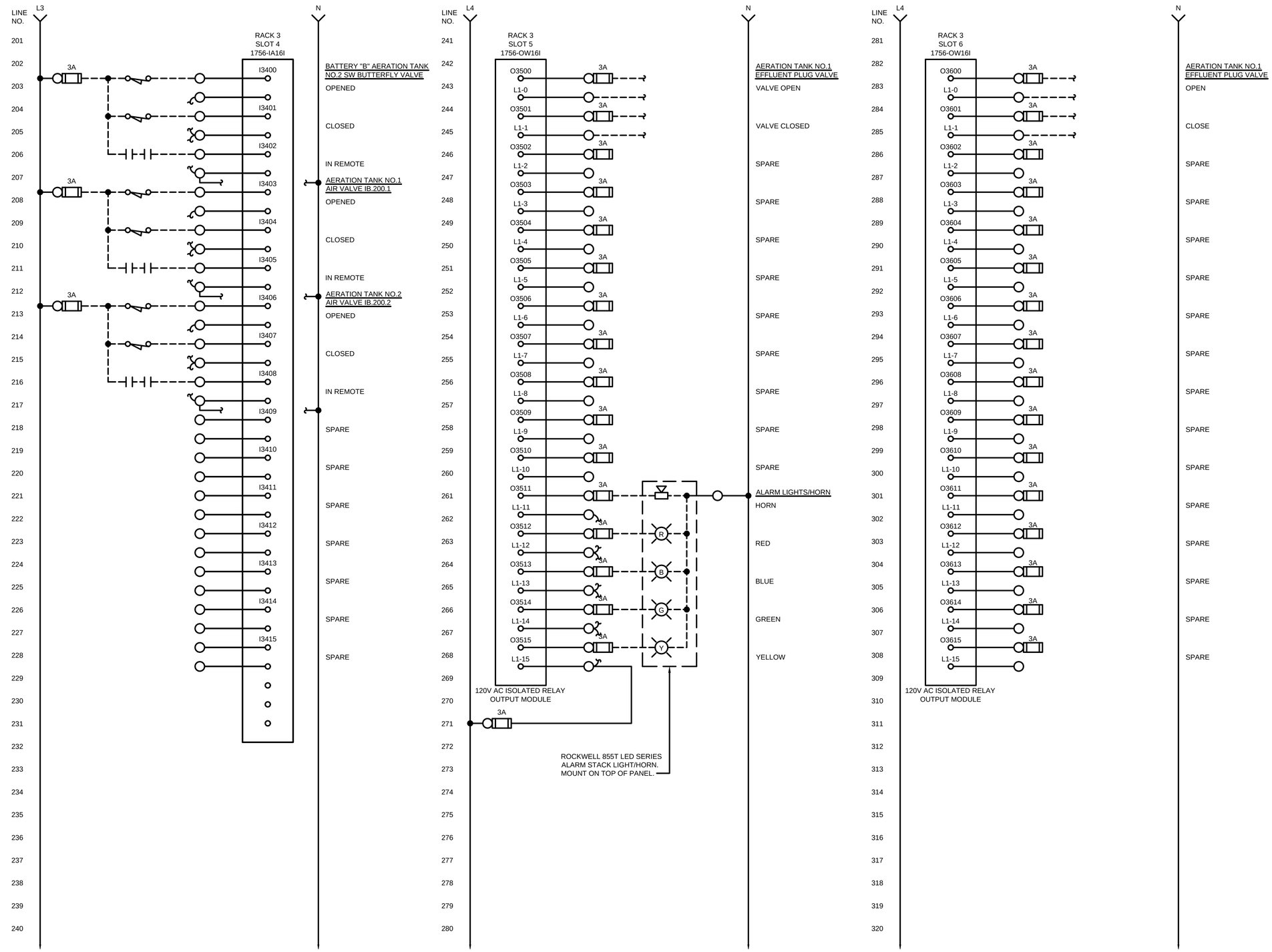

TETRA TECH

www.tetratech.com
401 SOUTH WASHINGTON SQUARE, SUITE 100
LANSING, MI. 48933
PHONE: 517.316.3930, FAX: 517.484.8140

MARK	DATE	DESCRIPTION	BY
	5/29/20	ISSUED FOR BIDS	

CITY OF FLINT, MICHIGAN

FLINT WPC AERATION SYSTEM IMPROVEMENTS

INSTRUMENTATION BLOWER I/O PANEL NO.3 RACK 3 WIRING DIAGRAM

PROJ:	200-156238-19001
DESN:	GCJ
DRWN:	JLS
CHKD:	MSJ/WAP

I-319

Copyright: Tetra Tech

Bar Measures 1 inch, otherwise drawing not to scale

5/26/2020 10:33:16 AM - \\TTS073FS1\PROJECTS\ER\156238\200-156238-19001\CAD\SHEETFILES\EI-319_BLOWER 3 WIR DIA_II.DWG - SHANK, JASON

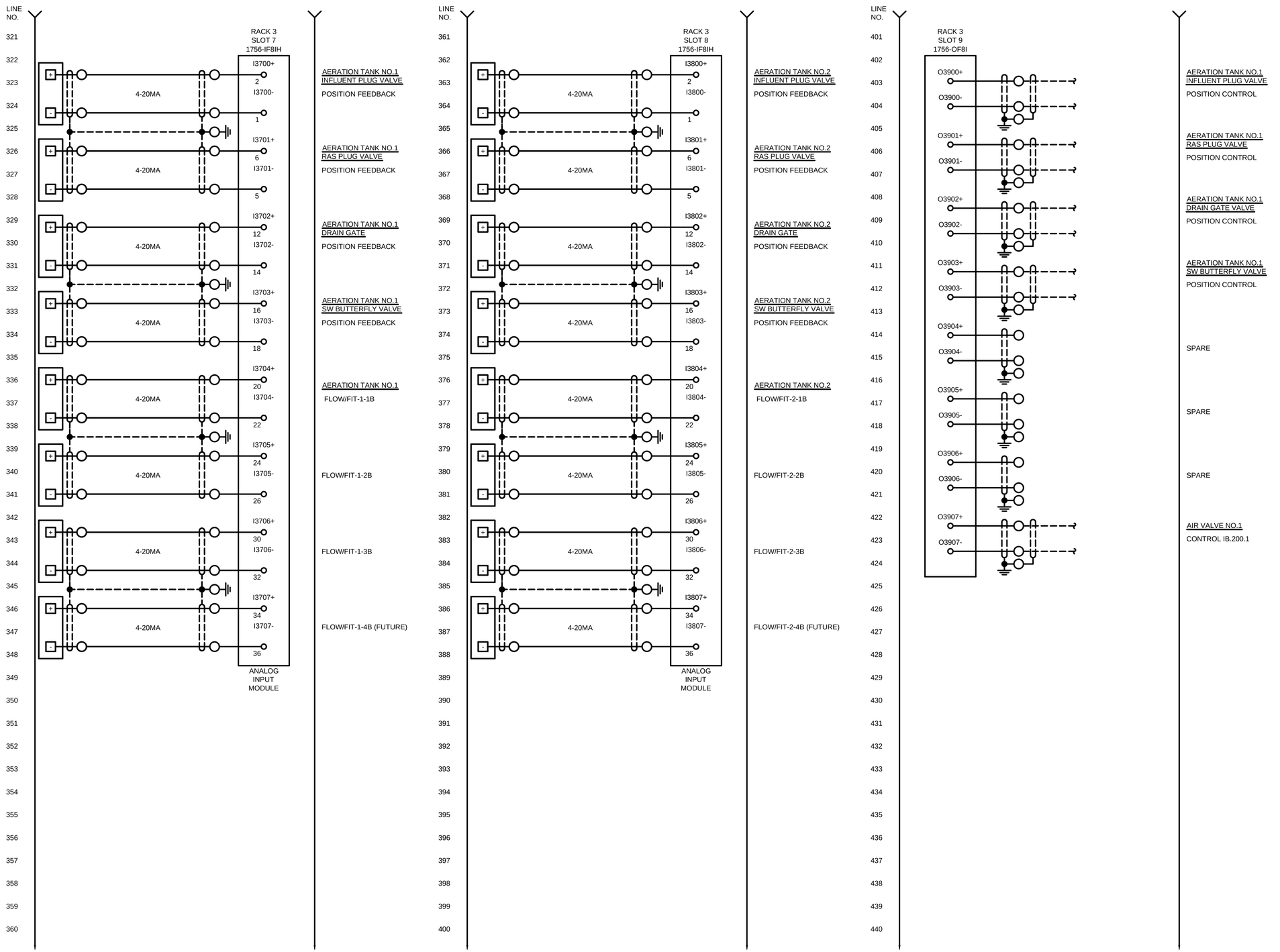

TETRA TECH
www.tetratech.com
401 SOUTH WASHINGTON SQUARE, SUITE 100
LANSING, MI. 48933
PHONE: 517.316.3930, FAX: 517.484.8140

MARK	DATE	DESCRIPTION	BY
	5/29/20	ISSUED FOR BIDS	

CITY OF FLINT, MICHIGAN
FLINT WPC AERATION SYSTEM IMPROVEMENTS
INSTRUMENTATION
BLOWER I/O PANEL NO.3
RACK 3 WIRING DIAGRAM

PROJ:	200-156238-19001
DESN:	GCJ
DRWN:	JLS
CHKD:	MSJ/WAP

I-320

Copyright: Tetra Tech

Bar Measures 1 inch, otherwise drawing not to scale

5/26/2020 10:41:31 AM - \\TTS073FS1□ROJECTS\IER\156238\200-156238-19001\CAD\SHEETFILES\EI-320_BLOWER 3 WIR DIA_III.DWG - SHANK, JASON

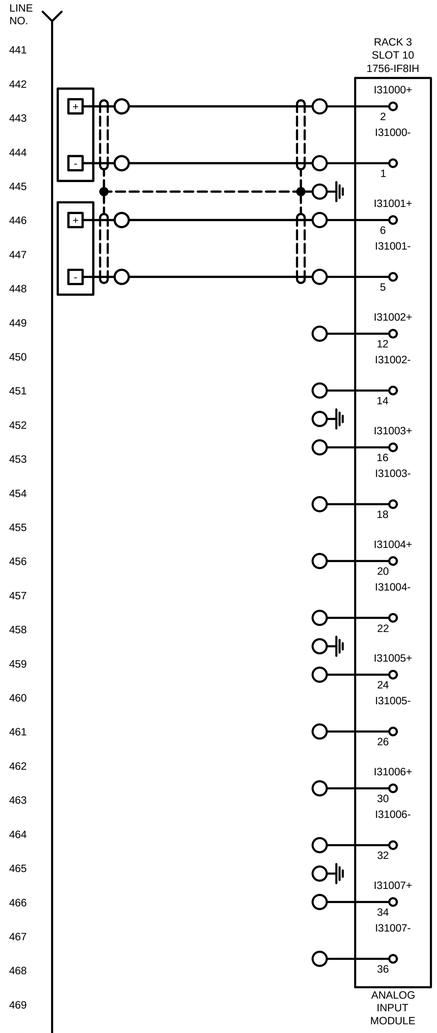

AERATION TANK NO.1
AIR VALVE IB.200.1
POSITION FEEDBACK

AERATION TANK NO.2
AIR VALVE IB.200.3
POSITION FEEDBACK

SPARE

SPARE

SPARE

SPARE

SPARE

SPARE

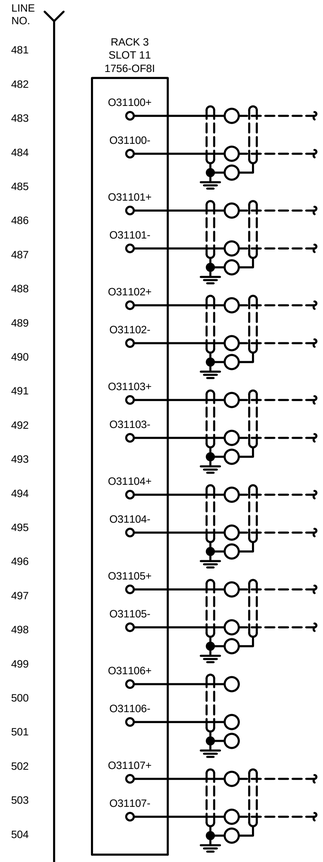

AERATION TANK NO.2
INFLUENT PLUG VALVE
POSITION CONTROL

AERATION TANK NO.2
RAS PLUG VALVE
POSITION CONTROL

AERATION TANK NO.2
DRAIN GATE VALVE
POSITION CONTROL

AERATION TANK NO.2
5W BUTTERFLY VALVE
POSITION CONTROL

AERATION TANK NO.2
AIR VALVE IB.200.2
POSITION CONTROL

AERATION TANK NO.2
AIR VALVE IB.200.3
POSITION CONTROL

SPARE

AERATION TANK NO.2
AIR VALVE IB.200.2
POSITION CONTROL

LINE NO.

RACK 3
SLOTS 12-16
SPACES

PROVIDE BLANK
SLOT FILLERS. (TYP.)

TETRA TECH
www.tetratech.com
401 SOUTH WASHINGTON SQUARE, SUITE 100
LANSING, MI, 48933
PHONE: 517.316.3930, FAX: 517.484.8140

MARK	DATE	DESCRIPTION	BY
	5/29/20	ISSUED FOR BIDS	

CITY OF FLINT, MICHIGAN
FLINT WPC AERATION
SYSTEM IMPROVEMENTS
INSTRUMENTATION
BLOWER I/O PANEL NO.3
RACK 3 WIRING DIAGRAM

PROJ: 200-156238-19001
DESN: GCJ
DRWN: JLS
CHKD: MSJ/WAP

I-321

Copyright: Tetra Tech

Bar Measures 1 inch, otherwise drawing not to scale

5/26/2020 11:02:10 AM - \\TTSO73FS1\PROJECTS\IER\156238\200-156238-19001\CAD\SHEETFILES\EI-321_BLOWER 3 WIR DIA_IV.DWG - SHANK, JASON

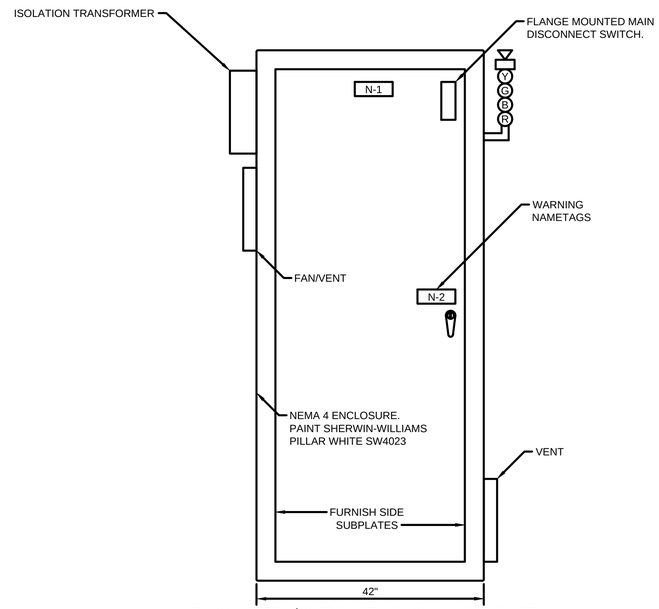

BLOWER I/O PANEL NO.4 LAYOUT

NEMA 4 ENCLOSURE
SIZE: - 60"H X 42"W X 24"D - MINIMUM

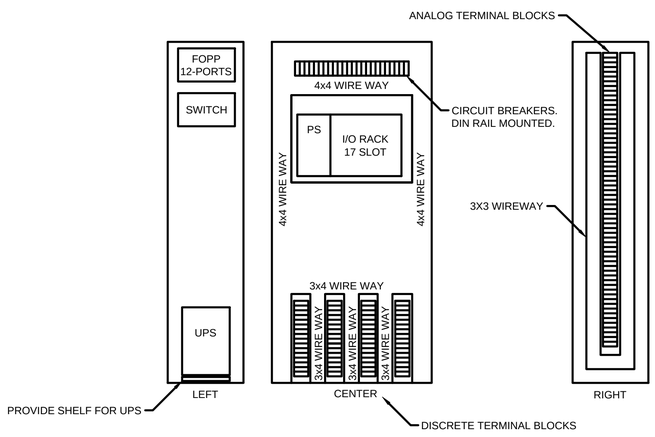

SUBPLATE LAYOUT

NOTE: NOT ALL SUBPLATE DEVICES ARE SHOWN.
NO SCALE

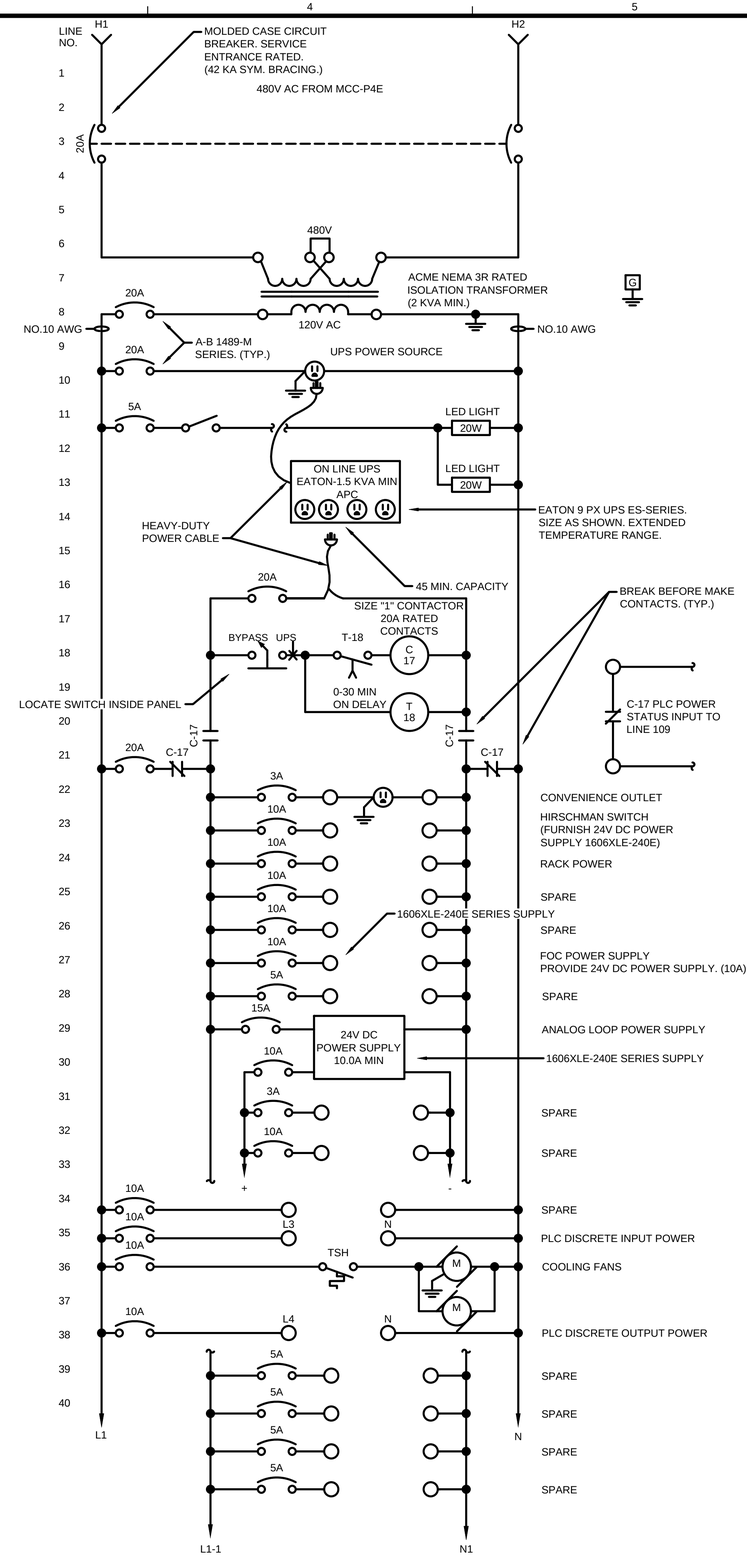

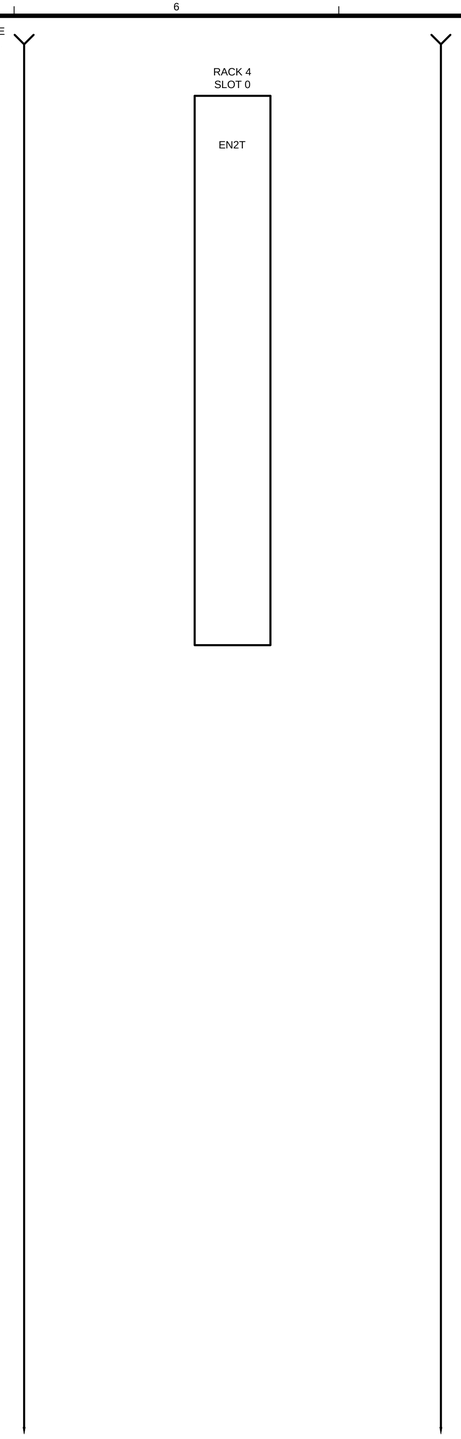

TETRA TECH
www.tetratech.com
401 SOUTH WASHINGTON SQUARE, SUITE 100
LANSING, MI. 48933
PHONE: 517.316.3930, FAX: 517.484.8140

MARK	DATE	DESCRIPTION	BY
	5/29/20	ISSUED FOR BIDS	

CITY OF FLINT, MICHIGAN
FLINT WPC AERATION SYSTEM IMPROVEMENTS
INSTRUMENTATION
BLOWER I/O PANEL NO.4
RACK 4 WIRING DIAGRAM

PROJ:	200-156238-19001
DESN:	GCJ
DRWN:	JLS
CHKD:	MSJ/WAP

I-322

Copyright: Tetra Tech

Bar Measures 1 inch, otherwise drawing not to scale

5/26/2020 11:07:26 AM - \\TTS073FS1...ROJECTS\IER\156238\200-156238-19001\CAD\SHEETFILES\EI\-322_BLWR PNL 4 LAYOUT_WIR DIA.DWG - SHANK, JASON

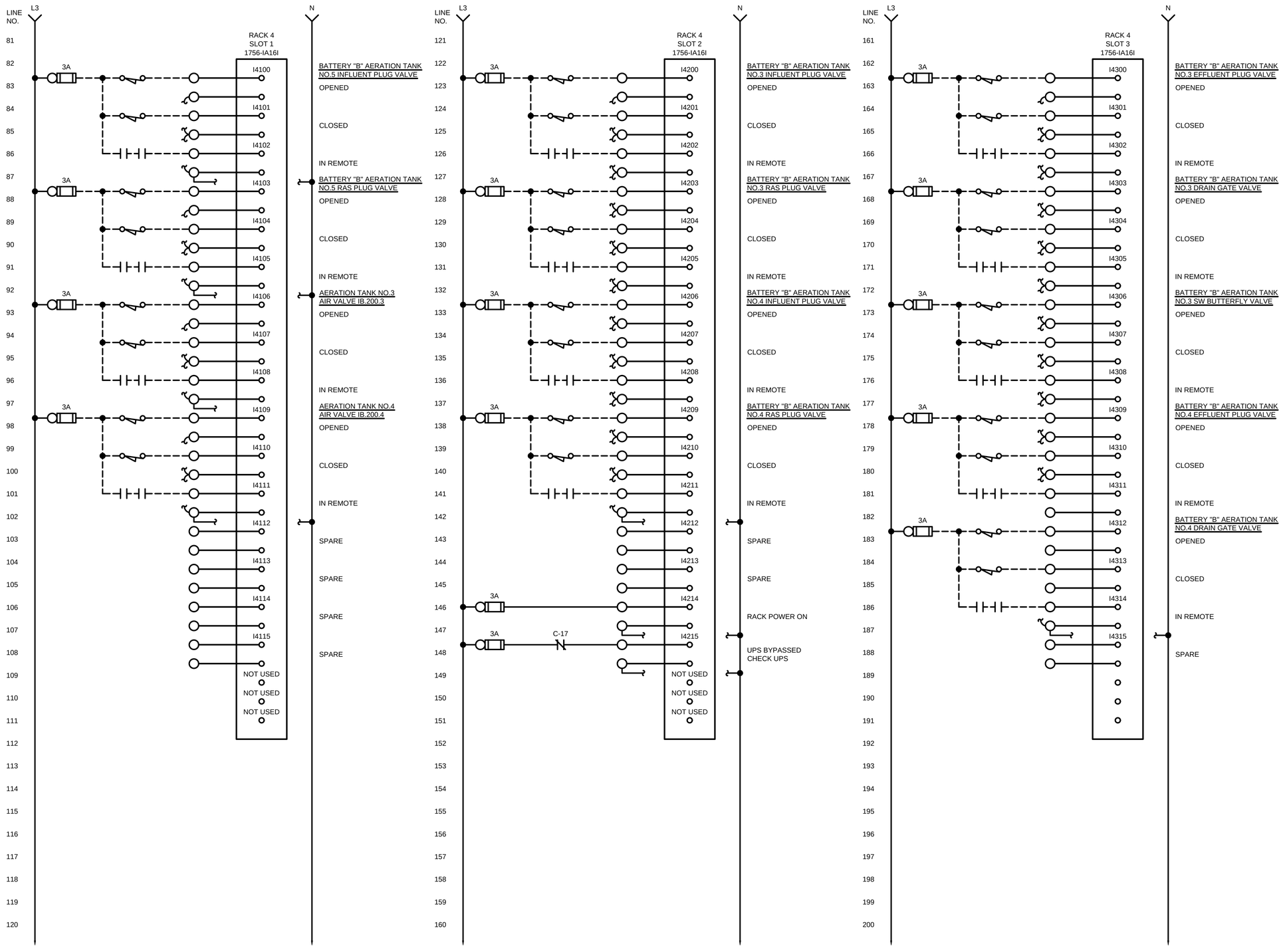

TETRA TECH
www.tetratech.com
401 SOUTH WASHINGTON SQUARE, SUITE 100
LANSING, MI, 48933
PHONE: 517.316.3930, FAX: 517.484.8140

MARK	DATE	DESCRIPTION	BY
	5/29/20	ISSUED FOR BIDS	

CITY OF FLINT, MICHIGAN
FLINT WPC AERATION SYSTEM IMPROVEMENTS
INSTRUMENTATION
BLOWER I/O PANEL NO.4
RACK 4 WIRING DIAGRAM

PROJ:	200-156238-19001
DESN:	GCJ
DRWN:	JLS
CHKD:	MSJ/WAP

I-323

Copyright: Tetra Tech

Bar Measures 1 inch, otherwise drawing not to scale

5/26/2020 11:13:12 AM - \\TTS073FS1\PROJECTS\ER\156238\200-156238-19001\CAD\SHEETFILES\EI-323_BLOWER 4 WIR DIA.DWG - SHANK, JASON

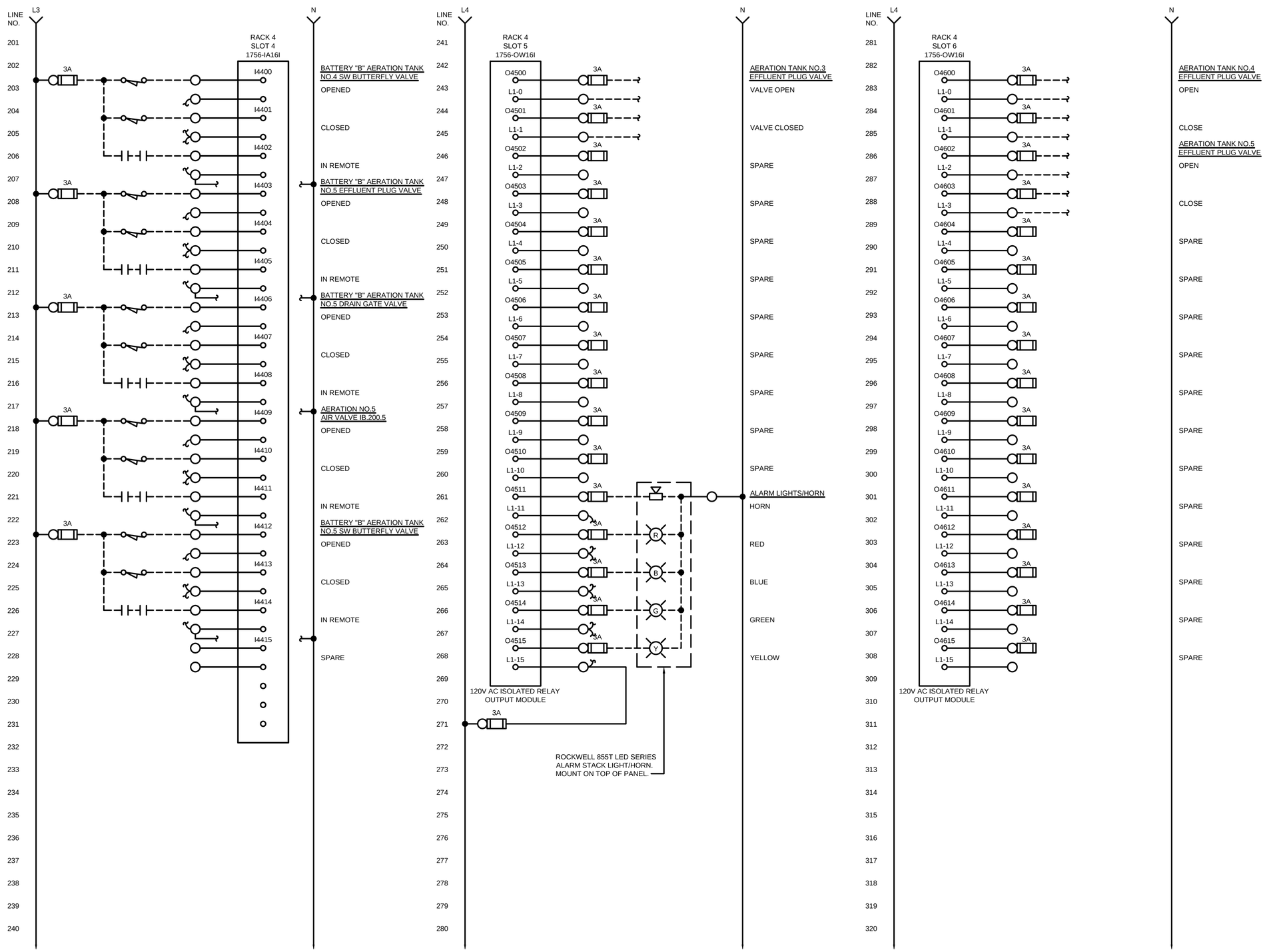

TETRA TECH
www.tetratech.com
401 SOUTH WASHINGTON SQUARE, SUITE 100
LANSING, MI. 48933
PHONE: 517.316.3930, FAX: 517.484.8140

MARK	DATE	DESCRIPTION	BY
	5/29/20	ISSUED FOR BIDS	

CITY OF FLINT, MICHIGAN

FLINT WPC AERATION SYSTEM IMPROVEMENTS

INSTRUMENTATION BLOWER I/O PANEL NO.4 RACK 4 WIRING DIAGRAM

PROJ:	200-156238-19001
DESN:	GCJ
DRWN:	JLS
CHKD:	MSJ/WAP

I-324

Copyright: Tetra Tech

Bar Measures 1 inch, otherwise drawing not to scale

5/26/2020 11:27:06 AM - \\TTS073FS1\PROJECTS\ER\156238\200-156238-19001\CAD\SHEETFILES\EI-324_BLOWER 4 WIR DIA_II.DWG - SHANK, JASON

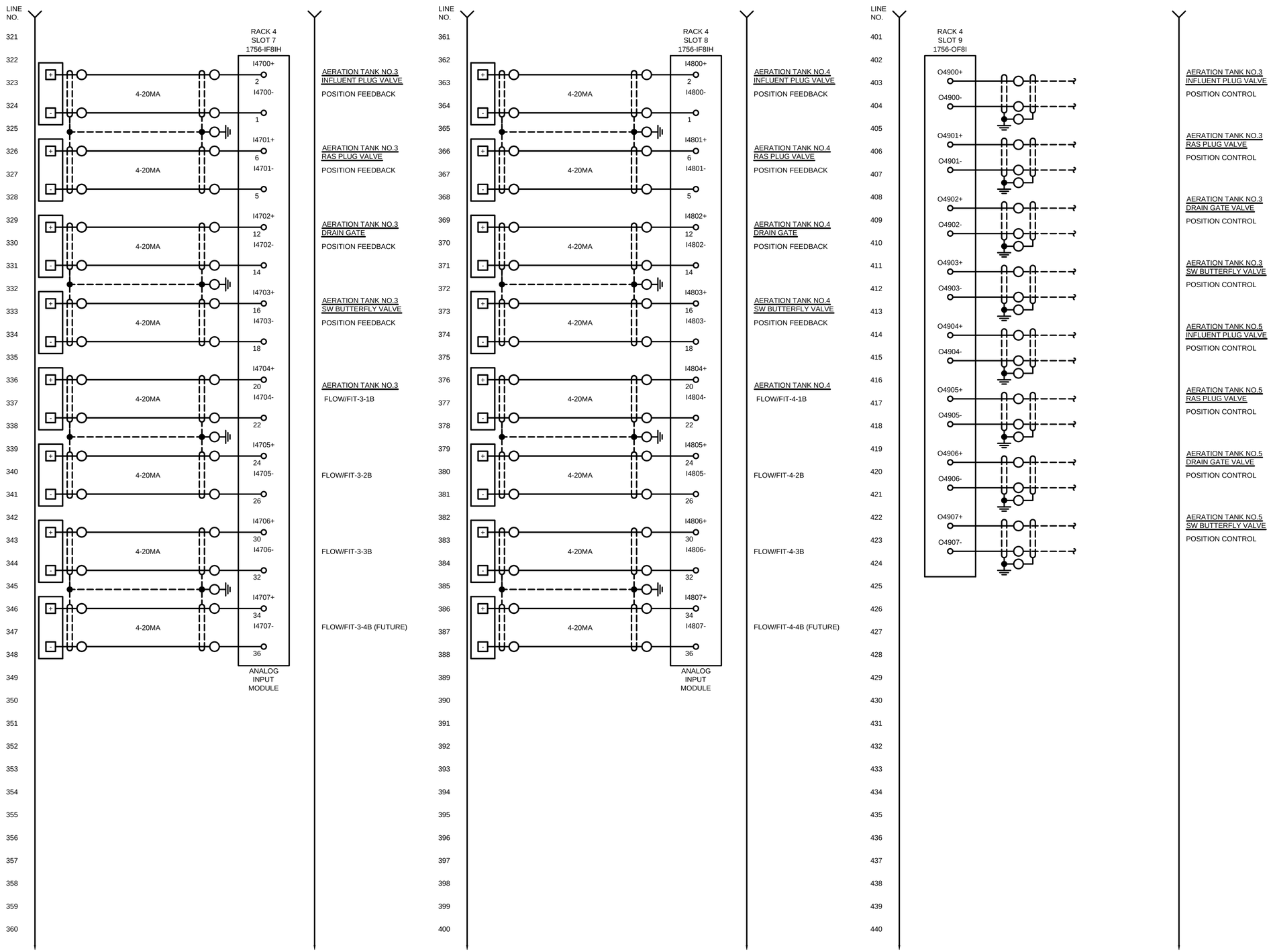

TETRA TECH
www.tetratech.com
401 SOUTH WASHINGTON SQUARE, SUITE 100
LANSING, MI. 48933
PHONE: 517.316.3930, FAX: 517.484.8140

MARK	DATE	DESCRIPTION	BY
	5/29/20	ISSUED FOR BIDS	

CITY OF FLINT, MICHIGAN
FLINT WPC AERATION SYSTEM IMPROVEMENTS
INSTRUMENTATION
BLOWER I/O PANEL NO.4
RACK 4 WIRING DIAGRAM

PROJ:	200-156238-19001
DESN:	GCJ
DRWN:	JLS
CHKD:	MSJ/WAP

I-325

Copyright: Tetra Tech

Bar Measures 1 inch, otherwise drawing not to scale

5/26/2020 11:32:37 AM - \\TTS073FS1□ROJECTS\IER\156238\200-156238-19001\CAD\SHEETFILES\EI\-325_BLOWER 4 WIR DIA_III.DWG - SHANK, JASON

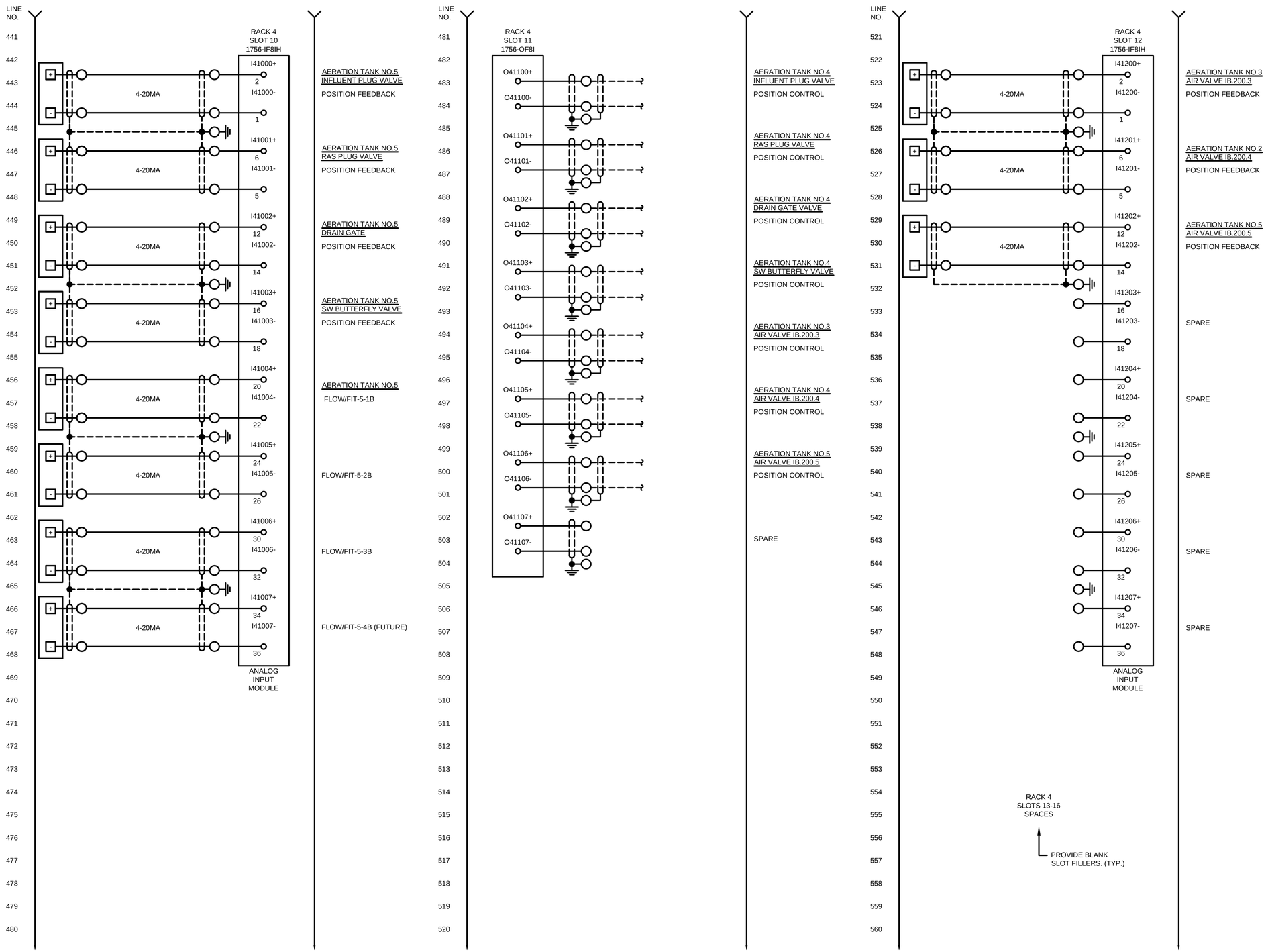

TETRA TECH
www.tetratech.com
401 SOUTH WASHINGTON SQUARE, SUITE 100
LANSING, MI. 48933
PHONE: 517.316.3930, FAX: 517.484.8140

MARK	DATE	DESCRIPTION	BY
	5/29/20	ISSUED FOR BIDS	

CITY OF FLINT, MICHIGAN
FLINT WPC AERATION SYSTEM IMPROVEMENTS
INSTRUMENTATION
BLOWER I/O PANEL NO.4
RACK 4 WIRING DIAGRAM

PROJ:	200-156238-19001
DESN:	GCJ
DRWN:	JLS
CHKD:	MSJ/WAP

I-326

Copyright: Tetra Tech

Bar Measures 1 inch, otherwise drawing not to scale

5/26/2020 11:40:37 AM - \\TTS073FS1□ROJECTS\IER\156238\200-156238-19001\CAD\SHEETFILES\EI\-326_BLOWER 4 WIR DIA_IV.DWG - SHANK, JASON

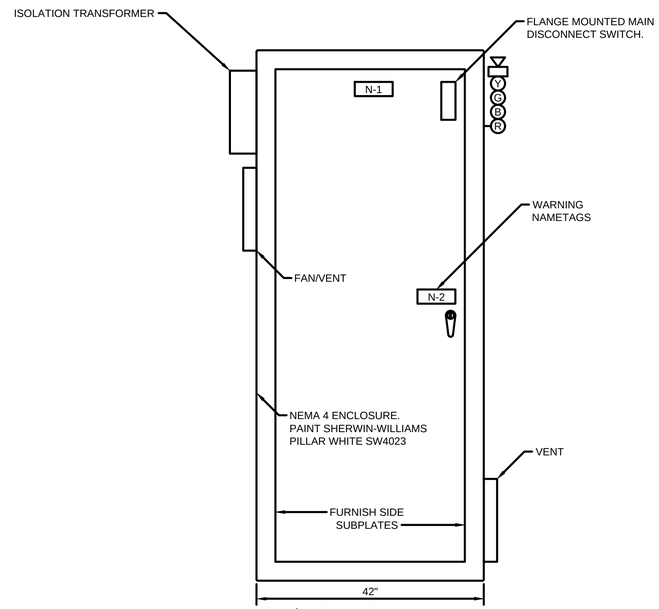

BLOWER I/O PANEL NO.5 LAYOUT

NEMA 4 ENCLOSURE
SIZE: - 60"H X 42"W X 24"D - MINIMUM

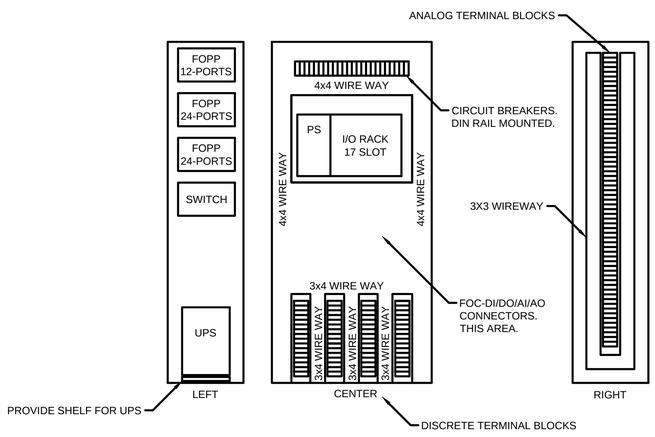

SUBPLATE LAYOUT

NOTE: NOT ALL SUBPLATE DEVICES ARE SHOWN.
NO SCALE

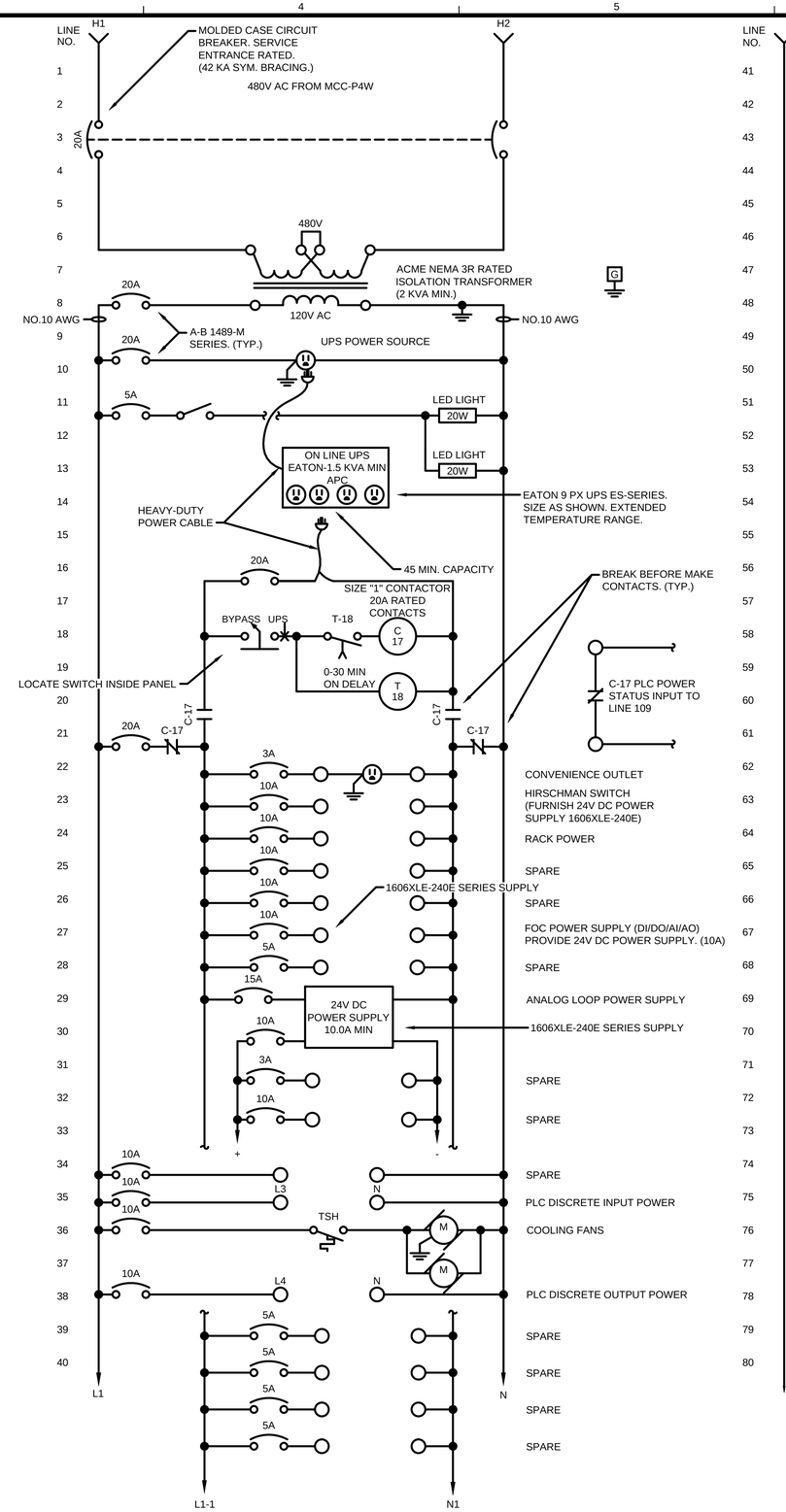

TETRA TECH
www.tetratech.com
401 SOUTH WASHINGTON SQUARE, SUITE 100
LANSING, MI. 48933
PHONE: 517.316.3930, FAX: 517.484.8140

MARK	DATE	DESCRIPTION	BY
	5/29/20	ISSUED FOR BIDS	

CITY OF FLINT, MICHIGAN
FLINT WPC AERATION SYSTEM IMPROVEMENTS
INSTRUMENTATION
BLOWER I/O PANEL NO.5
RACK 5 WIRING DIAGRAM

PROJ:	200-156238-19001
DESN:	GCJ
DRWN:	JLS
CHKD:	MSJ/WAP

I-327

Copyright: Tetra Tech

Bar Measures 1 inch, otherwise drawing not to scale

5/27/2020 12:47:02 AM - \\TTS073FS1\PROJECTS\IER\156238\200-156238-19001\CAD\SHEETFILES\EI\-327_BLWR PNL 5 LAYOUT_WIR DIA.DWG - SHANK, JASON

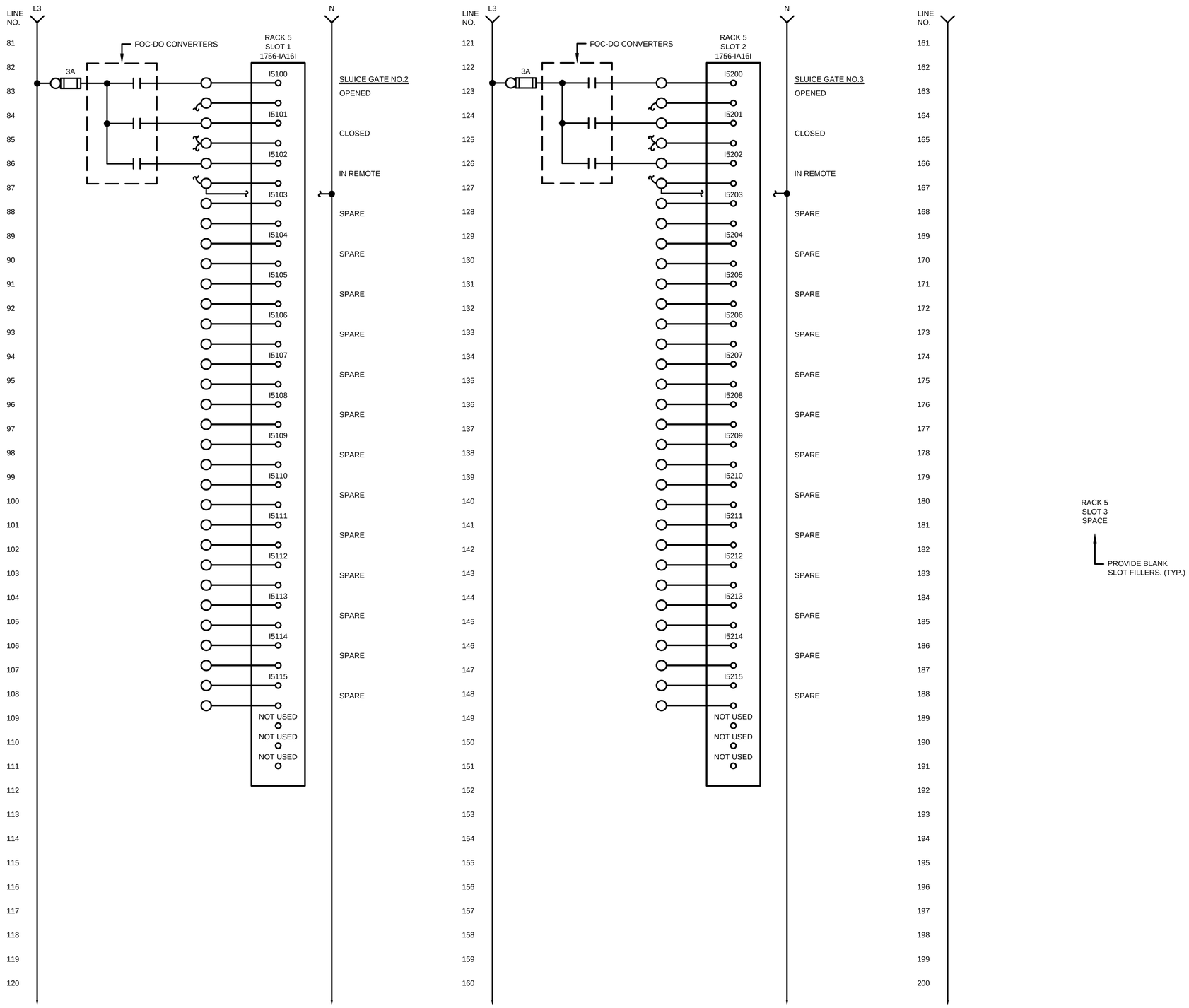

TETRA TECH
www.tetratech.com
401 SOUTH WASHINGTON SQUARE, SUITE 100
LANSING, MI. 48933
PHONE: 517.316.3930, FAX: 517.484.8140

MARK	DATE	DESCRIPTION	BY
	5/29/20	ISSUED FOR BIDS	

CITY OF FLINT, MICHIGAN

FLINT WPC AERATION
SYSTEM IMPROVEMENTS

INSTRUMENTATION
BLOWER I/O PANEL NO.5
RACK 5 WIRING DIAGRAM

PROJ:	200-156238-19001
DESN:	GCJ
DRWN:	JLS
CHKD:	MSJ/WAP

I-328

Copyright: Tetra Tech

Bar Measures 1 inch, otherwise drawing not to scale

5/26/2020 12:07:41 PM - \\TTS073FS1\PROJECTS\ER\156238\200-156238-19001\CAD\SHEETFILES\EI-328_BLOWER 5 WIR DIA.DWG - SHANK, JASON

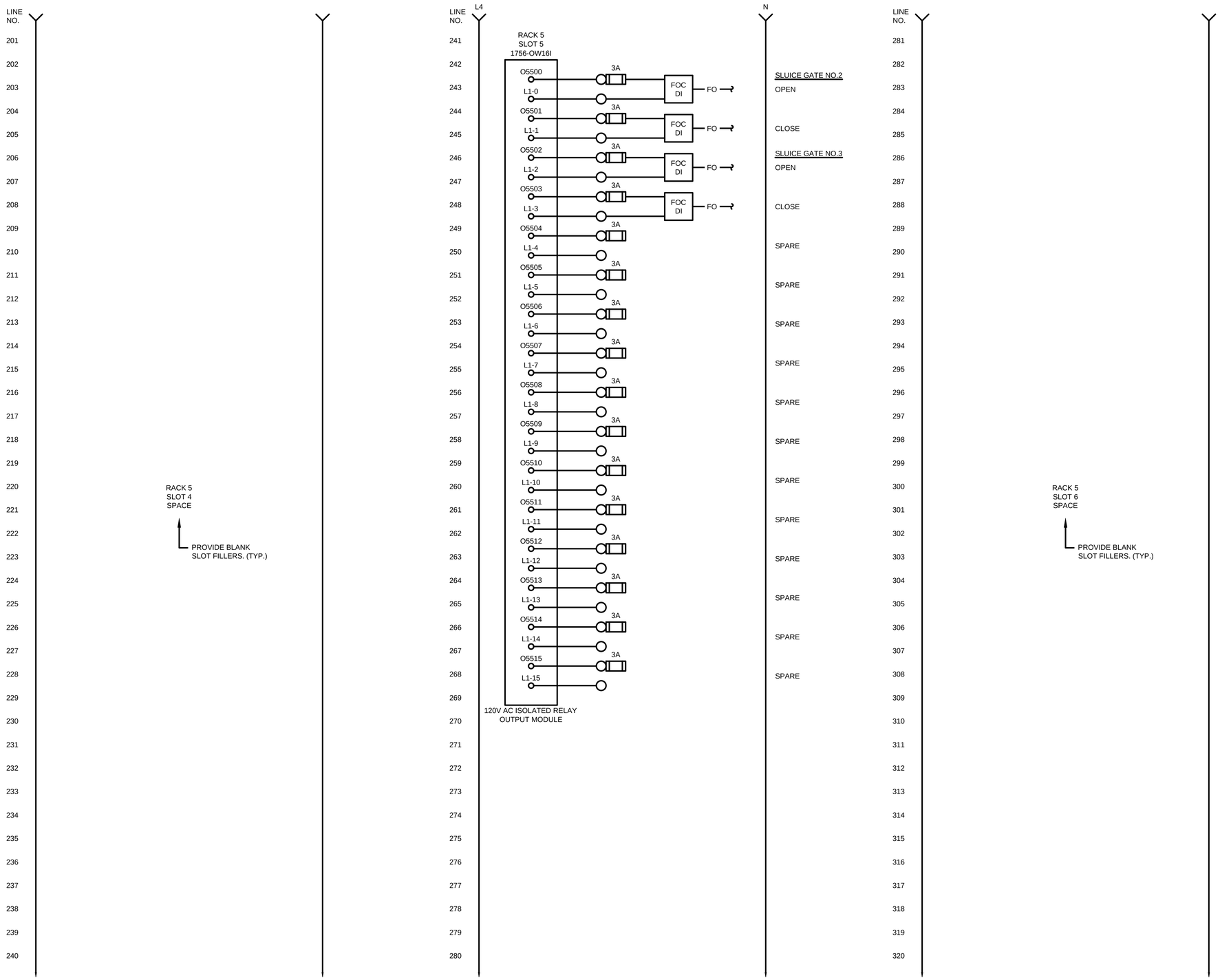

TETRA TECH
www.tetratech.com
401 SOUTH WASHINGTON SQUARE, SUITE 100
LANSING, MI. 48933
PHONE: 517.316.3930, FAX: 517.484.8140

MARK	DATE	DESCRIPTION	BY
	5/29/20	ISSUED FOR BIDS	

CITY OF FLINT, MICHIGAN

FLINT WPC AERATION SYSTEM IMPROVEMENTS

INSTRUMENTATION BLOWER I/O PANEL NO.5 RACK 5 WIRING DIAGRAM

PROJ:	200-156238-19001
DESN:	GCJ
DRWN:	JLS
CHKD:	MSJ/WAP

I-329

Copyright: Tetra Tech

Bar Measures 1 inch, otherwise drawing not to scale

5/26/2020 12:08:54 PM - \\TTS073FS1\PROJECTS\IER\156238\200-156238-19001\CAD\SHEETFILES\EI-329_BLOWER 5 WIR DIA_II.DWG - SHANK, JASON

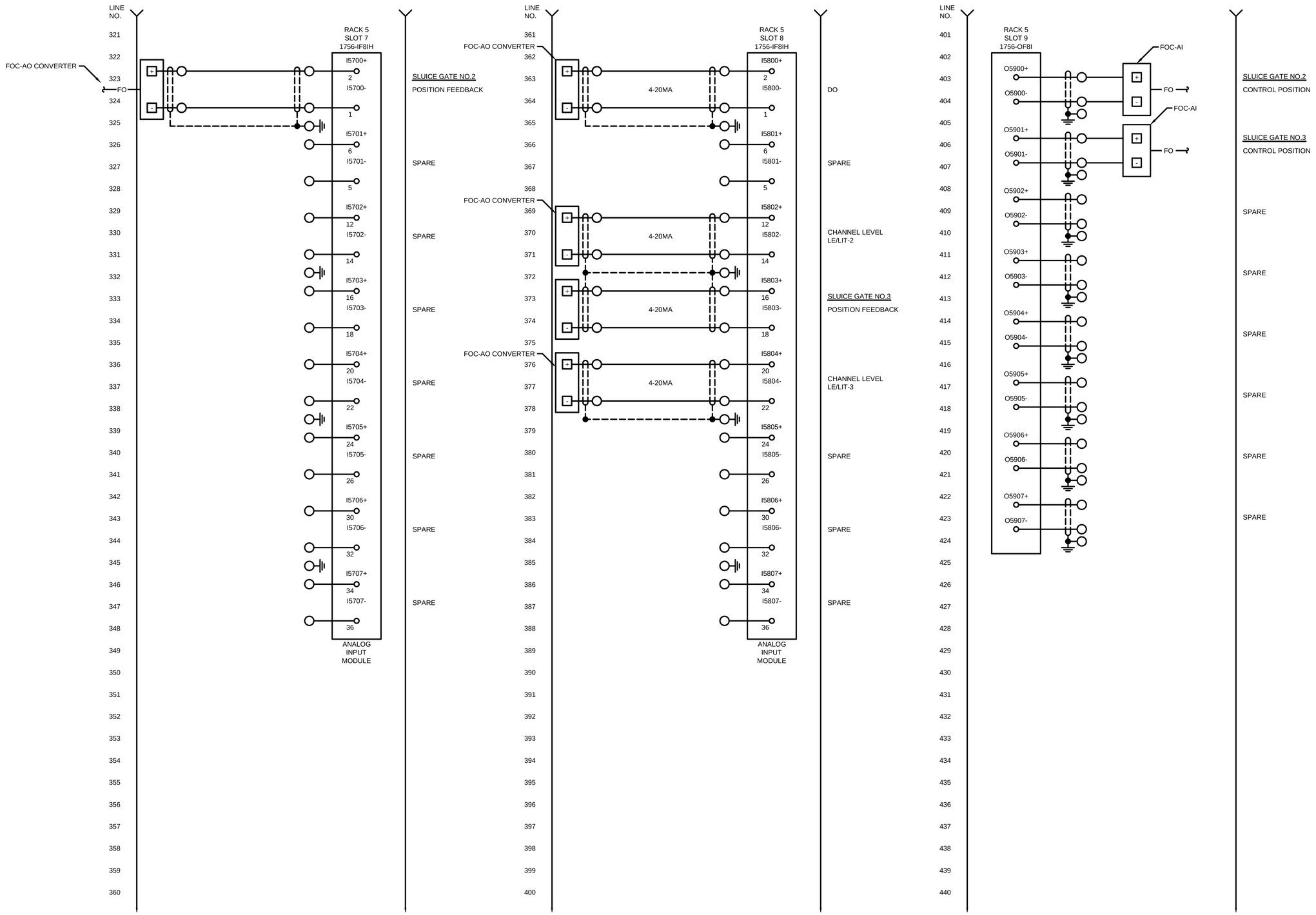

TETRA TECH

www.tetratech.com
401 SOUTH WASHINGTON SQUARE, SUITE 100
LANSING, MI. 48933
PHONE: 517.316.3930, FAX: 517.484.8140

MARK	DATE	DESCRIPTION	BY
	5/29/20	ISSUED FOR BIDS	

CITY OF FLINT, MICHIGAN

FLINT WPC AERATION
SYSTEM IMPROVEMENTS

INSTRUMENTATION
BLOWER I/O PANEL NO.5
RACK 5 WIRING DIAGRAM

PROJ:	200-156238-19001
DESN:	GCJ
DRWN:	JLS
CHKD:	MSJ/WAP

I-330

Copyright: Tetra Tech

Bar Measures 1 inch, otherwise drawing not to scale

5/27/2020 12:49:34 AM - \\TTSO73FS1\PROJECTS\IER\156238\200-156238-19001\CAD\SHEETFILES\EI-330_BLOWER 5 WIR DIA_III.DWG - SHANK, JASON

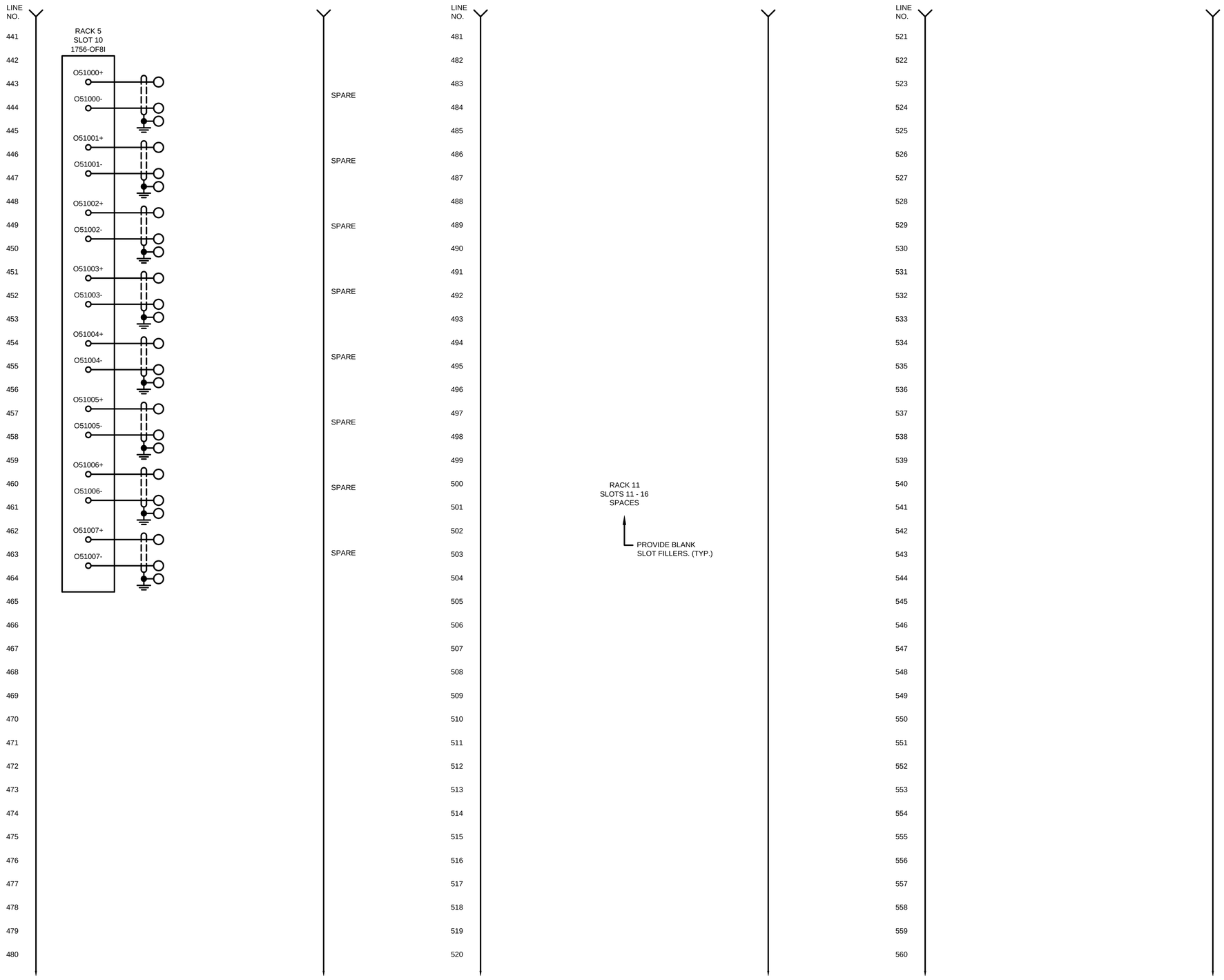

TETRA TECH
www.tetratech.com
401 SOUTH WASHINGTON SQUARE, SUITE 100
LANSING, MI. 48933
PHONE: 517.316.3930, FAX: 517.484.8140

MARK	DATE	DESCRIPTION	BY
	5/29/20	ISSUED FOR BIDS	

CITY OF FLINT, MICHIGAN

FLINT WPC AERATION
SYSTEM IMPROVEMENTS

INSTRUMENTATION
BLOWER I/O PANEL NO.5
RACK 5 WIRING DIAGRAM

PROJ: 200-156238-19001
DESN: GCJ
DRWN: JLS
CHKD: MSJ/WAP

I-331

Copyright: Tetra Tech

Bar Measures 1 inch, otherwise drawing not to scale

5/26/2020 12:21:39 PM - \\TTS073FS1\PROJECTS\IER\156238\200-156238-19001\CAD\SHEETFILES\EII-331_BLOWER 5 WIR DIA_IV.DWG - SHANK, JASON

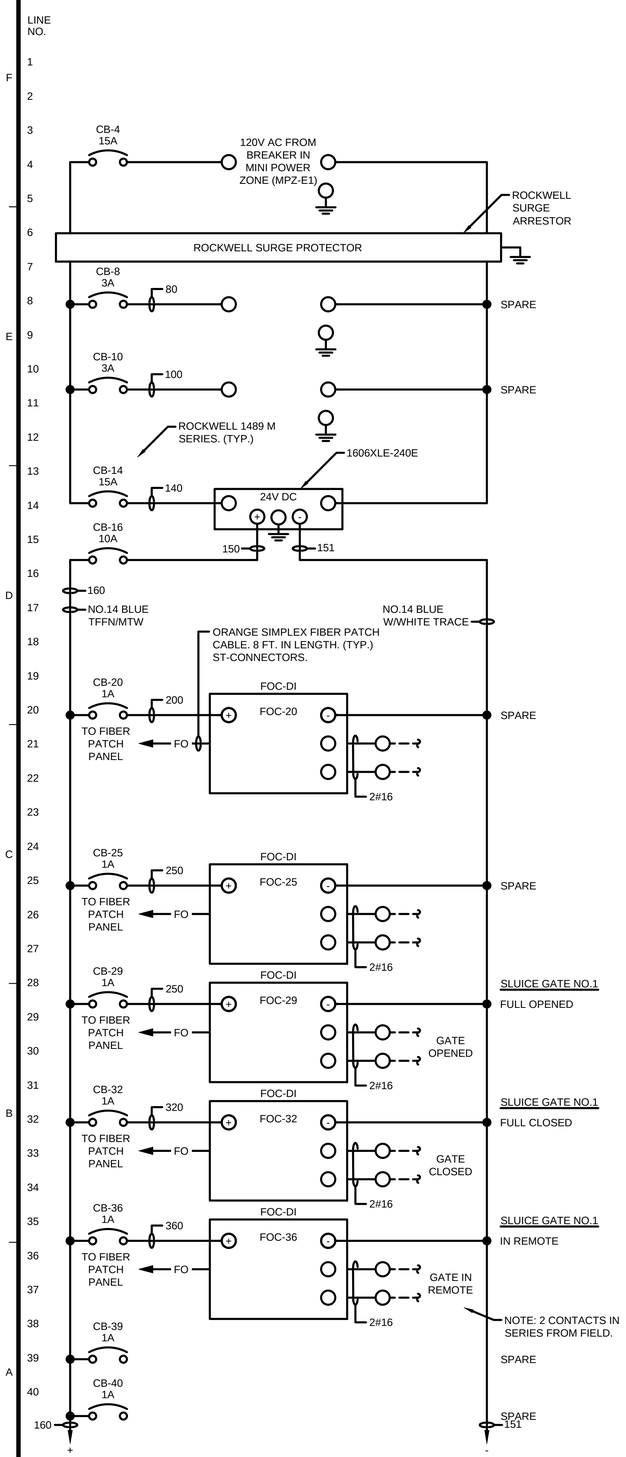

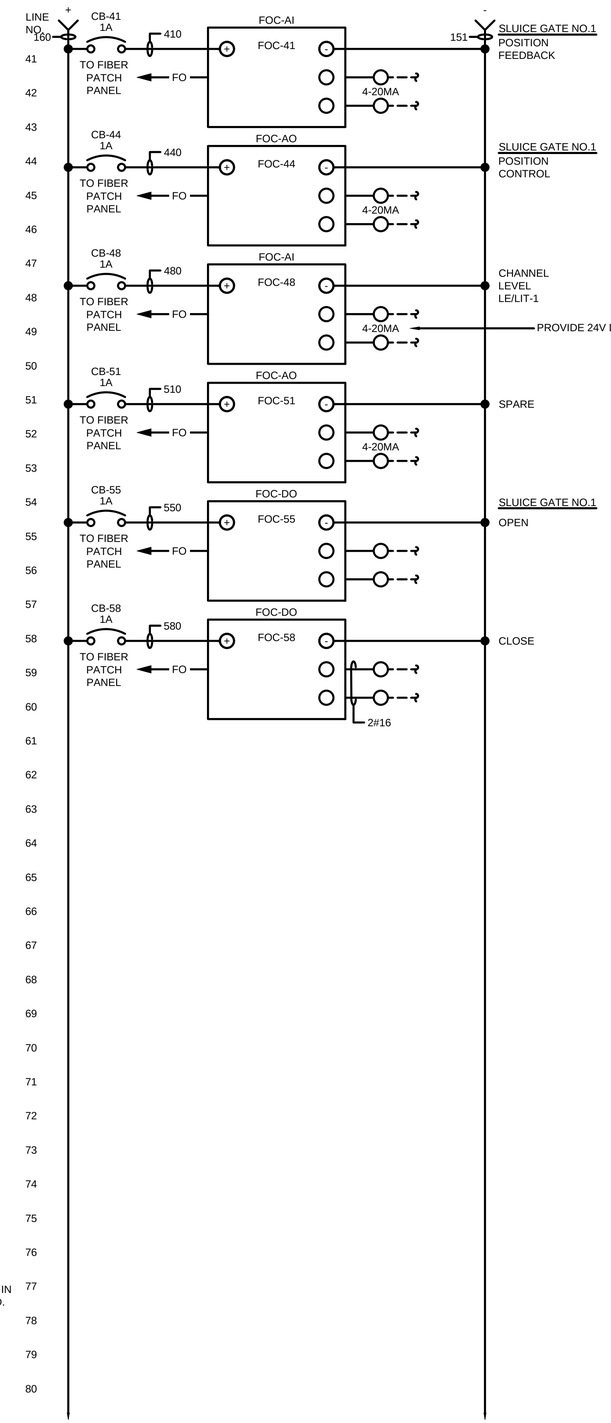

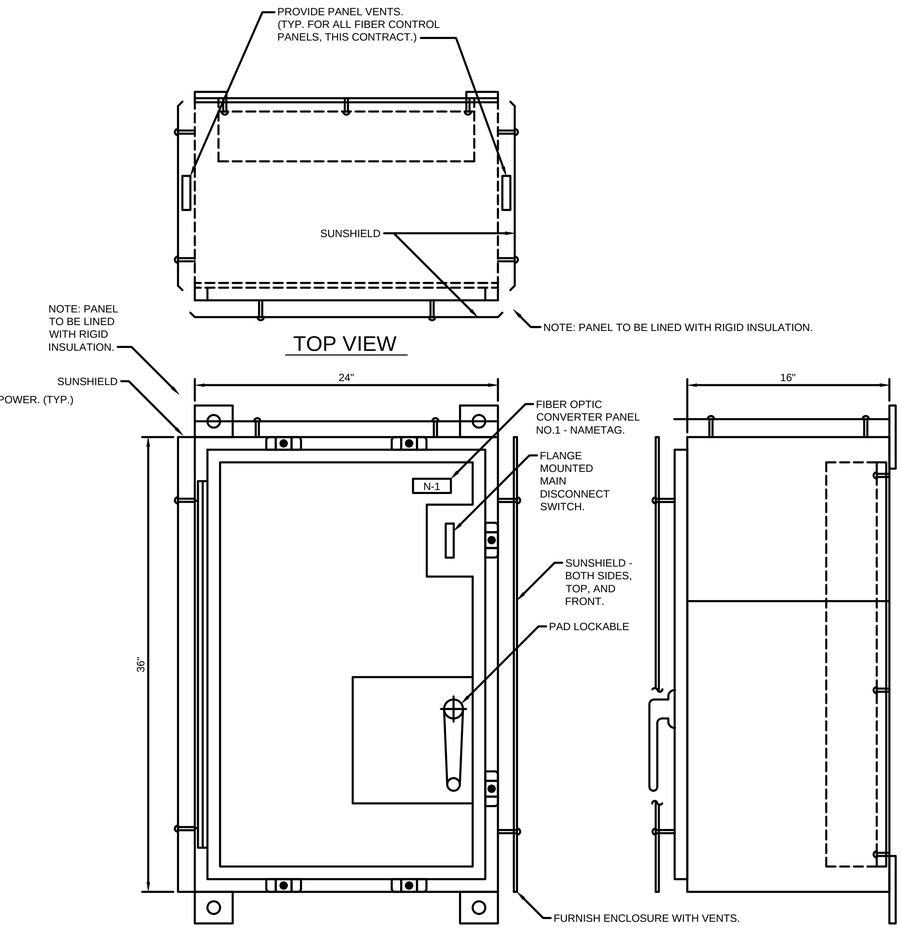

FIBER OPTIC CONTROL PANEL NO.1

NEMA 4, STAINLESS STEEL W/SUNSHIELDS.
SIZE: 36"H x 24"W x 16"D MINIMUM.
PAINT SUNSHIELDS, AND ENCLOSURE SHERWIN WILLIAMS SW4023 (PILLAR WHITE)

SIDE VIEW

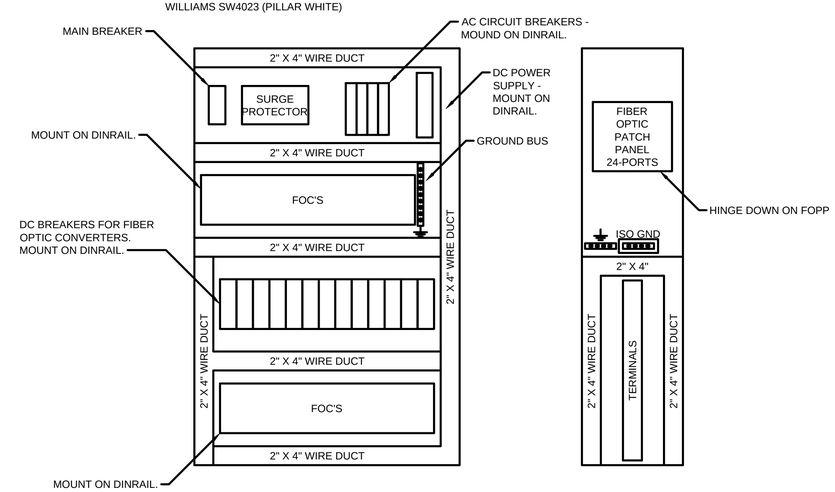

SUBPLATE A

SIZE: 33"H X 21"W

SIDE SUBPLATE B

SIZE: 33"H X 8"W

TETRA TECH
www.tetratech.com
401 SOUTH WASHINGTON SQUARE, SUITE 100
LANSING, MI. 48933
PHONE: 517.316.3930, FAX: 517.484.8140

MARK	DATE	DESCRIPTION	BY
	5/29/20	ISSUED FOR BIDS	

CITY OF FLINT, MICHIGAN
FLINT WPC AERATION SYSTEM IMPROVEMENTS
INSTRUMENTATION
FCP NO.1
LAYOUT, WIRING DIAGRAM

PROJ:	200-156238-19001
DESN:	GCJ
DRWN:	JLS
CHKD:	MSJ/WAP

I-332

Copyright: Tetra Tech

Bar Measures 1 inch, otherwise drawing not to scale

5/26/2020 12:32:22 PM - \\TTS073FS1\PROJECTS\IER\156238\200-156238-19001\CAD\SHEETFILES\EI-332_FCP 1.DWG - SHANK, JASON

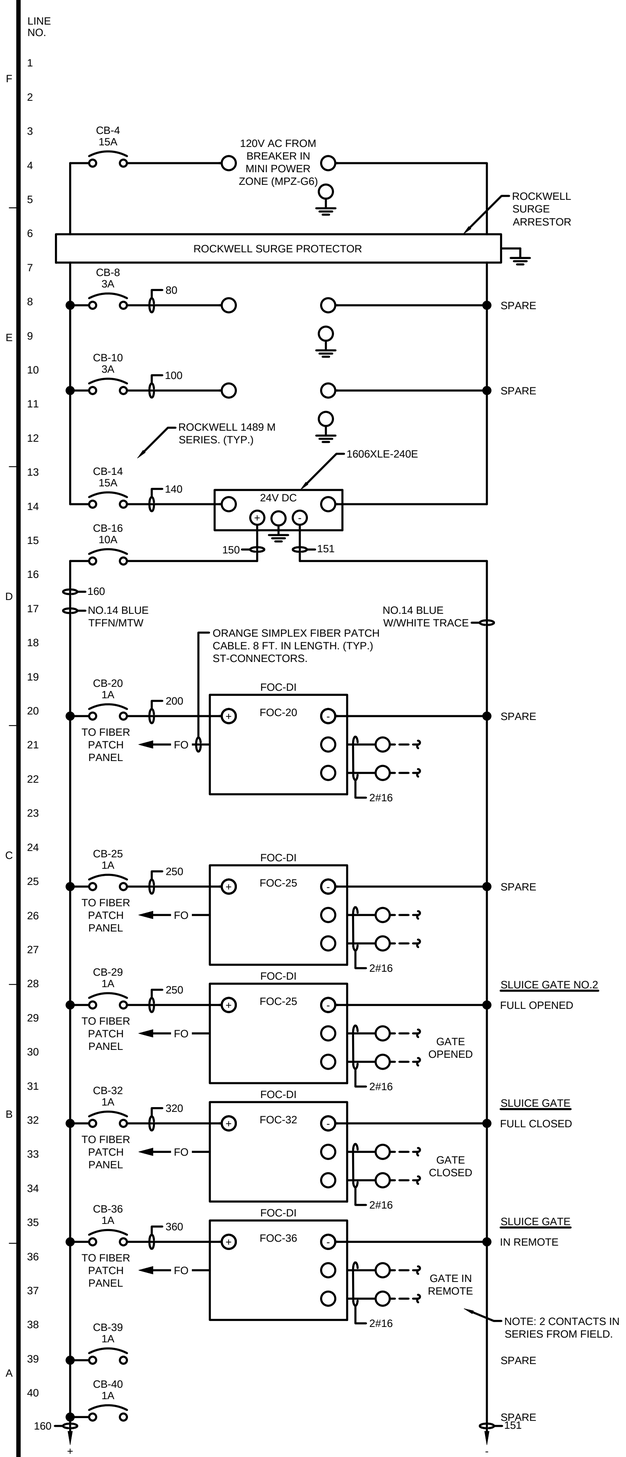

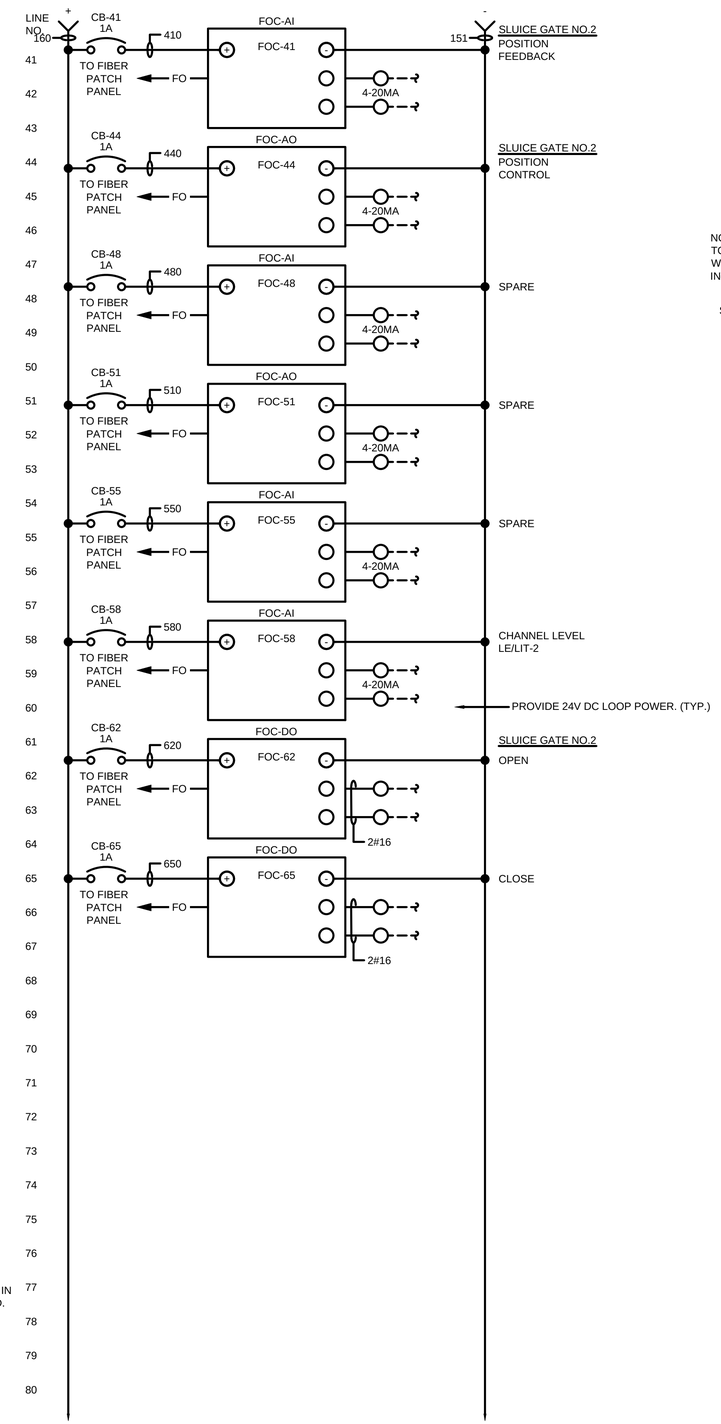

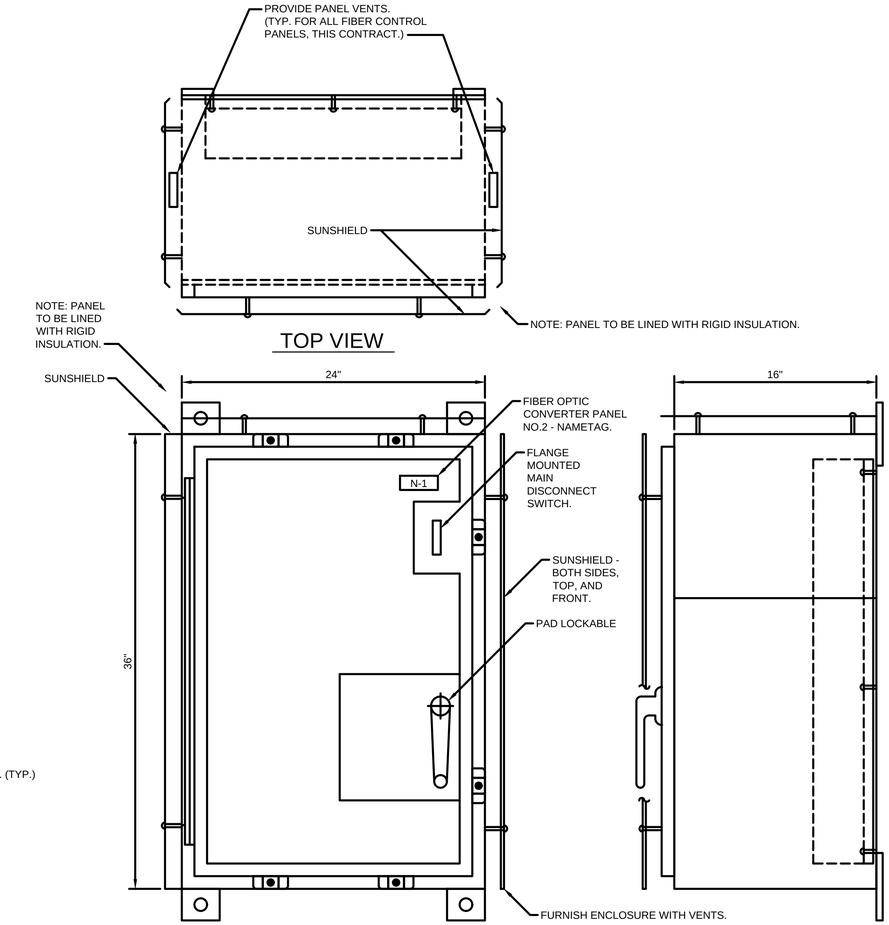

FIBER OPTIC CONTROL PANEL NO.2

NEMA 4, STAINLESS STEEL W/SUNSHIELDS.
SIZE: 36"H x 24"W x 16"D MINIMUM.
PAINT: SUNSHIELDS, AND ENCLOSURE SHERWIN WILLIAMS SW4023 (PILLAR WHITE)

SIDE VIEW

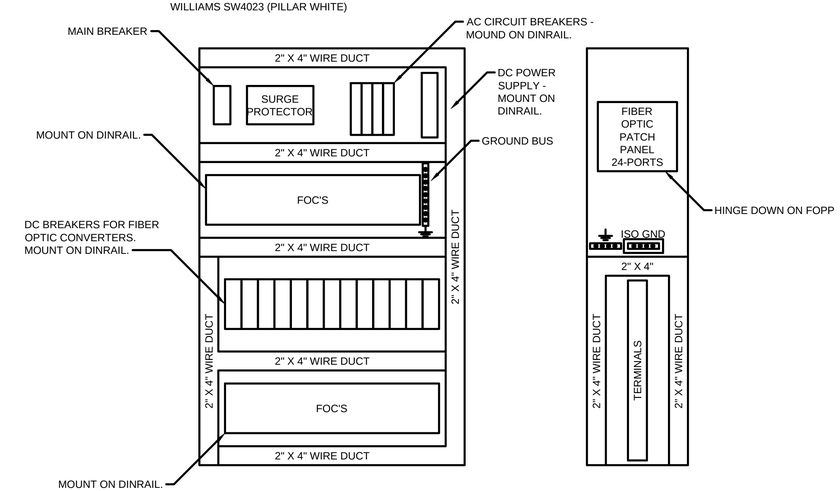

SUBPLATE A

SIZE: 33"H X 21"W

SIDE SUBPLATE B

SIZE: 33"H X 8"W

TETRA TECH
www.tetratech.com
401 SOUTH WASHINGTON SQUARE, SUITE 100
LANSING, MI, 48933
PHONE: 517.316.3930, FAX: 517.484.8140

MARK	DATE	DESCRIPTION	BY
	5/29/20	ISSUED FOR BIDS	

CITY OF FLINT, MICHIGAN

FLINT WPC AERATION SYSTEM IMPROVEMENTS

INSTRUMENTATION FCP NO.2 LAYOUT, WIRING DIAGRAM

PROJ:	200-156238-19001
DESN:	GCJ
DRWN:	JLS
CHKD:	MSJ/WAP

I-333

Copyright: Tetra Tech

Bar Measures 1 inch, otherwise drawing not to scale

5/26/2020 12:37:32 PM - \\TTS073FS1...ROJECTS\IER\156238\200-156238-19001\CAD\SHEETFILES\EI-333_FCP 2.DWG - SHANK, JASON

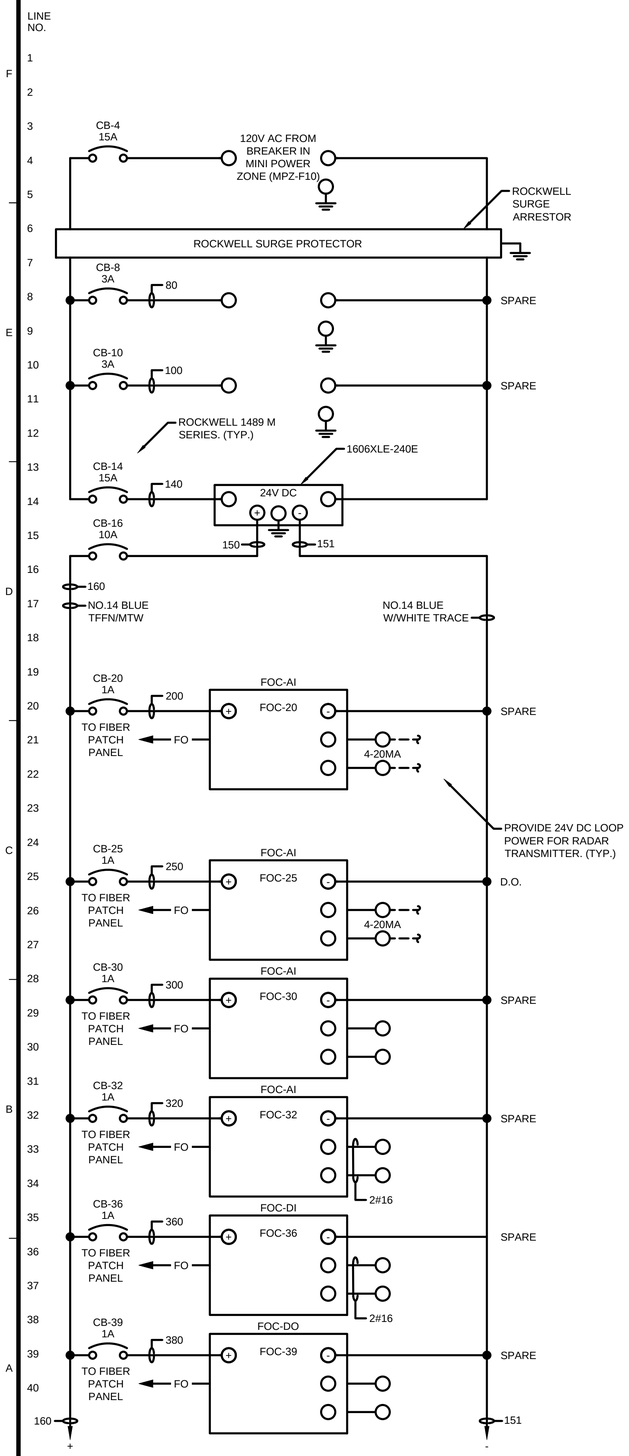

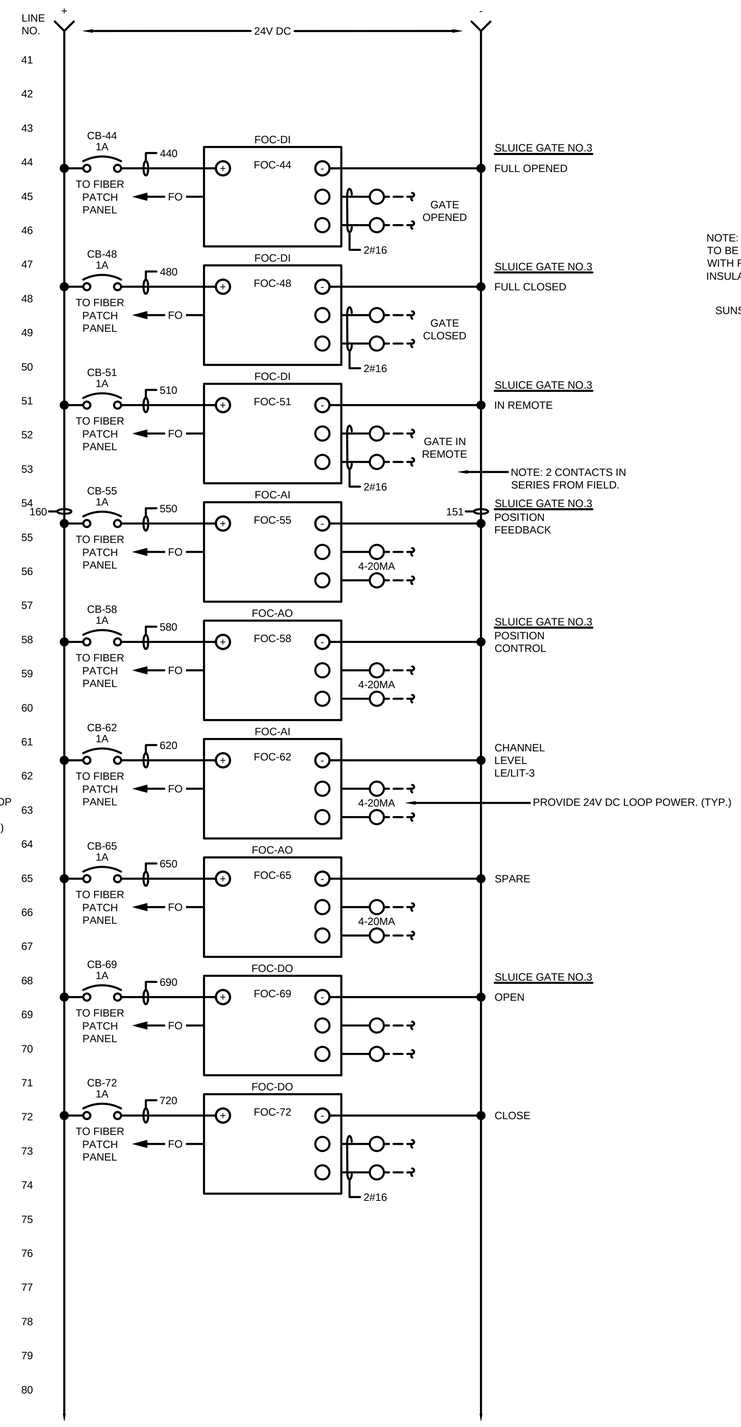

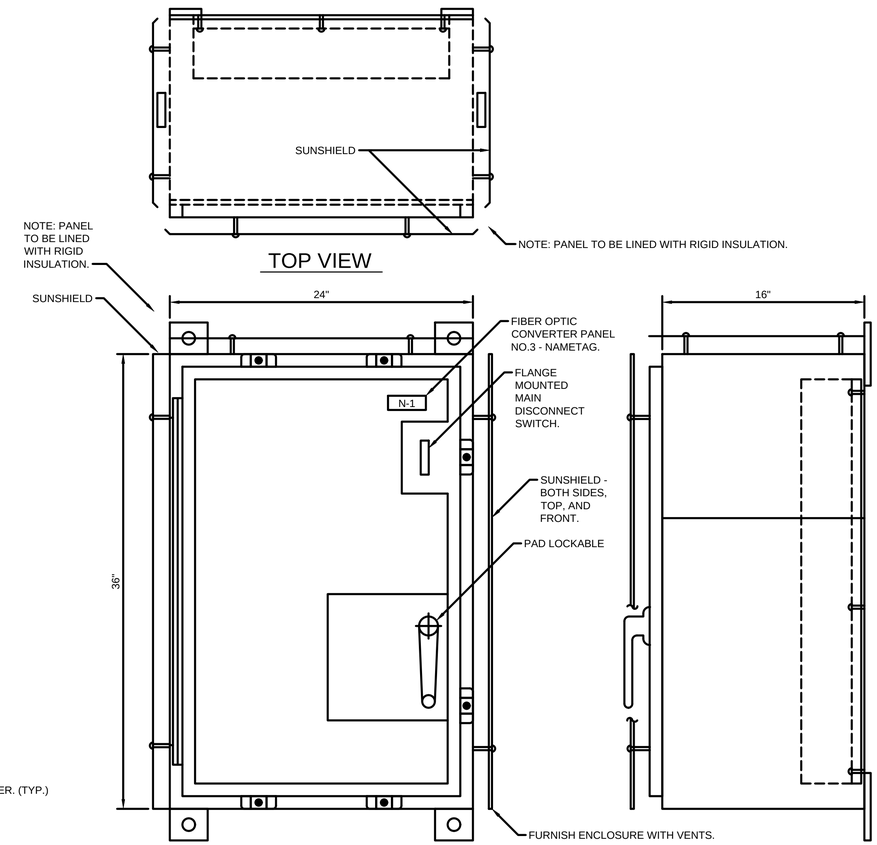

FIBER OPTIC CONTROL PANEL NO.3

NEMA 4, STAINLESS STEEL W/SUNSHIELDS.
SIZE: AS REQUIRED.
PAINT SUNSHIELDS, AND ENCLOSURE SHERWIN WILLIAMS SW4023 (PILLAR WHITE)

SIDE VIEW

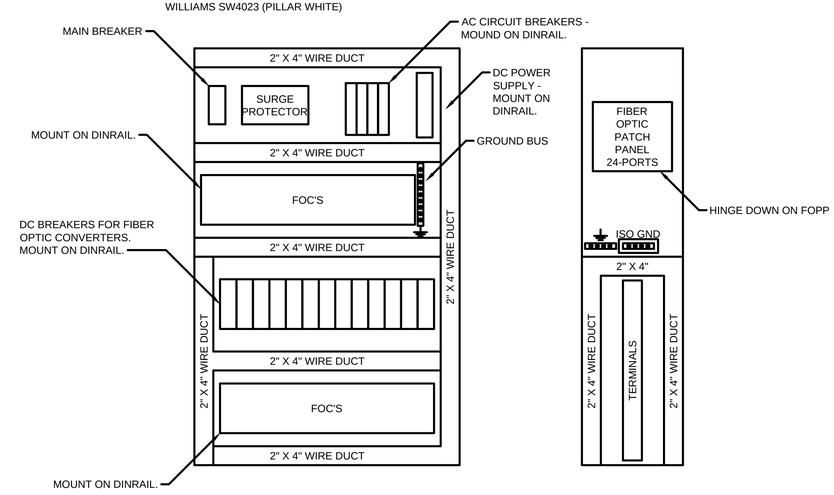

SUBPLATE A

SIZE: 33"H X 21"W

SIDE SUBPLATE B

SIZE: 33"H X 8"W

TETRA TECH
www.tetratech.com
401 SOUTH WASHINGTON SQUARE, SUITE 100
LANSING, MI, 48933
PHONE: 517.316.3930, FAX: 517.484.8140

MARK	DATE	DESCRIPTION	BY
	5/29/20	ISSUED FOR BIDS	

CITY OF FLINT, MICHIGAN
FLINT WPC AERATION SYSTEM IMPROVEMENTS
INSTRUMENTATION
FCP NO.3
LAYOUT, WIRING DIAGRAM

PROJ:	200-156238-19001
DESN:	GCJ
DRWN:	JLS
CHKD:	MSJ/WAP

I-334

Copyright: Tetra Tech

Bar Measures 1 inch, otherwise drawing not to scale

5/26/2020 12:39:55 PM - \\TTS073FS1...ROJECTS\IER\156238\200-156238-19001\CAD\SHEETFILES\EI-334_FCP 3.DWG - SHANK, JASON

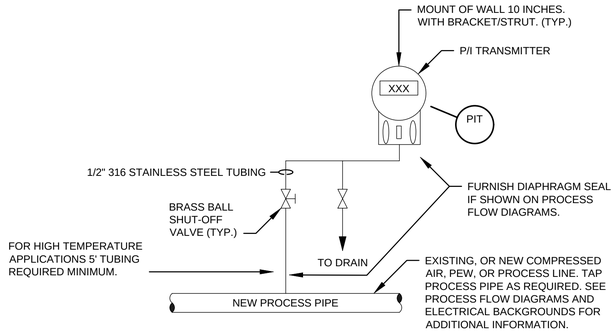

TYPICAL PRESSURE TRANSMITTER DETAIL

NO SCALE

PIT 1 | PIT 2 | PIT | PIT

DETAILS TYPICAL. SEE PROCESS FLOW DIAGRAMS FOR ADDITIONAL INSTRUMENTS TO BE PROVIDED, NOT LISTED HERE.

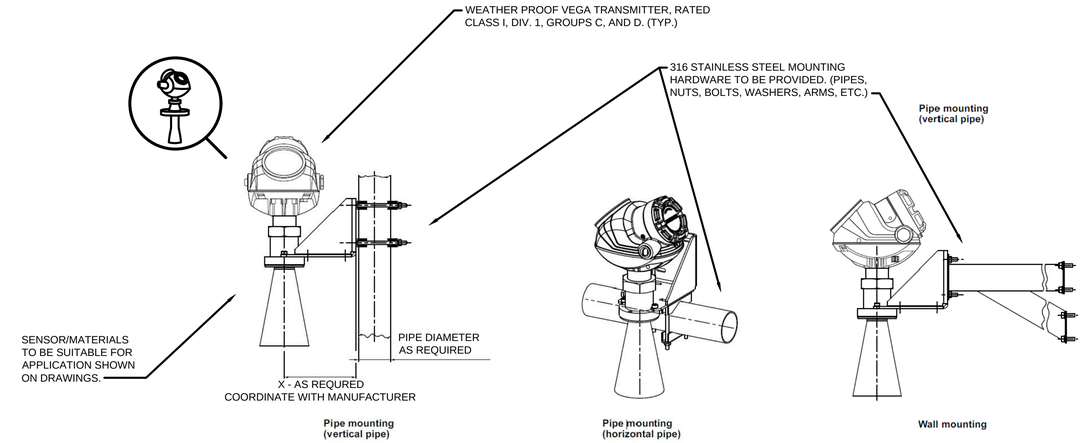

LEVEL TRANSMITTER (RADAR) DETAILS (VEGA)

NO SCALE

LIT 1 | LIT 2 | LIT 3

LE 1 | LE 2 | LE 3

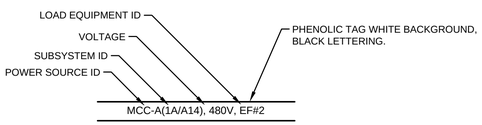

FEEDER & BRANCH CIRCUIT RACEWAY LABELS

NOTE:

1. IN ACCESSIBLE CEILING SPACES AND EXPOSED IN UNFINISHED AREAS, LABEL CONDUIT WITH PANEL AND CIRCUIT NUMBERS OF CONDUCTORS ROUTED THROUGH THE CONDUIT. LABEL CONDUIT AT WALL PENETRATIONS AND CONNECTIONS TO ALL PANELS, JUNCTION BOXES, AND EQUIPMENT SERVED.

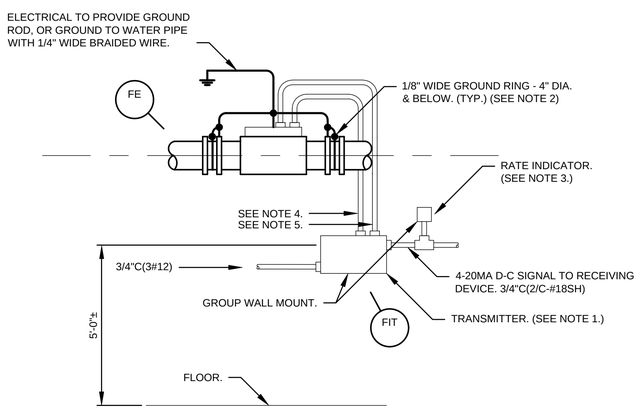

NOTES:

1. LOCATION FOR TRANSMITTERS NOT INTEGRALLY MOUNTED ON THE FLOW METER.
2. GROUND MAGMETER AS INSTRUCTED BY THE VENDOR.
3. INSTALL SEPARATELY MOUNTED INDICATOR. NOT REQUIRED ON INDICATING WALL MOUNTED TRANSMITTERS.
4. POWER WIRING. 1"C POWER AS SUPPLIED BY MANUFACTURER.
5. SIGNAL WIRING. 1"C SIGNAL AS SUPPLIED BY MANUFACTURER.

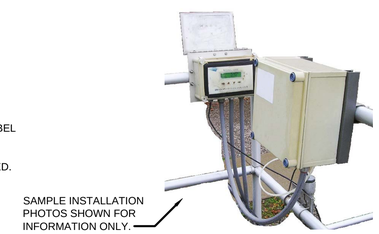

SAMPLE INSITE IG DISSOLVED OXYGEN TRANSMITTER/COMPRESSOR PHOTO

NO SCALE
SEE NOTES BELOW FOR WORK REQ'D.

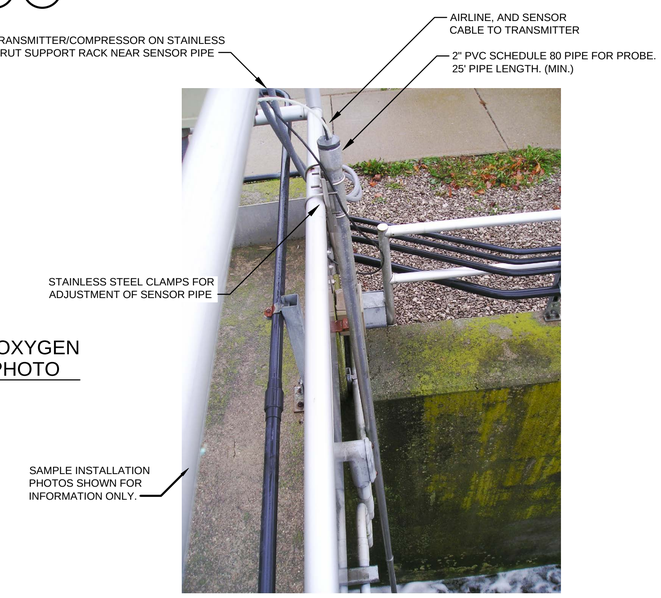

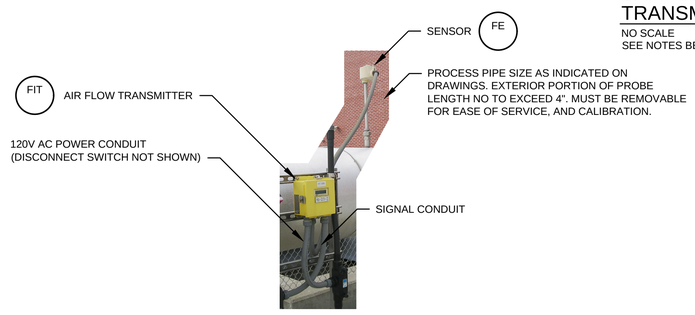

DISSOLVED OXYGEN PROBE/TRANSMITTER DETAIL (SAMPLE PHOTO)

NO SCALE
SEE NOTES BELOW FOR WORK REQ'D.

AE 1 | AIT 1

NOTES: (NEW TRANSMITTERS, AND PROBES)

1. FURNISH A STAINLESS STEEL SUNSHIELD FOR EACH D.O. TRANSMITTER. COORDINATE INSTALLATION WITH ELECTRICAL CONTRACTOR. PROVIDE MOUNTING HARDWARE, AND SECURE TO NEW STAINLESS STEEL STRUT SUPPORT RACK.
2. FURNISH AN AIR COMPRESSOR SYSTEM FOR AUTOMATIC CLEANING OF THE PROBE. THE TRANSMITTER, COMPRESSOR, AND SENSOR(S) ARE TO BE MANUFACTURED BY INSITE "IG" AS NOTED.
3. FOR EACH SENSOR, FURNISH A 2 INCH DIAMETER, 20 FOOT LONG SCHEDULE 80 PVC PIPE. FURNISH MOUNTING HARDWARE FOR THREADING THE SENSOR INTO THE BOTTOM OF THE PIPE. ROUTE SENSOR AND AIR LINES FROM TRANSMITTER AND COMPRESSOR THRU PIPE. FURNISH STAINLESS STEEL BOLTS, NUTS, WASHERS, AND CLAMPS FOR SECURING THE TRANSMITTER AND COMPRESSOR TO THE EXISTING HANDRAIL.
4. THE ABOVE PHOTO IS OF A SAMPLE UNIT. INSTALLATION FOR NEW PROBE, AND TRANSMITTER TO BE SIMILAR.

MAGNETIC FLOW METER DETAIL

NO SCALE.

FE 1-1A | FE 1-2A | FE 2-1A | FE 2-2A | FE 3-1A | FE 3-2A | FE 4-1A | FE 4-2A
FIT 1-1A | FIT 1-2A | FIT 2-1A | FIT 2-2A | FIT 3-1A | FIT 3-2A | FIT 4-1A | FIT 4-2A
} BATTERY "A" AERATION TANKS

FE 1-1B | FE 1-2B | FE 2-1B | FE 2-2B | FE 3-1B | FE 3-2B | FE 4-1B | FE 4-2B | FE 5-1B | FE 5-2B
FIT 1-1B | FIT 1-2B | FIT 2-1B | FIT 2-2B | FIT 3-1B | FIT 3-2B | FIT 4-1B | FIT 4-2B | FIT 5-1B | FIT 5-2B
} BATTERY "B" AERATION TANKS

THERMAL MASS AIR FLOWMETER - SAMPLE DETAIL

FE 1-3A | FE 2-3A | FE 3-3A | FE 4-3A
FIT 1-3A | FIT 2-3A | FIT 3-3A | FIT 4-3A
} BATTERY "A" AERATION TANKS THERMAL MASS FLOWMETER

FE 1-3B | FE 2-3B | FE 3-3B | FE 4-3B | FE 5-3B
FIT 1-3B | FIT 2-3B | FIT 3-3B | FIT 4-3B | FIT 5-3B
} BATTERY "B" AERATION TANKS THERMAL MASS FLOWMETER

TETRA TECH
www.tetratech.com
401 SOUTH WASHINGTON SQUARE, SUITE 100
LANSING, MI, 48933
PHONE: 517.316.3930, FAX: 517.484.8140

MARK	DATE	DESCRIPTION	BY
	5/29/20	ISSUED FOR BIDS	

CITY OF FLINT, MICHIGAN
FLINT WPC AERATION SYSTEM IMPROVEMENTS
INSTRUMENTATION DETAILS

PROJ:	200-156238-19001
DESN:	GCJ
DRWN:	JLS
CHKD:	MSJ/WAP

I-400

Copyright: Tetra Tech

Bar Measures 1 inch, otherwise drawing not to scale

5/27/2020 11:22:50 AM - \\TTSO73FS1\PROJECTS\ER\156238\200-156238-19001\CAD\SHEETFILES\EI-400_I-DET.DWG - SHANK, JASON

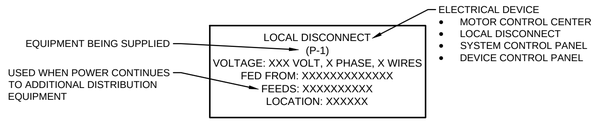

EQUIPMENT NAMEPLATE

NOTE:
1. BLACK LETTERING ON WHITE BACKGROUND

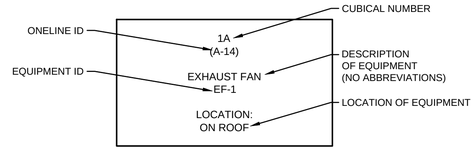

MOTOR CONTROL CENTER CUBICAL NAMEPLATE

NOTE:
1. BLACK LETTERING ON WHITE BACKGROUND

WHITE BACKGROUND BLACK LETTERS

CONTROL PANEL
*
SUPPLY XXX VOLTS: **
Disconnect Current Rating: _____
XXXXXXXXXXXXXXXX
Drawing No. _____ ***
Built By: ****
Equipment Modle No. ****
Equipment Serial No. ****
Contract ****
Date of Manfacture Machine ****

PANEL TAG

NOTE:
1. * = PANEL NAME
2. ** = MCC & BUCKET OR LIGHTING PANEL & CIRCUIT NUMBER
3. *** = DRAWING NUMBER
4. **** = MANUFACTURER, MODEL #, SERIAL #, CONTACT INFO. & DATE.

YELLOW BACKGROUND
BLACK LETTERS

DANGER

YELLOW WIRING
IS NOT
DE-ENERGIAED
BY DISCONNECT

AUTHORIZED
PERSONNEL ONLY
ALLOWED TO ENTER

YELLOW WIRING PANEL TAG

NOTE:
1. TO BE USED WHEN PANEL HAS FOREIGN POWER (CIRCUITS THAT DO NOT DE-ENERGIZE WHEN DISCONNECT OF MAIN CIRCUIT BREAKER IS TURNED OFF). EXAMPLE IS WHEN THE MCC POWERS THE START CONTACT TO A PLC PANEL.

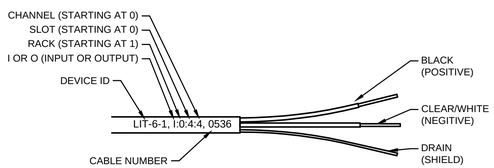

TWO CONDUCTOR CABLE

NOTE:
1. BLACK LETTERING ON WHITE BACKGROUND

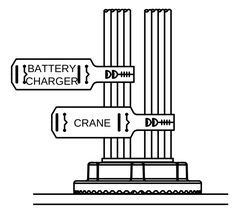

WIRE/CABLE BUNDLE TAG

NOTE:
1. BLACK LETTERING ON WHITE BACKGROUND (POWER)
2. BLACK LETTERING ON YELLOW BACKGROUND (SIGNAL)
3. BUNDLE AND LABEL WIRES/CABLES GOING TO A COMMON PANEL/EQUIPMENT/DEVICE
4. LABEL IN PANELS, MCC, MANHOLES, HAND HOLES, AND BOXES OVER 8 CUBIC FEET.

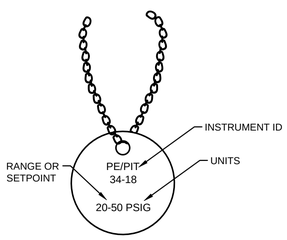

INSTRUMENT TAG

NOTE:
1. STAINLESS STEEL TAG
2. STAINLESS STEEL CHAIN
3. BLACK LETTERING
4. INSTALL TAG ON ELEMENTS AND INSTRUMENTS.

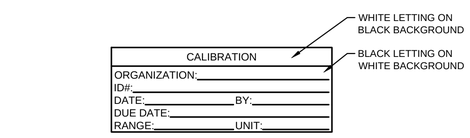

INSTRUMENT CALIBRATION

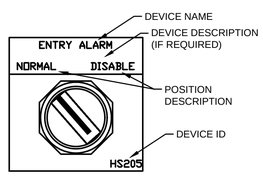

PANEL TAG
PUSH BUTTON/SWITCH

NOTE:
1. BLACK LETTERING ON WHITE BACKGROUND

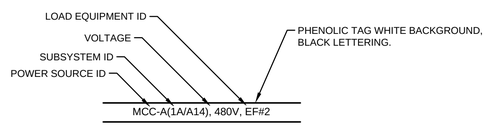

FEEDER & BRANCH CIRCUIT RACEWAY LABELS

NOTE:
1. IN ACCESSIBLE CEILING SPACES AND EXPOSED IN UNFINISHED AREAS, LABEL CONDUIT WITH PANEL AND CIRCUIT NUMBERS OF CONDUCTORS ROUTED THROUGH THE CONDUIT. LABEL CONDUIT AT WALL PENETRATIONS AND CONNECTIONS TO ALL PANELS, JUNCTION BOXES, AND EQUIPMENT SERVED.

TETRA TECH
www.tetratech.com
401 SOUTH WASHINGTON SQUARE, SUITE 100
LANSING, MI, 48933
PHONE: 517.316.3930, FAX: 517.484.8140

MARK	DATE	DESCRIPTION	BY
	5/29/20	ISSUED FOR BIDS	

CITY OF FLINT, MICHIGAN
FLINT WPC AERATION SYSTEM IMPROVEMENTS
INSTRUMENTATION DETAILS

PROJ:	200-156238-19001
DESN:	GCJ
DRWN:	JLS
CHKD:	MSJ/WAP

I-401

Copyright: Tetra Tech

Bar Measures 1 inch, otherwise drawing not to scale

5/26/2020 12:49:55 PM - \\TTSO73FS1\PROJECTS\ER\156238\200-156238-19001\CAD\SHEETFILES\EI-401_I-DET_I.DWG - SHANK, JASON