CITY OF FLINT

GENESEE COUNTY, MICHIGAN
CONSTRUCTION PLANS FOR

WASTE UNLOADING STATION PROJECT

COF1076-01F

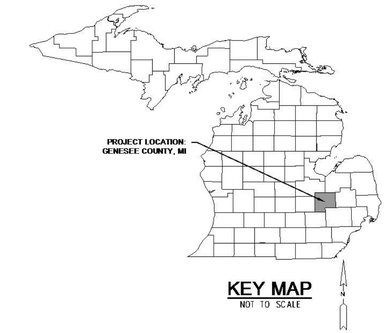

DRAWING INDEX

SHEET NO	DESCRIPTION
GENERAL	
G-001	COVER SHEET
CIVIL	
C-001	GENERAL CIVIL NOTES
C-102	CIVIL DEMOLITION PLAN
C-103	CIVIL SITE PLAN
C-104	CIVIL YARD PIPING PLAN
C-106	PROPOSED WASTE UNLOADING LINE PIPE PROFILE
C-107	PROPOSED DRAIN PIPE PROFILE
C-501	CIVIL DETAILS
C-502	CIVIL DETAILS
STRUCTURAL	
S-100	STRUCTURAL GENERAL NOTES & TYP. DETAILS
S-101	WASTE UNLOADING STATION - TYPICAL DETAILS
S-102	WASTE UNLOADING STATION - PLANS
S-103	WASTE UNLOADING STATION - ROOF PLAN AND DETAILS
S-104	WASTE UNLOADING STATION - SECTIONS
S-105	WASTE UNLOADING STATION - DETAILS
ARCHITECTURAL	
A-001	NOTES, SCHEDULES, AND DETAILS
A-101	FLOOR AND ROOF PLANS
A-201	ELEVATIONS
A-301	BUILDING AND WALL SECTIONS
A-302	BUILDING AND WALL SECTIONS
A-501	DETAILS
PLUMBING	
P-001	PLUMBING GENERAL NOTES, SYMBOLS AND ABBREVIATIONS
P-101	PLUMBING PLAN
P-601	PLUMBING SCHEMATIC, SCHEDULES, AND DETAILS
PROCESS	
D-001	PROCESS SYMBOLS AND ABBREVIATIONS
D-101	WASTE UNLOADING BUILDING AND PUMP STATION PLANS
D-102	DIGESTER BUILDING FLOOR PLAN
D-301	WASTE UNLOADING BUILDING SECTIONS
D-302	PUMP STATION AND VALVE VAULT SECTIONS AND DETAILS
D-303	DIGESTER BUILDING SECTIONS AND DETAILS
D-401	PUMP STATION ENLARGED PLANS
D-501	DETAILS AND SCHEDULES
D-904	3D REPRESENTATIONS
MECHANICAL	
M-001	HVAC GENERAL NOTES, SYMBOLS, AND ABBREVIATIONS
M-101	HVAC PLAN
M-301	HVAC SECTIONS
ELECTRICAL	
E-001	ELECTRICAL SYMBOLS AND ABBREVIATIONS
E-002	GENERAL NOTES AND ABBREVIATIONS
E-101	ELECTRICAL SITE PLAN
E-102	WASTE UNLOADING STATION GROUNDING PLAN
E-103	WASTE UNLOADING STATION LIGHTING PLAN
E-104	WASTE UNLOADING STATION ELECTRICAL PLAN
E-105	DIGESTER BUILDING ELECTRICAL PLAN
E-501	LIGHTING DETAILS
E-502	POWER DETAILS
E-601	PANEL SCHEDULES
E-602	POWER WIRING DIAGRAMS

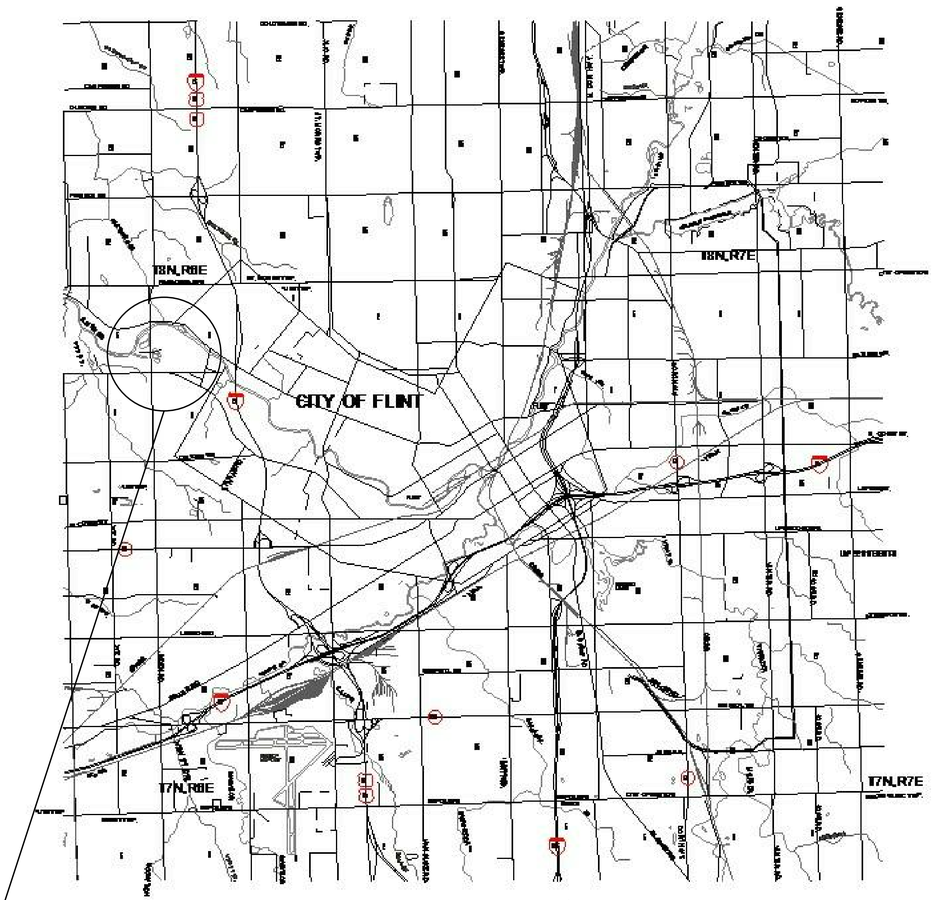

CITY OF FLINT WATER
POLLUTION CONTROL FACILITY
PROJECT LOCATION:
G-4652 BEECHER RD
FLINT, MI 48532

LOCATION MAP

SCALE: NONE
CITY OF FLINT
GENESEE COUNTY, MI
SECTION 4, T7N, R6E

N

UTILITIES & MUNICIPALITIES

TELEPHONE AT&T ENGINEERING 54 NORTH MILL STREET, P.O. BOX 32 PONTIAC, MICHIGAN 48342 CONTACT: JEFF HEATH PHONE: 248.975.4588	CITY OF FLINT 702 WEST 12TH STREET TRANSPORTATION BUILDING FLINT, MICHIGAN 48502 CONTACT: JOHN DALY PHONE: 810.766.7343
CABLE TV COMCAST CABLEVISION 6095 WALL STREET STERLING HEIGHTS, MICHIGAN 48312 CONTACT: TOM DICKINSON PHONE: 586.883.7412	CITY OF FLINT WATER SERVICE CENTER 3310 EAST COURT STREET FLINT, MICHIGAN 48506 CONTACT: PHONE: 810.766.7202
ELECTRIC CONSUMERS ENERGY - ELECTRIC 3201 EAST COURT STREET FLINT, MICHIGAN 48501 CONTACT: MARCEY CONN PHONE: 810.760.3506	CITY OF FLINT ENGINEERING 702 WEST 12TH STREET FLINT, MICHIGAN 48502 CONTACT: MARK ADAS PHONE: 810.766.7135
GAS CONSUMERS ENERGY 3201 EAST COURT STREET FLINT, MICHIGAN 48501 CONTACT: SALVATORE DELISI PHONE: 810.760.3486	SOIL EROSION & SEDIMENTATION CONTROL GCDC-WWS G-4610 BEECHER ROAD FLINT, MICHIGAN 48532 CONTACT: MARK STEPHENS PHONE: 810.732.7870

2023.06.14 ISSUED FOR BID

COVER SHEET

JOB NO.	SHEET
COF1076-01F	G-001

HRC
HUBBELL, ROTH & CLARK, INC
CONSULTING ENGINEERS SINCE 1915
555 HULET DRIVE, BLOOMFIELD HILLS, MICH.
P.O. BOX 824 48303 - 0824
PHONE: (248) 454-6300
FAX (1st. Floor): (248) 454-6312
FAX (2nd. Floor): (248) 338-2592
WEB SITE: http:// www.hrc-engr.com

WADE TRIM
555 South Saginaw Street, Suite 201
Flint, MI 48502
810.235.2555 / 800.841.0342
GANK:WADETRIM
www.wadetrim.com

CITY of FLINT 1855 MICHIGAN

PREPARED UNDER THE SUPERVISION OF:

STATE OF MICHIGAN
Trevor S. Wagenmaker
ENGINEER
No. 6201040131
LICENSED PROFESSIONAL ENGINEER

811
Know what's below.
Call before you dig.

PLOTTED: 6/23/2023 9:40:04 AM

BIM 360://COF1076-7-WPCF/WU_WT_G_R21.rvt

GENERAL NOTES

1. LOCATION OF UTILITIES OR OTHER STRUCTURES SHOWN ON THE PLANS ARE TAKEN FROM UTILITY COMPANY OR OTHER RECORDS BELIEVED TO BE RELIABLE. THE OWNER AND ENGINEER ARE NOT RESPONSIBLE FOR ANY OMISSIONS OR VARIATIONS IN THE LOCATION OF THE UTILITIES ENCOUNTERED IN THE WORK.
2. IT IS THE RESPONSIBILITY OF THE CONTRACTOR TO MAINTAIN THE INTEGRITY OF EXISTING UTILITIES AT ALL TIMES. ALL UTILITIES INCLUDING UTILITY POLES, IN THE VICINITY OF CONSTRUCTION SHALL BE PROTECTED BY BRACING, SUPPORTING, BY THE USE OF TRENCH BOXES OR OTHER ACCEPTABLE MEANS AS DETERMINED BY THE OWNER OF THE UTILITY. ALL COSTS FOR PROTECTION OF UTILITIES SHALL BE INCIDENTAL TO THE PROJECT.
3. ALL UTILITIES, MAINS, SERVICES, EDGE DRAINS, OIL LINES, OR OTHER SIMILAR ITEMS DAMAGED BY THE CONTRACTOR DURING CONSTRUCTION SHALL BE REPAIRED OR REPLACED BY THE CONTRACTOR TO THE SATISFACTION OF THE CITY OF FLINT OR IN A MANNER ACCEPTABLE TO THE CITY OF FLINT. ALL COSTS FOR REPAIR OR REPLACEMENT SHALL BE THE CONTRACTOR'S RESPONSIBILITY AND INCIDENTAL TO THE PROJECT.
4. THE CONTRACTOR SHALL LIMIT CONSTRUCTION TRAFFIC AND EQUIPMENT TO THE AREA DIRECTLY UNDER CONSTRUCTION TO PREVENT DAMAGE TO ANY EXISTING IMPROVEMENTS, AND SHALL PREVENT THE SPREAD OF CONSTRUCTION DEBRIS OUTSIDE OF THE CONSTRUCTION AREA.
5. ALL TREES, SHRUBS AND LANDSCAPING NOT DESIGNATED TO BE REMOVED SHALL BE PROTECTED DURING CONSTRUCTION. ALL TREES, SHRUBS OR LANDSCAPING DAMAGED IN ANY WAY BY THE CONTRACTOR (INCLUDING DAMAGING ROOTS) SHALL BE REPLACED WITH LIKE SPECIES AND SIZE AT THE EXPENSE OF THE CONTRACTOR.
6. THE CONTRACTOR SHALL HAVE AN OPERATING VACUUM TYPE PICKUP SWEEPER ON THE JOB AT ALL TIMES. THE PAVEMENT SHALL BE SWEPT A MINIMUM OF TWICE A DAY OR MORE FREQUENTLY AS NECESSARY. THE CONTRACTOR SHALL ALSO COMPLY WITH LOCAL AGENCY FUGITIVE DUST ORDINANCE.
7. THE CONTRACTOR SHALL MAINTAIN EXISTING STORM WATER DRAINAGE AT ALL TIMES DURING THE WORK. ALL COSTS FOR MAINTAINING DRAINAGE SHALL BE INCIDENTAL TO THE PROJECT EXCEPT AS MAY BE OTHERWISE PROVIDED FOR IN THE PROPOSAL.
8. RESTORATION SHALL BE WITH 4-INCHES OF TOPSOIL.THE CONTRACTOR SHALL RESTORE ALL AREAS DISTURBED BY THE CONTRACTORS OPERATION. RESTORATION OUTSIDE THE AREAS INDICATED SHALL BE AT THE EXPENSE OF THE CONTRACTOR. CONTRACTOR SHALL BE RESPONSIBLE FOR PROVIDING AN ESTABLISHED TURF ACCEPTABLE TO THE ENGINEER.
9. PROJECT DATUM INFORMATION IS IN NAVD88.

SOIL EROSION AND SEDIMENTATION CONTROL (SESC) NOTES

1. ALL SOIL EROSION AND SEDIMENTATION CONTROL SHALL BE IN ACCORDANCE WITH THE REQUIREMENTS OF WAYNE COUNTY DEPARTMENT OF ENVIRONMENT, LAND RESOURCE MANAGEMENT DIVISION. CONTRACTOR SHALL PAY ALL FEES, AND POST ANY BONDS REQUIRED TO OBTAIN A PERMIT FROM WAYNE COUNTY DEPARTMENT OF ENVIRONMENT, LAND RESOURCE MANAGEMENT DIVISION.
2. ALL TRUCKS LEAVING THE CONSTRUCTION SITE SHALL PASS THROUGH A TEMPORARY GRAVEL CONSTRUCTION ENTRANCE/EXIT DRIVE TO REMOVE DIRT AND SEDIMENT. ANY DIRT AND ACCUMULATED SEDIMENT ON ROADS AND STREETS IN THE VICINITY OF THE PROJECT OR OUTSIDE OF THE PROJECT VICINITY, BUT ATTRIBUTABLE TO THE PROJECT SHALL BE SWEPT CLEAN AT LEAST TWICE DAILY WITH A VACUUM TYPE PICKUP BROOM. ALL MUD, DIRT AND DEBRIS TRACKED OR SPILLED ONTO THE EXISTING ROADS SHALL BE PROMPTLY REMOVED BY THE CONTRACTOR.
3. STABILIZE SLOPES STEEPER THAN 1 ON 4, CHANNELS AND SWALES WITHIN 7 DAYS OF EARTH DISTURBANCE. INSTALL PERMANENT STABILIZATION MEASURES WITHIN 5 DAYS OF FINAL GRADING.
4. DURING STORM SEWER INSTALLATION, ALL NEWLY CONSTRUCTED DRAINAGE STRUCTURES SHALL BE PROTECTED WITH A DRAINAGE STRUCTURE FILTER. THIS WORK WILL BE INCLUDED IN THE DRAINAGE STRUCTURE COST.
5. INSTALL TOPSOIL, SEED AND MULCH / TOPSOIL AND SOD HYDROSEED ON DISTURBED RIGHT-OF-WAY WITHIN 5 DAYS OF COMPLETING UTILITY INSTALLATION.
6. PLACE RIPRAP WITHIN 24 HOURS OF PLACING CULVERTS, HEADWALLS OR OTHER DRAINAGE INLETS/OUTLETS.
7. CLEAN ALL ACCUMULATED SEDIMENT FROM CATCH BASINS, SEWERS AND PAVEMENT AREAS AS REQUIRED FOLLOWING COMPLETION OF CONSTRUCTION.
8. IMMEDIATELY REMOVE ALL EXCESS EXCAVATED MATERIAL FROM SITE OR STABLIZE SOIL STOCKPILES SO EROSION AND SEDIMENTATION DOES NOT OCCUR.
9. SHOULD IT BE NECESSARY FOR THE CONTRACTOR TO DO ANY DEWATERING DURING THE COURSE OF CONSTRUCTION, THE CONTRACTOR SHALL FILTER ALL DISCHARGE THROUGH A DISCHARGE FILTER BAG OR OTHER SEDIMENT CONTROL DEVICE THAT WILL FILTER ALL DISCHARGE WATER. NO DEWATERING DISCHARGE SHALL BE ALLOWED TO FLOW UNFILTERED FROM THE CONSTRUCTION SITE OR INTO GLWA STORM/SANITARY SEWERS.
10. THE CONTRACTOR SHALL CONTROL THE DUST CREATED ON THE CONSTRUCTION SITE AT ALL TIMES. DUST CONTROL SHALL BE ACCOMPLISHED BY THE APPLICATION OF DUST CONTROL MATERIALS AND APPLICATION METHODS ACCEPTABLE TO THE AGENCY HAVING JURISDICTION. ALL COSTS FOR DUST CONTROL SHALL BE INCIDENTAL TO THE PROJECT.
11. ALL SOIL EROSION AND SEDIMENTATION CONTROL (SESC) DEVICES SHALL BE INSTALLED PRIOR TO CONTRACTOR BEGINNING ANY WORK OR IMMEDIATELY FOLLOWING THE PHASE OF CONSTRUCTIONALLOWING OR REQUIRING (SESC) DEVICES. ALL SESC DEVICES SHALL BE MAINTAINED IN AN EFFECTIVE, FUNCTIONING CONDITION AT ALL TIMES DURING THE COURSE OF THE WORK. ALL TEMPORARY SESC DEVICES SHALL BE REMOVED AND THE AREA RESTORED AFTER THE PERMANENT SESC MEASURES ARE INSTALLED AND FUNCTIONING.
12. SHOULD THE SOIL EROSION AND SEDIMENTATION CONTROL REQUIREMENTS OR THE DUST CONTROL REQUIREMENTS BE NEGLECTED, THE OWNER OR AGENCY HAVING JURISDICTION CAN REQUIRE THE CONTRACTOR TO CEASE ALL CONSTRUCTION OPERATIONS UNTIL THE REQUIREMENTS ARE SATISFACTORILY MET.
13. SOIL EROSION AND SEDIMENTATION CONTROL SHALL BE IN ACCORDANCE WITH PART 91 OF ACT 451 OF PA 1994.
14. ALL SOIL EROSION CONTROL MEASURES SHALL BE CHECKED A MINIMUM OF ONCE PER WEEK AND WITHIN A MINIMUM OF 24 HOURS AFTER EVERY 0.5" OF RAINFALL. ANY SOIL EROSION CONTROL MEASURES DAMAGED OR RENDERED INEFFECTIVE SHALL BE IMMEDIATELY REPAIRED OR REMOVED AND REPLACED AT NO ADDITIONAL COST.
15. AS SOON AS POSSIBLE, COMPLETE FINAL GRADING AND PLACING OF PERMANENT SOIL EROSION CONTROL DEVICES. AFTER ESTABLISHMENT OF PERMANENT VEGETATION, REMOVE ALL TEMPORARY SOIL EROSION CONTROL MEASURES.

PAVING CONSTRUCTION NOTES

1. PAVEMENT REMOVAL AND REPLACEMENT SHALL BE PAID FOR THE AREA SHOWN ON THE PLANS OR AS DETERMINED BY THE ENGINEER. PAVEMENT REMOVAL THAT THE CONTRACTOR CAUSES TO BE REMOVED OUTSIDE THE AREA SPECIFIED SHALL BE REPLACED AT THE CONTRACTOR'S EXPENSE.
2. THE CONTRACTOR SHALL SAWCUT AND REMOVE THE EXISTING PAVEMENT CLEANLY WHERE PROPOSED PAVEMENT MEETS EXISTING PAVEMENT. SAWCUTTING SHALL BE INCIDENTAL TO THE PROJECT.
3. THE CONTRACTOR SHALL USE PAVEMENT BREAKING AND REMOVAL EQUIPMENT THAT WILL NOT DAMAGE EXISTING STRUCTURES AND UTILITIES. THE CONTRACTOR SHALL IMMEDIATELY CEASE PAVEMENT BREAKING OR REMOVAL OF PAVEMENT, WITH THE OFFENDING EQUIPMENT, IF COLLATERAL DAMAGE BECOMES EVIDENT.
4. WHENEVER ANY AGGREGATE BASE COURSE OR SUBBASE BECOMES CONTAMINATED BASED ON OBSERVATION AND LAB TESTING, THE CONTRACTOR SHALL REMOVE AND REPLACE THE CONTAMINATED MATERIAL AT THE CONTRACTOR'S EXPENSE.
5. CONTRACTOR SHALL PROTECT ANY EXISTING UTILITY OR STRUCTURES FRAMES AND COVERS REMAINING IN PLACE. ANY UTILITY FRAMES AND COVERS WHICH ARE DAMAGED SHALL BE REMOVED AND REPLACED AT THE CONTRACTOR'S EXPENSE.
6. SIDEWALK SHALL BE 4-INCH THICKNESS OF CONCRETE, SIDEWALK RAMPS SHALL BE 4-INCH THICKNESS OF CONCRETE.
7. THE EDGE OF THE EXISTING PAVEMENT SHALL BE CLEANED OF EARTH AND OTHER FOREIGN MATERIAL WITH A WIRE BROOM BEFORE ADJACENT PAVEMENT IS PLACED.
8. CONTRACTOR TO ADJUST ALL EXISTING AND PROPOSED MANHOLE, UTILITY, AND STRUCTURE FRAME AND COVERS TO FINAL GRADE.

PLOTTED

REV#	DATE	DESCRIPTION	BY

WADE TRIM
555 South Saginaw Street, Suite 201
Flint, MI 48502
810.235.2555 / 800.841.0342
www.wadetrim.com

HRC
HUBBELL, ROTH & CLARK, INC
CONSULTING ENGINEERS SINCE 1915
655 WEST BIRDS BLOOMFIELD HILLS, MICH. 48304
P.O. BOX 824 48303 - 0824
PHONE: (248) 454-6300
FAX (Tel. Fiber): (248) 454-6312
FAX (Dial. Fiber): (248) 338-2592
WEB SITE: http:// www.hrc-eng.com

CITY OF FLINT
WASTE UNLOADING PROJECT

CIVIL GENERAL NOTES

ISSUED FOR:	DATE:	BY:

JOB NO. COF1076.O1F

SHEET C-001

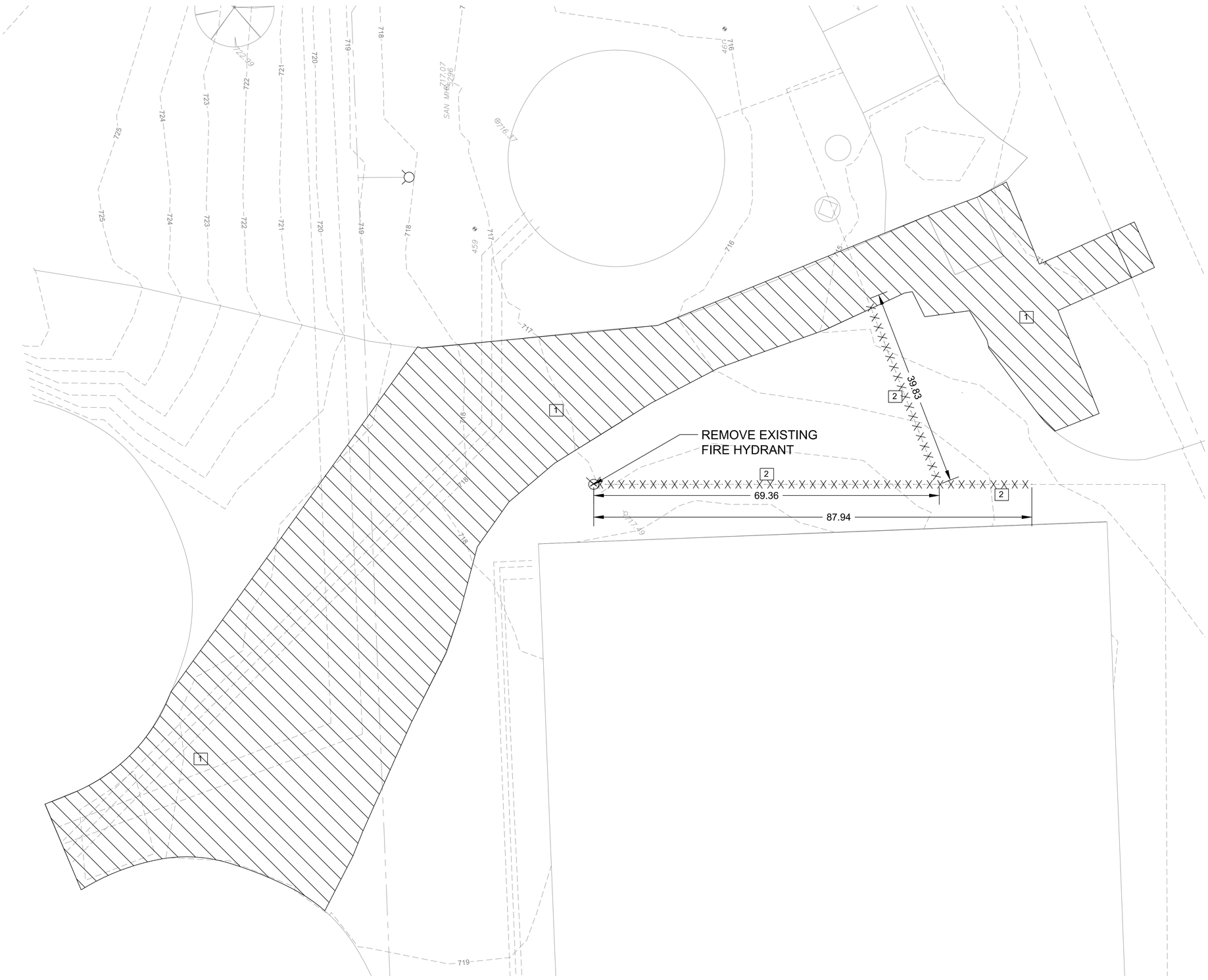

1"=20'-0"

20 10 0 20'

X DEMOLITION NOTES

1. REMOVE ASPHALT PAVEMENT
   ALL SAWCUTS SHALL BE FULL DEPTH.
2. REMOVE 14" EFFLUENT WATER LINE.

LEGEND

REMOVE ASPHALT PAVEMENT

REMOVE PIPE

REV#	DATE	DESCRIPTION	BY

CITY of FLINT MICHIGAN

WADE TRIM
555 South Saginaw Street, Suite 201
Flint, MI 48502
810.235.2555 / 800.841.0342
www.wadetrim.com

HRC
HUBBELL, ROTH & CLARK, INC
CONSULTING ENGINEERS SINCE 1915
555 HULET DRIVE, BLOOMFIELD HILLS, MICH. P.O. BOX 824 48303 - 0824
PHONE: (248) 454-6300
FAX (Int. Fmnr): (248) 454-6312
FAX (Dial. Fmnr): (248) 338-2592
WEB SITE: http:// www.hrc-engr.com

CITY OF FLINT
WASTE UNLOADING PROJECT

CIVIL DEMOLITION PLAN

ISSUED FOR:	DATE:	BY:

JOB NO. COF1076.O1F

SHEET C-102

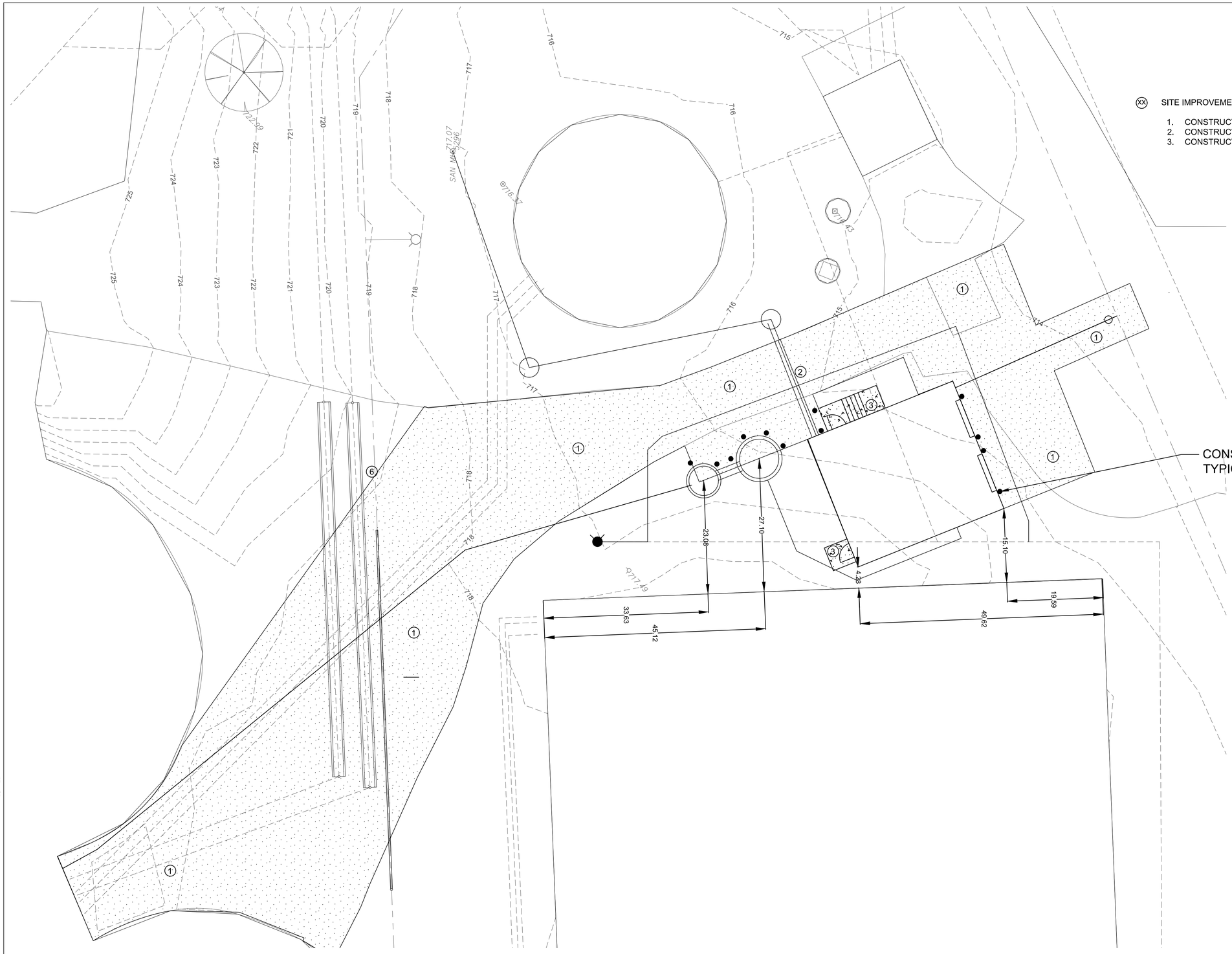

XX SITE IMPROVEMENT NOTES

1. CONSTRUCT ASPHALT PAVEMENT SEE DETAIL SHEET xxx
2. CONSTRUCT 12" TRENCH DRAIN FOR SPILL PROTECTION
3. CONSTRUCT 4" CONCRETE SIDEWALK

REV#	DATE	DESCRIPTION	BY

CITY of FLINT MICHIGAN

WADE TRIM
555 South Saginaw Street, Suite 201
Flint, MI 48502
810.235.2555 / 800.841.0342
www.wadetrim.com

HRC
HUBBELL, ROTH & CLARK, INC
CONSULTING ENGINEERS SINCE 1915
555 WALT WHITE BLOOMFIELD HILLS, MICH.
P.O. BOX 824 48303 - 0824
PHONE: (248) 454-6300
FAX (1st. Floor): (248) 454-6312
FAX (2nd. Floor): (248) 338-2592
WEB SITE: http:// www.hrc-engr.com

CITY OF FLINT
WASTE UNLOADING PROJECT

CIVIL SITE PLAN

ISSUED FOR:	DATE:	BY:

JOB NO.
COF1076.O1F

SHEET
C-103

PLOTTED

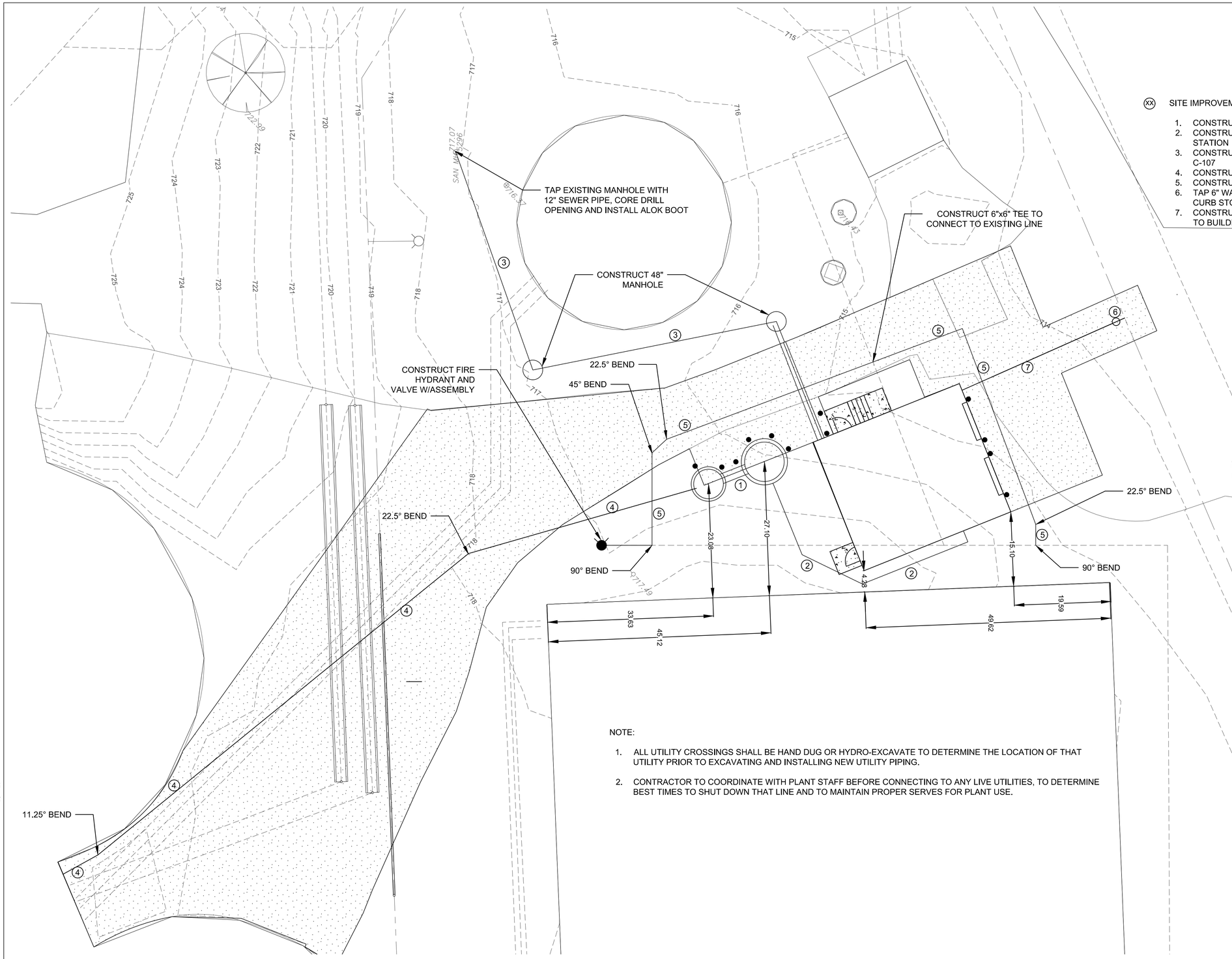

XX SITE IMPROVEMENT NOTES

1. CONSTRUCT SUBMERSIBLE PUMPING STATION AND VALVE VAULT
2. CONSTRUCT 12" DRAIN LINE, MAINTAIN POSITIVE DRAINAGE TO PUMP STATION
3. CONSTRUCT 8" SEWER LINE WITH MANHOLES, SEE PROFILE SHEET C-107
4. CONSTRUCT 8" WASTE UNLOADING LINE, SEE PROFILE SHEET C-106
5. CONSTRUCT 6" EFFLUENT WATER LINE, MAINTAIN 5' COVER
6. TAP 6" WATER LINE WITH 3/4" COPPER WATER LINE AND INSTALL CURB STOP.
7. CONSTRUCT 3/4" COPPER WATER LINE MAINTAIN 5' COVER, CONNECT TO BUILDING SEE MECHANICAL PLANS

NOTE:

1. ALL UTILITY CROSSINGS SHALL BE HAND DUG OR HYDRO-EXCAVATE TO DETERMINE THE LOCATION OF THAT UTILITY PRIOR TO EXCAVATING AND INSTALLING NEW UTILITY PIPING.
2. CONTRACTOR TO COORDINATE WITH PLANT STAFF BEFORE CONNECTING TO ANY LIVE UTILITIES, TO DETERMINE BEST TIMES TO SHUT DOWN THAT LINE AND TO MAINTAIN PROPER SERVES FOR PLANT USE.

REV#	DATE	DESCRIPTION	BY

CITY of FLINT MICHIGAN

WADE TRIM
555 South Saginaw Street, Suite 201
Flint, MI 48502
810.235.2555 / 800.841.0342
www.wadetrim.com

HRC
HUBBELL, ROTH & CLARK, INC
CONSULTING ENGINEERS SINCE 1915
555 HULET DRIVE
BLOOMFIELD HILLS, MICH.
P.O. BOX 824
48303 - 0824
PHONE: (248) 454-6300
FAX (1st. Floor): (248) 454-6312
FAX (2nd. Floor): (248) 338-3592
WEB SITE: http:// www.hrc-eng.com

CITY OF FLINT
WASTE UNLOADING PROJECT

CIVIL YARD PIPING PLAN

ISSUED FOR:	DATE:	BY:

JOB NO. COF1076.O1F

SHEET C-104

PLOTTED

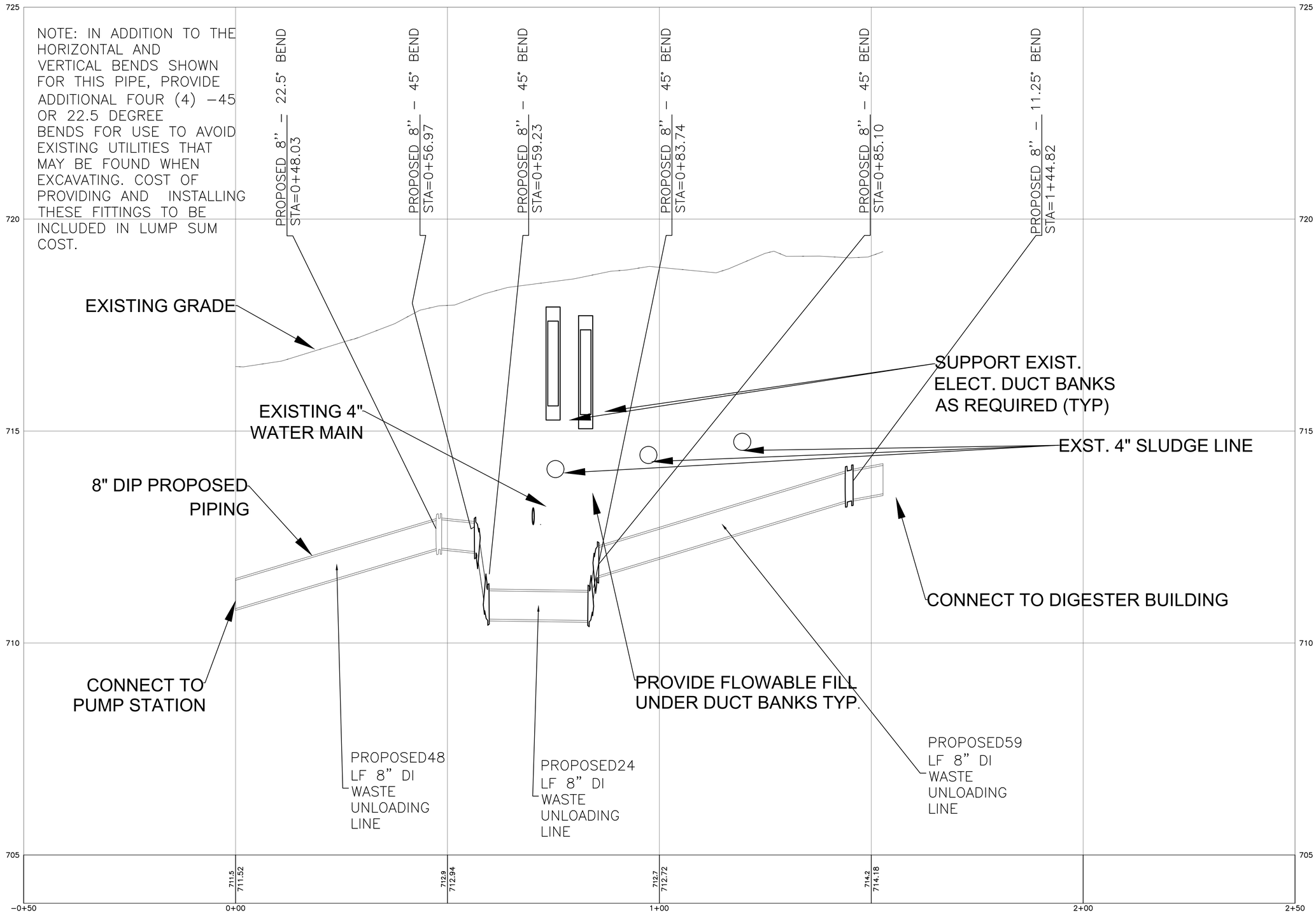

REV#	DATE	DESCRIPTION	BY

CITY of FLINT MICHIGAN

WADE TRIM
555 South Saginaw Street, Suite 201
Flint, MI 48502
810.235.2555 / 800.841.0342
www.wadetrim.com

HRC
HUBBELL, ROTH & CLARK, INC
CONSULTING ENGINEERS SINCE 1915
555 HULET DRIVE, BLOOMFIELD HILLS, MICH.
P.O. BOX 824, 48303 - 0824
PHONE: (248) 454-6300
FAX (Tel. Fleet): (248) 454-6312
FAX (Dial. Fleet): (248) 358-3592
WEB SITE: http:// www.hrc-engr.com

CITY OF FLINT
WASTE UNLOADING PROJECT
PROPOSED WASTE UNLOADING LINE PIPE PROFILE

ISSUED FOR:	DATE:	BY:
BIDS	2023.06.24	TSW

JOB NO. COF1076.O1F

SHEET C-106

PLOTTED

Wade Trim Form Inc

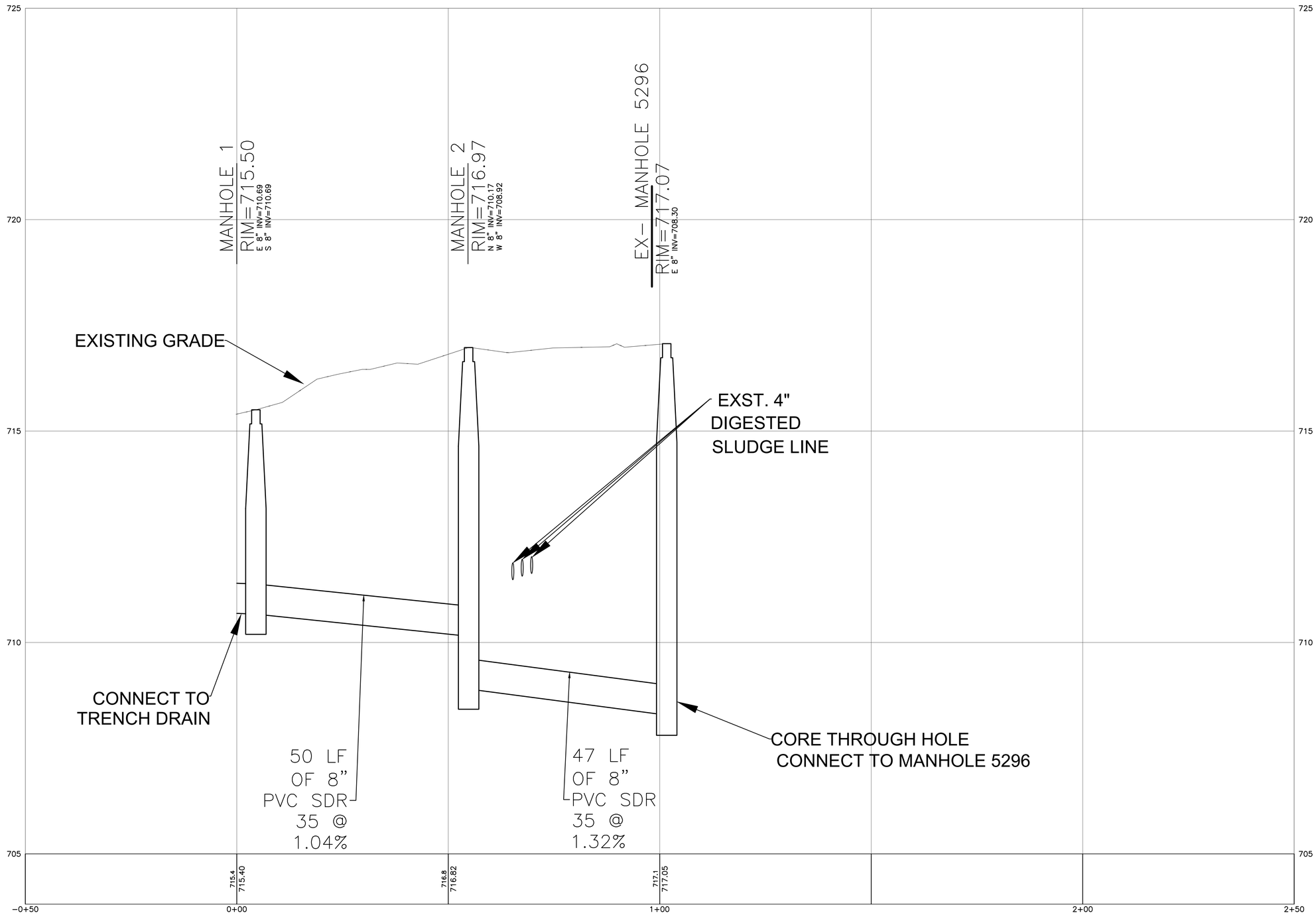

PLOTTED

REV#	DATE	DESCRIPTION	BY

CITY of FLINT MICHIGAN

WADE TRIM
555 South Saginaw Street, Suite 201
Flint, MI 48502
810.235.2555 / 800.841.0342
www.wadetrim.com

HRC
HUBBELL, ROTH & CLARK, INC
CONSULTING ENGINEERS SINCE 1915
550 WALT DRIVE, BLOOMFIELD HILLS, MICH. P.O. BOX 824 48303 - 0824
PHONE: (248) 454-6300
FAX (Tel. Fiber): (248) 454-6312
FAX (Dial. Fiber): (248) 338-2302
WEB SITE: http:// www.hrc-eng.com

CITY OF FLINT
WASTE UNLOADING PROJECT
PROPOSED DRAIN PIPE PROFILE

ISSUED FOR:	DATE:	BY:
BIDS	2023.06.24	TSW

JOB NO. COF1076.O1F

SHEET C-107

Wade Trim Drawing Sheet

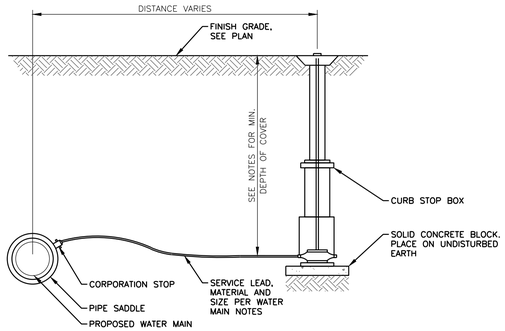

WATER SERVICE DETAIL

NOT TO SCALE

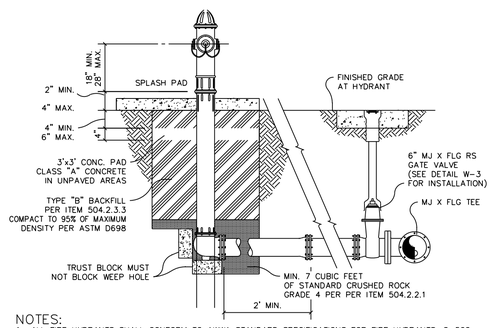

NOTES:

1. ALL FIRE HYDRANTS SHALL CONFORM TO AWWA STANDARD SPECIFICATIONS FOR FIRE HYDRANTS, C-502. FIRE HYDRANTS SHALL HAVE A 5 1/4" MIN. VALVE OPENING AND AND INSIDE BARREL DIAMETER OF APPROXIMATELY 7". ALL HYDRANTS SHALL BE EQUIPPED WITH A BREAKAWAY FLANGE.
2. BURY DEPTH SHALL NOT EXCEED 7-FEET.
3. FIRE HYDRANT SHALL BE PLACED ON THE EXTENDED LOT LINE WHEN POSSIBLE.
4. FIRE HYDRANT SHALL BE LOCATED A MINIMUM OF 1 FOOT OUTSIDE OF THE AREA BETWEEN THE P.C.'s OF THE CORNER TURNING RADIUS AT THE INTERSECTIONS.
5. ALL BELOW GROUND IRON ASSEMBLIES SHALL BE WRAPPED IN POLYETHYLENE ACCORDING TO AWWA C105.
6. BOLLARDS SHALL BE PLACED AROUND FIRE HYDRANT WHERE CURBS ARE NOT POSSIBLE.
7. FIRE HYDRANT SHALL BE AT LEAST 42-INCHES FROM ANY ABOVE GROUND OBSTRUCTIONS, SUCH AS GUARDRAILS, RETAINING WALLS, BOLLARDS, ETC.
8. SPLASH PAD TO BE MIN. 2' WIDE AND EXTEND FROM BACK OF CURB TO THE FIRE HYDRANT.
9. ALL FIRE HYDRANTS SHALL HAVE 5' CLEAR ZONE FREE FROM AND OBSTRUCTIONS OR UTILITY.

FIRE HYDRANT DETAIL

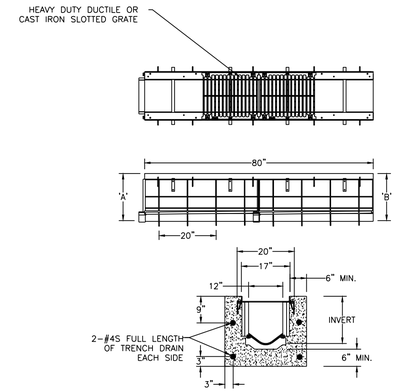

NOTE:

1. MINIMUM SLOPE ON CHANNEL SHALL BE 1%, SEE PLANS FOR INVERT ELEVATION AT DOWN STREAM END.
2. TRENCH DRAIN SHALL BE ZURN Z874-12, ACO S300K OR APPROVED EQUAL
3. SOLID CAPPED END ON UPSTREAM SIDE OF TRENCH DRAIN AND OUTLET CAP TO FIT 6" DRAIN PIPE AT ENTRANCE.
4. END CAP TO FIT 4" DRAIN PIPE ON UPSTREAM SIDE OF TRENCH DRAIN AND OUTLET CAP TO FIT 8" DRAIN PIPE AT LOADING DOCK AREA.

TRENCH DRAIN DETAIL

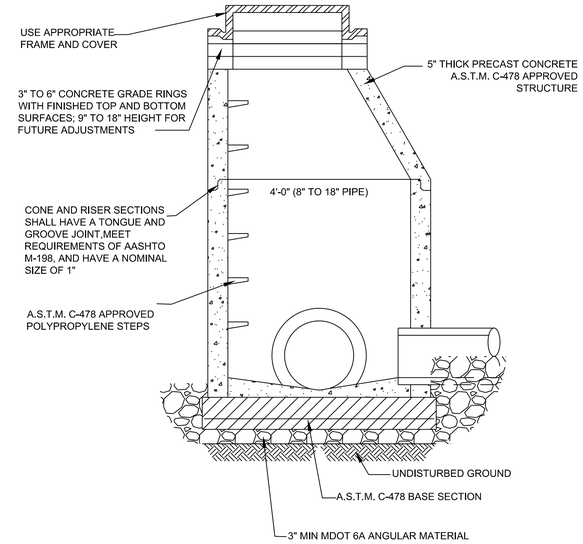

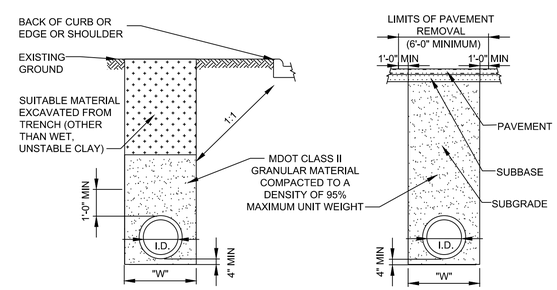

NOTES:

1. WHEN PIPE IS PLACED IN PROPOSED ROADBED AREA, IT SHALL BE BACKFILLED WITH SELECTED EXCAVATION MATERIAL ABOVE FUTURE SUBGRADE TO EXISTING GROUND LINE.

EDGE OF TRENCH WITHIN 3 FEET OF PAVED SURFACE

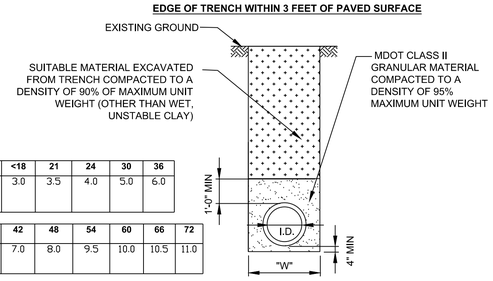

I.D. PIPE SIZE (IN)	<18	21	24	30	36
"W" TRENCH WIDTH (FT)	3.0	3.5	4.0	5.0	6.0

I.D. PIPE SIZE (IN)	42	48	54	60	66	72
"W" TRENCH WIDTH (FT)	7.0	8.0	9.5	10.0	10.5	11.0

TRENCH NOT WITHIN INFLUENCE OF PAVED AREA

PIPE TRENCH CROSS-SECTIONS

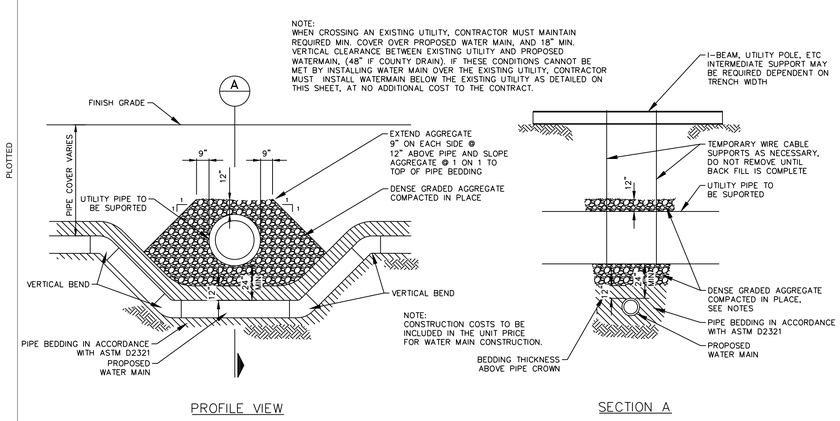

UTILTIY CROSSING AND PIPE SUPPORT DETAIL

NOT TO SCALE

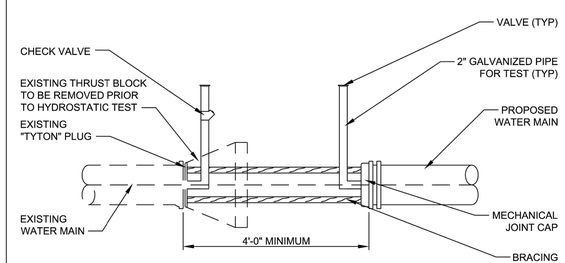

TEMPORARY ARRANGEMENT FOR HYDROSTATIC PRESSURE TEST

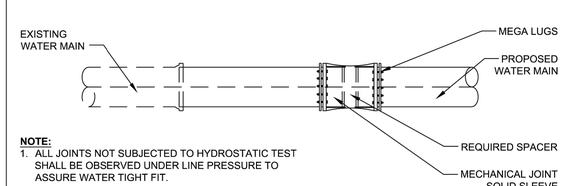

NOTE:

1. ALL JOINTS NOT SUBJECTED TO HYDROSTATIC TEST SHALL BE OBSERVED UNDER LINE PRESSURE TO ASSURE WATER TIGHT FIT.

COMPLETED CONNECTION TO EXISTING WATER MAIN

NOTES.

REV#	DATE	DESCRIPTION	BY

WADE TRIM
555 South Saginaw Street, Suite 201
Flint, MI 48502
810.235.2555 / 800.841.0342
www.wadetrim.com

HRC
HUBBELL, ROTH & CLARK, INC
CONSULTING ENGINEERS SINCE 1915
555 HULET DRIVE, BLOOMFIELD HILLS, MICH. 48302 - 0024
P.O. BOX 824
PHONE: (248) 454-6300
FAX (Tel. Fiber): (248) 454-6312
FAX (Dial. Fiber): (248) 338-2082
WEB SITE: http:// www.hrc-engr.com

CITY OF FLINT
WASTE UNLOADING PROJECT

CIVIL DETAILS

ISSUED FOR: DATE: BY:

JOB NO. COF1076.O1F

SHEET C-501

PLOTTED

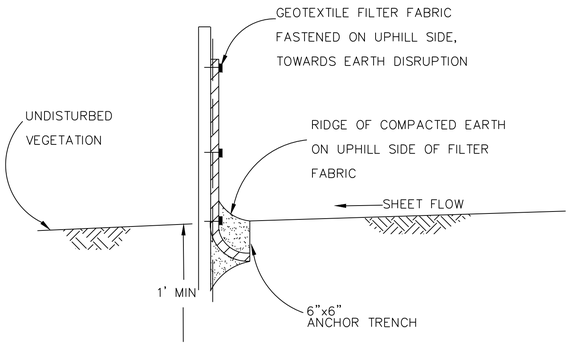

SILT FENCEBOLLARD DETAIL

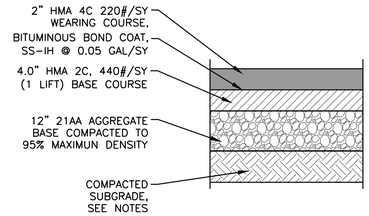

STANDARD HMA PAVEMENT DETAIL

NOT TO SCALE

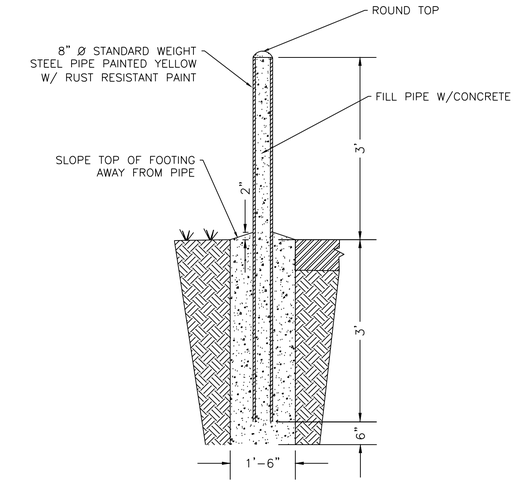

NOTES:
1. SUBMIT PRODUCT DATA AND/OR SHOP DRAWINGS.
2. INSTALL BOLLARDS AS SHOWN ON PLANS. ALL LOCATIONS TO BE FIELD VERIFIED WITH OWNER'S REP. PRIOR TO INSTALLATION. USE CAUTION REGARDING UNDERGROUND UTILITIES.

BOLLARD DETAIL

PIPE RESTRAINT SCHEDULE

GROUND BURIED PRESSURE PIPE – POLYETHYLENE ENCASED DUCTILE IRON PIPE

PIPE DIAMETER	TEES, 90° BENDS	45° BENDS	22-1/2° BENDS	11-1/4° BENDS	DEAD ENDS	REDUCERS (ONE SIZE REDUCTION)*	REDUCERS (TWO SIZE REDUCTION)*
4	13	5	3	1	40	--	--
6	19	8	4	2	58	31	--
8	24	10	5	2	75	30	70
12	34	14	7	3	107	57	116
16	43	18	9	4	139	59	137
20	52	22	10	5	169	59	134
24	61	25	12	6	199	60	132
30	73	30	15	7	242	85	168
36	84	35	17	8	281	84	188

LENGTHS OF PIPE RESTRAINT ARE GIVEN IN FEET.

IF REQUIRED PIPE DIAMETER IS NOT LISTED IN THIS TABLE, THE NEXT LARGEST PIPE DIAMETER SHALL BE USED.

THIS TABLE IS BASED ON A TEST PRESSURE OF 180 PSI (OPERATING PRESSURE PLUS WATER HAMMER. FOR OTHER TEST PRESSURES, ALL VALUES TO BE INCREASED OR DECREASED PROPORTIONALLY.

THE VALUES PROVIDED OF RESTRAINT LENGTH ARE IN EACH DIRECTION FROM THE POINT OF DEFLECTION OR TERMINATION EXCEPT FOR TEES, AT WHICH ONLY THE BRANCH IN THE DIRECTION OF THE STEM.

* SIZE REDUCTION IS BASED UPON THE PIPE DIAMETER SHOWN IN THIS TABLE.

BASED UPON:

INTERNAL PRESSURE:	180
PIPE DEPTH:	5
BEDDING CLASS:	TYPE 4
SOIL TYPE:	GOOD SAND
SAFETY FACTOR:	2

PLOTTED

REV#	DATE	DESCRIPTION	BY

WADE TRIM
555 South Saginaw Street, Suite 201
Flint, MI 48502
810.235.2555 / 800.841.0342
www.wadetrim.com

HRC
HUBBELL, ROTH & CLARK, INC
CONSULTING ENGINEERS SINCE 1915
655 WEST BIRMINGHAM BLOOMFIELD HILLS, MICHIGAN
P.O. BOX 824 48303 - 0824
PHONE: (248) 454-6300
FAX (Tel. Fiber): (248) 454-6312
FAX (Tel. Fiber): (248) 338-2592
WEB SITE: http:// www.hrc-eng.com

CITY OF FLINT
WASTE UNLOADING PROJECT

CIVIL DETAILS

ISSUED FOR:	DATE:	BY:

JOB NO. COF1076.O1F

SHEET C-502

GENERAL NOTES

1. DIMENSIONS AND ELEVATIONS OF EXISTING STRUCTURES ARE BASED ON PREVIOUS CONTRACT DRAWINGS. CONTRACTOR IS RESPONSIBLE FOR VERIFYING W/FIELD MEASUREMENTS ALL DIMENSIONS AND ELEVATIONS FOR FABRICATION AND/OR MODIFICATIONS OR ADDITIONS BEING MADE UNDER THIS CONTRACT. ANY DISCREPANCIES SHALL BE PRESENTED TO THE OWNER AND ANY DESIGN CONFLICTS SHALL BE RESOLVED WITH OWNER PRIOR TO FABRICATIONS OR CONSTRUCTION OF IMPACTED ITEMS.

2. ALL EXISTING DIMENSIONS AND ELEVATIONS SHOWN WITH THE ± SYMBOL, ARE APPROXIMATE AND SHALL BE VERIFIED IN FIELD BY THE CONTRACTOR BEFORE FABRICATION AND CONSTRUCTION.

3. ALL DIMENSIONS OR ELEVATIONS MARKED WITH AN ASTERISK "*" SHALL BE DETERMINED OR VERIFIED WITH EQUIP. MFR. CERTIFIED SHOP DRAWINGS OR FIELD MEASUREMENTS OF EXISTING CONSTRUCTION BEFORE FABRICATION AND CONSTRUCTION.

4. ALL ADHESIVE ANCHORING SYSTEMS FOR POST-INSTALLED ANCHORS AND/OR REINFORCING DOWELS IN CONCRETE OR MASONRY SHALL BE "HIT-HY 200 ADHESIVE ANCHORING SYSTEM" BY HILTI AT SIZE AND SPACING INDICATED ON DRAWINGS.

CODES AND LOADS

1. ALL STRUCTURES SHALL BE DESIGNED IN ACCORDANCE WITH THE FOLLOWING CODES:

   A. CODE REQUIREMENTS FOR ENVIRONMENTAL ENGINEERING CONCRETE STRUCTURES - AMERICAN CONCRETE ASSOCIATION ACI 350 (2006)

2. DESIGN LOADS (GENERAL)
   A. ELEVATED SLAB & SLABS ON GRADE - LIVE LOADS - 300 PSF
   B. ELEVATED PLATFORM LIVE LOADS - 150 PSF
   C. SNOW LOADS, PER ASCE 7-16 (OCCUPANCY CATEGORY III)
      1. GROUND SNOW LOAD - 30 PSF
      2. SNOW EXPOSURE FACTOR - Ce = 0.9
      3. SNOW THERMAL FACTOR - Ct = 1.0
      4. SNOW IMPORTANCE FACTOR - I = 1.1
      5. FLAT ROOF SNOW LOAD - Pf = 21.0 PSF

   D. WIND LOADS
      1. BASIC WIND SPEED (3-SECOND)=120 MPH
      2. WIND EXPOSURE CATEGORY C
      3. HEIGHT AND EXPOSURE FACTOR: 1.4

   E. LATERAL EARTH PRESSURES DRAINED CONDITION
      1. ACTIVE PRESSURE - Pa = 40.0 PSF; Ka = 0.32
      2. AT REST PRESSURE - Po = 60.0 PSF; Ko = 0.48
      3. PASSIVE PRESSURE - Pp = 375 PSF; Kp = 3.12
   F. LATERAL EARTH PRESSURE - UNDRAINED CONDITION
      1. ACTIVE PRESSURE - Pa = 84.0 PSF
      2. AT REST PRESSURE - Po = 94.0 PSF
      3. PASSIVE PRESSURE - Pp = 267 PSF

   G. 100 YEAR FLOOD ELEVATION - GRADE

DEMOLITION

1. THE CONTRACTOR SHALL TAKE ALL NECESSARY MEASURES TO PREVENT DAMAGE TO EXISTING STRUCTURES, WHICH ARE TO REMAIN, DURING DEMOLITION WORK. ALL DAMAGE SHALL BE REPAIRED TO THE COMPLETE SATISFACTION OF THE ENGINEER AT THE CONTRACTOR'S EXPENSE.

2. WHEN REMOVING EXISTING CONCRETE BY CUTTING OR CHIPPING THE CONTRACTOR SHALL ONLY REMOVE REINFORCING BARS WHICH CANNOT BE BENT INTO AREAS WHERE NEW CONCRETE WOULD COMPLETELY COVER THEM.

3. IF FRACTURE OF ADJACENT CONCRETE OCCURS DURING DEMOLITION/ ALTERATION WORK, THE REPAIR SHALL BE WITH AN ENGINEER APPROVED PRESSURE INJECTED EPOXY, TO THE COMPLETE SATISFACTION OF THE ENGINEER, AT THE CONTRACTOR'S EXPENSE.

4. CONTRACTOR SHALL PROVIDE WRITTEN PLAN AND DESCRIPTION OF ALL DEMOLITION, MODIFICATION, OR ALTERATION WORK ON EXISTING STRUCTURES FOR REVIEW AND ACCEPTANCE PRIOR TO BEGINNING WORK.

5. ANY REMAINING EXPOSED REINFORCING STEEL AFTER DEMO SHALL BE COATED WITH CORROSION INHIBITING COMPOUND. USE SIKA ARMATEC 110 EPOCEM OR APPROVED EQUAL.

MASONRY

1. HOLLOW CONCRETE BLOCK (MASONRY UNITS) SHALL CONFORM TO ASTM C90, GRADE N (MEDIUM WEIGHT) WITH A MINIMUM COMMPRESSIVE STRENGTH OF 1900 PSI ON THE NET AREA (f'm=1,500 PSI)

2. ALL MORTAR SHALL BE TYPE N AND COMPLY WITH ASTM C476, WITH MINIMUM COMPRESSIVE STRENGTH AT 2500 PSI.

3. REINFORCING BARS SHALL CONFORM TO ASTM A615 GRADE 60.

4. VERTICAL REINFORCEMENT TO BE CONTINUOUS AND LAPPED A MINIMUM OF 48 BAR DIAMETERS.

5. DOWEL ALL VERTICAL REINFORCEMENT FROM FOUNDATIONS AS SHOWN ON PLANS.

6. PROVIDE A MINIMUM OF 1/2" GROUT BETWEEN REINFORCING AND MASONRY UNITS.

PRECAST CONCRETE

1. DESIGN OF PRECAST MEMBERS (ROOF PLANKS) SHALL CONFORM TO ACI 318-14 AND SHALL BE PRESTRESSED TO SUSTAIN THE SUPERIMPOSED LOADS INDICATED.

2. ALL PRECAST, PRESTRESSED ROOF PLANKS SHALL HAVE MINIMUM COMPRESSIVE STRENGTH OF 3500 PSI AT RELEASE OF PRESTRESS CABLES AND 5000 PSI AT 28 DAYS.

3. PROVIDE 1/2" THICK BEARING PADS WHERE INDICATED.

4. ALL PRE-STRESSED STRANDS SHALL BE UNCOATED, 7 WIRE LOW RELAXATION STRANDS CONFORMING TO ASTM A4 16.

5. PRECAST MANUFACTURER SHALL DESIGN PRECAST HOLLOW CORE ROOF PLANK SYSTEM INCLUDING ALL REQUIRED STEEL HANGERS, WHICH SHALL BE HOT DIPPED GALVANIZED STEEL. DESIGN CALCULATION FOR ALL PRECAST MEMBERS SHALL BE SEALED BY A PROFESSIONAL ENGINEER REGISTERED IN THE STATE OF MICHIGAN AND SHALL BE SUBMITTED FOR REVIEW PRIOR TO FABRICATION.

CAST-IN-PLACE CONCRETE

1. THE DETAILING, BENDING, AND PLACING OF REINFORCING STEEL SHALL BE IN ACCORDANCE WITH ACI STANDARD 350-06/350R-06 CODE AND ACI DETAILING MANUAL, SP-66 (94). FIELD BENDING WILL NOT BE PERMITTED UNLESS APPROVED BY ENGINEER

2. ALL REINFORCING STEEL SHALL BE NEW BILLET STEEL DEFORMED BARS CONFORMING TO ASTM A615, GRADE 60.

3. ALL CONCRETE SHALL HAVE A COMPRESSIVE STRENGTH OF 5000 PSI @ 28 DAY UNLESS OTHERWISE NOTED

4. STEEL REINFORCING SHALL NOT BE SPLICED AT POINTS OTHER THAN SHOWN ON THE PLANS, EXCEPT AS APPROVED BY THE ENGINEER, UNLESS NOTED OTHERWISE.

5. ALL STIRRUPS AND TIES SHALL BE CLOSED TYPE WITH 135 DEGREE HOOKS, U.N.O.

6. ALL COLD JOINTS IN CONCRETE STRUCTURES SHALL HAVE A CONTINUOUS WATERSTOP CREATING A WATERTIGHT JOINT AS DETAILED. WHERE NOT SPECIFIED ALL COLD JOINTS SHALL HAVE A HYDROPHILIC WATERSTOP PER SPECIFICATIONS.

7. THE LENGTH OF ALL LAP SPLICES SHALL BE AS SPECIFIED IN "REINFORCING TENSION SPLICE TABLE" ON THIS SHEET UNLESS OTHERWISE INDICATED IN DRAWINGS. WHEN BARS OF DIFFERENT SIZE ARE BEING LAPPED, THE LENGTH SHALL BE THE SPECIFIED LAP LENGTH OF THE LARGER BAR.

8. BOTTOM AND TOP REINFORCING BARS FOR ALL DISCONTINUOUS ENDS OF BEAMS AND SLABS SHALL HAVE HOOKS AND SPLICES CONFORMING TO ACI MANUAL OF STANDARD PRACTICE.

9. ALL FILLET AND TOPPING CONCRETE SHALL BE HAVE A MINIMUM 28 DAY COMPRESSIVE STRENGTH OF 6000 PSI. FILLET CONCRETE, SHALL BE PLACED TO PRODUCE CONTOURS INDICATED ON PLANS, AND SHALL RECEIVE SMOOTH FLOAT FINISH.

10. CONCRETE COVER OVER REINFORCEMENT SHALL BE 2 INCHES MINIMUM, UNLESS NOTED OTHERWISE, AND 3-INCHES MINIMUM WHERE CAST AGAINST EARTH.

METALS

STEEL

1. STRUCTURAL STEEL AND MISCELLANEOUS METALS DESIGN SHALL CONFORM TO THE SPECIFICATION FOR STRUCTURAL STEEL BUILDINGS, AISC/ANSI 360.

2. BOLTS SHALL BE A MINIMUM 3/4" DIAMETER, ASTM A325N, TYPE 1, GALVANIZED, UNLESS NOTED OTHERWISE. PROVIDE COMPATIBLE A563 GRADE DH, HEAVY HEX NUTS, AND F436 GRADE 1 WASHERS.

3. ALL GALVANIZED STEEL SHALL BE HOT-DIP GALVANIZED CONFORMING TO ASTM A123, UNO.

4. ALL STAINLESS STEEL BEAMS AND MISCELLANEOUS SHAPES SHALL CONFORM TO THE REQUIREMENTS OF ASTM A1637 TYP 316/316L GRADE A OR BETTER, HOT ROLLED AND ANNEALED FINISH.

ALUMINUM

1. ALUMINUM CONSTRUCTION SHALL CONFORM TO THE LATEST EDITION OF THE "ALUMINUM CONSTRUCTION MANUAL" OF THE ALUMINUM ASSOCIATION.

2. ALL ALUMINUM SHALL BE ALLOY 6061-T6 MEETING THE REQUIREMENTS OF ASTM B 308 UNO.

3. ALL ALUMINUM IN CONTACT WITH CONCRETE AND MASONRY SHALL HAVE THE CONTACT SURFACES COATED WITH HEAVY ALKALI-RESISTANT BITUMINOUS PAINT.

4. ALL BOLTED CONNECTIONS SHALL BE MADE WITH 3/4" DIA A316 BOLTS UNO.

5. ALL ALUMINUM SHAPES SHALL MEET THE MINIMUM SECTION PROPERTIES LISTED IN THE "2005 ALUMINUM DESIGN MANUAL" PUBLISHED BY THE ALUMINUM ASSOCIATION.

6. ALL 1-1/2" DEEP ALUMINUM GRATING INDICATED ON PLANS SHALL BE 15-SGI-4 BY OHIO GRATINGS INC, OR APPROVED EQUAL. GRATING SHALL HAVE A MINUMUM ALLOWABLE WORKING STRESS OF 12,000 PSI WITH THE FOLLOWING MINIMUM SECTION PROPERTIES:
   Sx = 0.90 IN^3/FT
   Ix = 0.675 IN^4/FT

7. ALL GRATING SHALL HAVE STRIATED SURFACES ON TOP FLANGE OF BEARING BARS.

8. ALL GRATING PENETRATIONS SHALL BE CUT NEATLY AND IN A RECTANGULAR BAND BAR OF THE SAME HEIGHT AND MATERIAL SHALL BE INSTALLED BY WELDING.

9. ALL GRATING SHALL BE SECURED TO FRAMING MEMBERS USING STAINLESS STEEL SADDLE CLIPS AND 1/4" DIA STAINLESS STEEL TEK SCREWS AS SPECIFIED BY THE GRATING MANUFACTURER.

FOUNDATIONS

1. CONTRACTOR SHALL BE AWARE OF AND VERIFY LOCATION OF ALL UNDERGROUND UTILITIES, TANKS, FOUNDATIONS, ETC. DUE CARE SHALL BE EXERCISED DURING CONSTRUCTION ACTIVITIES SUCH THAT THE EXISTING UTILITIES ARE NOT DAMAGED.

2. ALL EXCAVATED MATERIAL SHALL BE DISPOSED OF IN AN APPROVED MANNER. ALL EXCAVATIONS SHALL CONFORM TO OSHA REQUIREMENTS.

3. ALL EXCAVATION, FILLING, BACKFILLING, FOUNDATION AND COMPACTION REQUIREMENTS SHALL BE IN ACCORDANCE WITH REQUIREMENTS NOTED ON THE DRAWINGS, PROJECT SPECIFICATIONS, AND THE PROJECT GEOTECHNICAL REPORT.

4. BARRICADE ALL OPEN EXCAVATIONS OCCURING AS PART OF THE WORK AND POST WITH WARNING LIGHTS.

5. EXISTING FILL BELOW THE FOUNDATIONS FOR THE WASTE UNLOADING STATION IS NOT SUITABLE AND SHOULD BE OVEREXCAVATED TO COMPETENT MATERIAL AND REPLACED WITH COMPACTED 21AA AGGREGATE, PER RECOMMENDATIONS PROVIDED IN THE GEOTECHNICAL REPORT. CONTRACTOR SHALL RETAIN THE SERVICES OF A GEOTECHNICAL ENGINEER DURING THE EXCAVATION AND SUBGRADE IMPROVEMENTS PHASE TO TEST AND VERIFY THE SUBGRADE IS PREPPED AND SUITABLE FOR SUPPORTING THE NEW FOUNDATIONS.

STRUCTURAL ABBREVIATIONS

ALT	ALTERNATE	HPC	HIGH PERFORMANCE COATING
ALUM	ALUMINUM	HK	HOOK
B	BOTTOM	HT	HEIGHT
BLDG	BUILDING	ID	INSIDE DIAMETER
BM	BEAM	IE	INVERT ELEVATION
BSMT	BASEMENT	IF	INSIDE FACE
CJ	CONSTRUCTION JOINT	IN	INCHES
CL	CENTERLINE	INT	INTERIOR
CLR	CLEAR	JT	JOINT
COL	COLUMN	KIP	THOUSAND POUNDS
CONC	CONCRETE	KSI	KIPS PER SQUARE INCH
CONST	CONSTANT	KB	KNEE BRACE
CONSTR	CONSTRUCTION	L	LENGTH
CONT	CONTINUOUS	LP	LOW POINT
CLSM	CONTROLLED LOW STRENGTH MATERIAL	LGHT	LENGTH
CMU	CONCRETE MASONRY UNIT	MAX	MAXIMUM
COR	CORNER	MIN	MINIMUM
CY	CUBIC YARD	MCP	MULTIPLE CORROSION PROTECTION
DBR	DOWEL BAR REPLACEMENT	MO	MASONRY OPENING
DET	DETAIL	NA	NOT APPLICABLE
DIA	DIAMETER	NF	NEAR FACE
DIAG	DIAGONAL	NS	NEAR SIDE
DISC	DISCONTINUOUS	NTS	NOT TO SCALE
DWLS	DOWELS	NIC	NOT IN CONTRACT
EJ	EXPANSION JOINT	OC	ON CENTER
EE	EACH END	OD	OUT SIDE DIAMETER
EF	EACH FACE	OF	OUT SIDE FACE
ES	EACH SIDE	OPNG	OPENING
EQ	EQUAL	PSF	POUNDS PER SQ. FEET
EW	EACH WAY	PSI	POUNDS PER SQUARE INCH
EA	EACH	PT	PRESSURE TREATED
EL	ELEVATION	REINF	REINFORCEMENT
EX	EXISTING	RE	REFER TO
EXT	EXTERIOR/ EXTENSION	REM	REMOVABLE
FC	FILLET CONCRETE	SHTS	SHEETS
FD	FLOOR DRAIN	SIM	SIMILAR
FF	FAR FACE	SJ	SLAB CONTROL JOINT
FS	FAR SIDE	SS	STAINLESS STEEL
FIN	FINISH	STIR	STIRRUPS
FL	FLOOR	STRUCT	STRUCTURAL
FND	FOUNDATION	T/	TOP
FT	FEET	TERS	TEMPORARY EARTH RETENTION SYSTEM
GALV	GALVANIZED	THK	THICK
GR	GRADE	TOS	ELEVATION TOP OF STRUCTURAL STEEL
GVW	GROSS VEHICLE WEIGHT	TYP	TYPICAL
H	HORIZONTAL	UNO	UNLESS NOTED OTHERWISE
HC	HOLLOW CORE	V	VERTICAL
HP	HIGH POINT	W	WIDTH
		WP	WORK POINT

REINFORCING TENSION SPLICE TABLE

BAR SIZE	TENSION LAP LENGTH	* TOP BARS
#3	16"	22"
#4	20"	29"
#5	24"	36"
#6	29"	43"
#7	42"	63"
#8	48"	72"
#9	54"	81"
#10	61"	91"
#11	67"	101"

NOTES

1. ABOVE TABLE IS FOR NORMAL WEIGHT CONCRETE; f'c=5,000 PSI AND REINFORCING STEEL; fy=60,000 PSI.

2. ALL SPLICES SHALL BE CONSIDERED TENSION SPLICES USING LAP LENGTHS IN TABLE ABOVE UNLESS SPECIFICALLY SHOWN OTHERWISE ON THE DRAWINGS.

3. LENGTHS ARE BASED ON LAP CLASS B SPLICES WITH CENTER TO CENTER SPACING OF BARS EQUAL TO OR GREATER THAN 6 DIAMETERS.

4. TOP BARS ARE HORIZONTAL BARS WITH MORE THAN 12" OF CONCRETE CAST UNDER THEM.

5. USE TENSION LAP LENGTHS FOR HORIZ & VERT. WALL BARS.

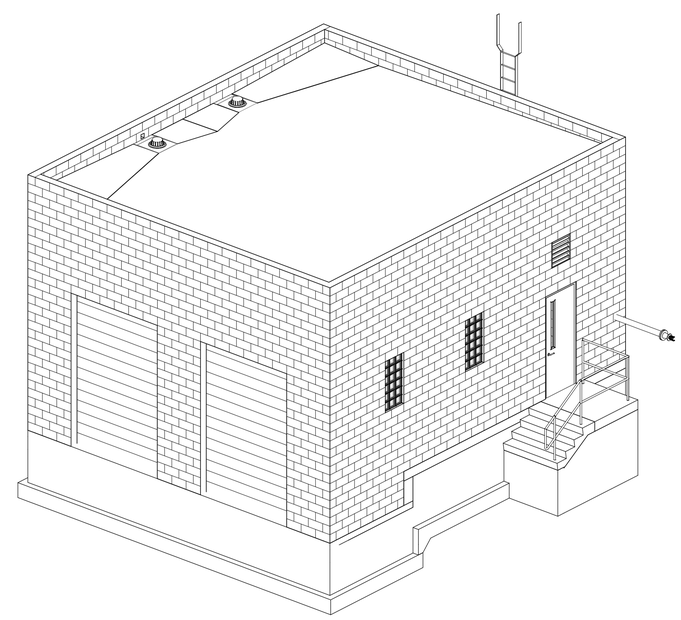

1 WASTE UNLOADING ISO VIEW
SCALE:

REV#	DATE	DESCRIPTION	BY

WADE TRIM
555 South Saginaw Street, Suite 201
Flint, MI 48502
810.235.2555 / 800.841.0342
FAX: 810.235.4975
www.wadetrim.com

HRC
HUBBELL, ROTH & CLARK, INC
CONSULTING ENGINEERS SINCE 1915
555 HULET DRIVE
BLOOMFIELD HILLS, MICH.
P.O. BOX 824
48303 - 0824
PHONE: (248) 454-6300
FAX (Tel. Fleet): (248) 454-6312
FAX (Inst. Fleet): (248) 338-2592
WEB SITE: http:// www.hrc-engr.com

CITY OF FLINT
WASTE UNLOADING STATION PROJECT

STRUCTURAL GENERAL NOTES & TYP. DETAILS

ISSUED FOR:	DATE:	BY:
BIDS	2023.06.24	TSW

JOB NO. COF1076.01F

SHEET S-100

PLOTTED 6/21/2023 3:23:57 PM

BIM 360://COF1076-7-WPCF/WU_WT_S_R21.rvt

DIAGONAL BARS ALL OPENINGS				
SLAB OR WALL THICKNESS		DIAG. BARS - (4) SIDES OF OPENING E.F.; EQUAL SPACING		
FROM	TO & INCLUDING	NO.	BAR SIZE	LENGTH
0	8"	1	#4	3'-0"
8"	16"	2	#5	4'-0"
16"	24"	2	#6	5'-0"
24"	32"	3	#6	5'-0"
32"	40"	3	#7	6'-0"

LENGTH OF EXTRA BARS CENTERED ON ℄ OF OPENING			
BAR SIZE	LENGTH = OPENING PLUS	BAR SIZE	LENGTH = OPENING PLUS
#4	3'-0"	#8	10'-0"
#5	4'-0"	#9	12'-0"
#6	6'-0"	#10	16'-0"
#7	8'-0"	#11	20'-0"

OPENING REINFORCEMENT SCHEDULE				
TYPE OF OPENING	THICKNESS	REINFORCEMENT REQUIRED		
		EXTRA	DIAGONAL	[- BARS
UNFRAMED	16" OR LESS	YES	YES	NO
	16" TO 4'-0"	YES	YES	YES
FRAMED (BEAMS)	ALL	NO	YES	NO

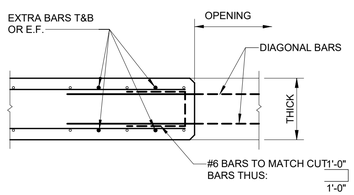

SLAB OPENING DETAIL OR WALL JAMB PLAN

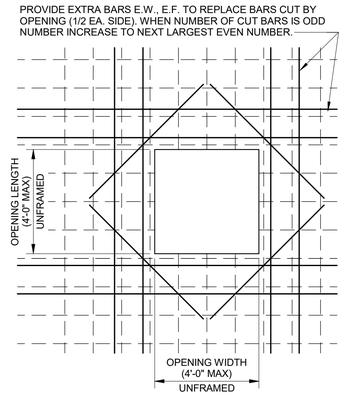

UNFRAMED OPENING DETAIL PLAN-RECTANGULAR SLAB OPENING ELEV.-RECTANGULAR WALL OPENING

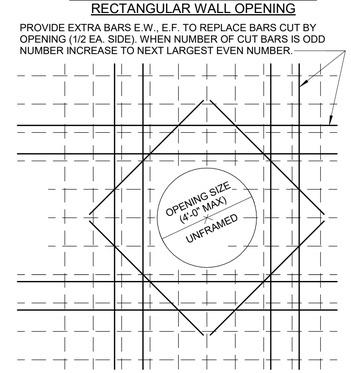

UNFRAMED OPENING DETAIL PLAN-CIRCULAR SLAB OPENING ELEV.-CIRCULAR WALL OPENING

1 ADDITIONAL REINFORCING DETAILS
SCALE: 3/8" = 1'-0"

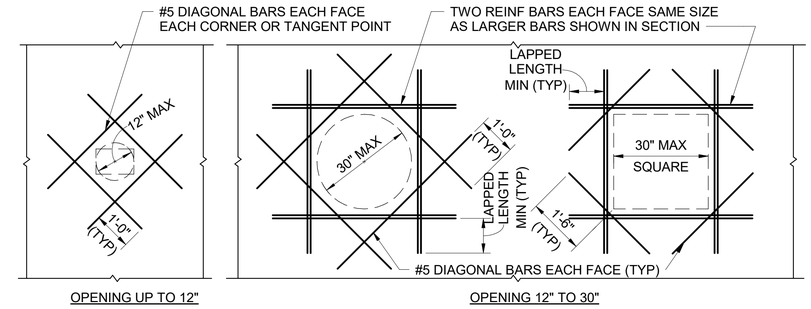

2 REINF. DETAILS FOR SMALL OPENINGS
SCALE: 1/2" = 1'-0"

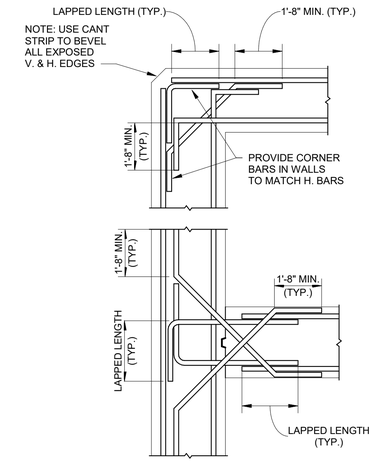

3 SECTIONAL PLAN OF WALLS DETAIL
SCALE: 3/8" = 1'-0"

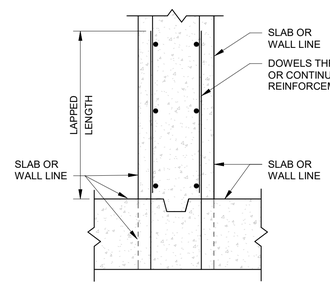

(FOR MEMBERS UP TO 18" THICK)

WALL OR SLAB JOINT NOTES:

1. ALL KEYWAYS SHALL BE CONSTRUCTED USING WOOD FORM EMBEDDED IN PLASTIC CONCRETE AND REMOVED AFTER CURING.

4 STANDARD WALL TO WALL OR WALL TO SLAB JOINT DETAIL
SCALE: 1" = 1'-0"

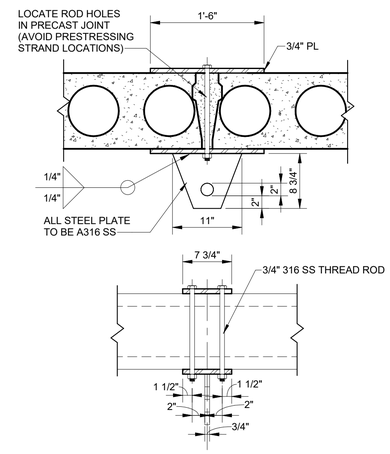

5 HOIST POINT IN PRECAST PANELS
SCALE: 1" = 1'-0"

NOTES:
1. SAW CUT TO BE MADE FROM 4 TO 20 HOURS AFTER EACH POUR.
2. FOR SLAB ON GRADE ONLY.

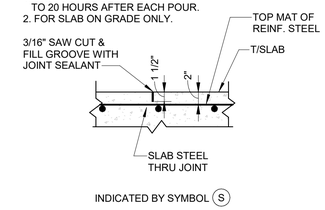

6 TYPE S CONCRETE SLAB JOINT
SCALE: 1" = 1'-0"

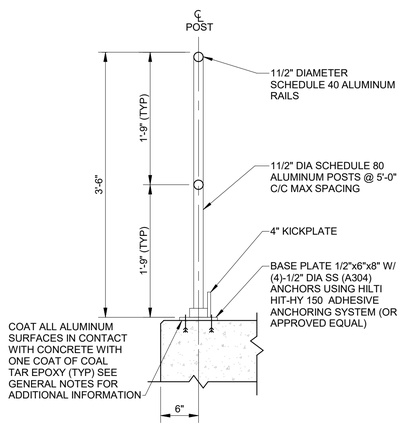

8 ALUM. GUARDRAIL DETAIL-TOP MOUNT
SCALE: 1" = 1'-0"

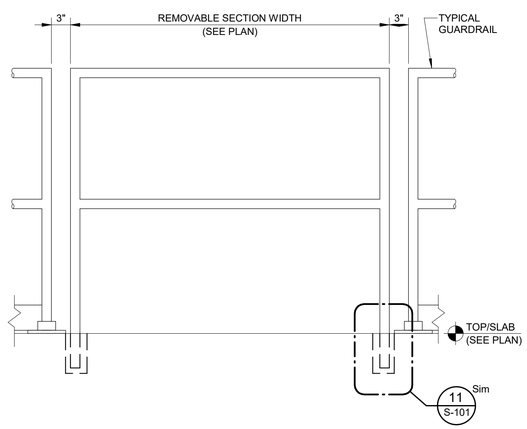

10 REMOVABLE ALUM. GUARDRAIL DETAIL
SCALE: 1" = 1'-0"

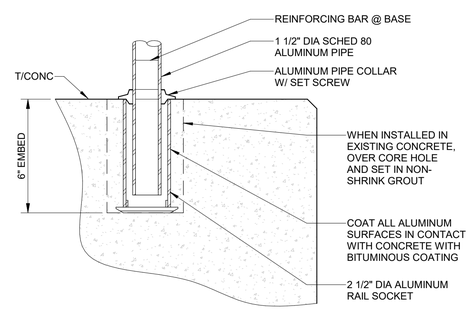

11 REMOVABLE GUARDRAIL ANCHOR DETAIL
S-101
SCALE: 3" = 1'-0"

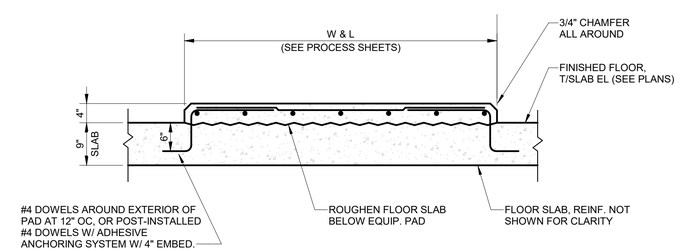

7 EQUIPMENT PAD DETAIL
SCALE: 3/4" = 1'-0"

REV#	DATE	DESCRIPTION	BY

WADE TRIM
555 South Saginaw Street, Suite 201
Flint, MI 48502
810.235.2555 / 800.841.0342
FAX: 810.235.4975
www.wadetrim.com

HRC
HUBBELL, ROTH & CLARK, INC
CONSULTING ENGINEERS SINCE 1915
555 HULET DRIVE, BLOOMFIELD HILLS, MICH. 48303 - 0024
P.O. BOX 824, 48303 - 0824
PHONE: (248) 454-6300
FAX (1st. Floor): (248) 454-6312
FAX (2nd. Floor): (248) 338-2592
WEB SITE: http:// www.hrc-engr.com

CITY OF FLINT
WASTE UNLOADING STATION PROJECT

WASTE UNLOADING STATION - TYPICAL DETAILS

ISSUED FOR:	DATE:	BY:
BIDS	2023.06.24	TSW

JOB NO. COF1076.01F

SHEET S-101

PLOTTED 6/21/2023 3:23:58 PM
BIM 360://COF-1076-7-WPCF/WU_WT_S_R21.rvt

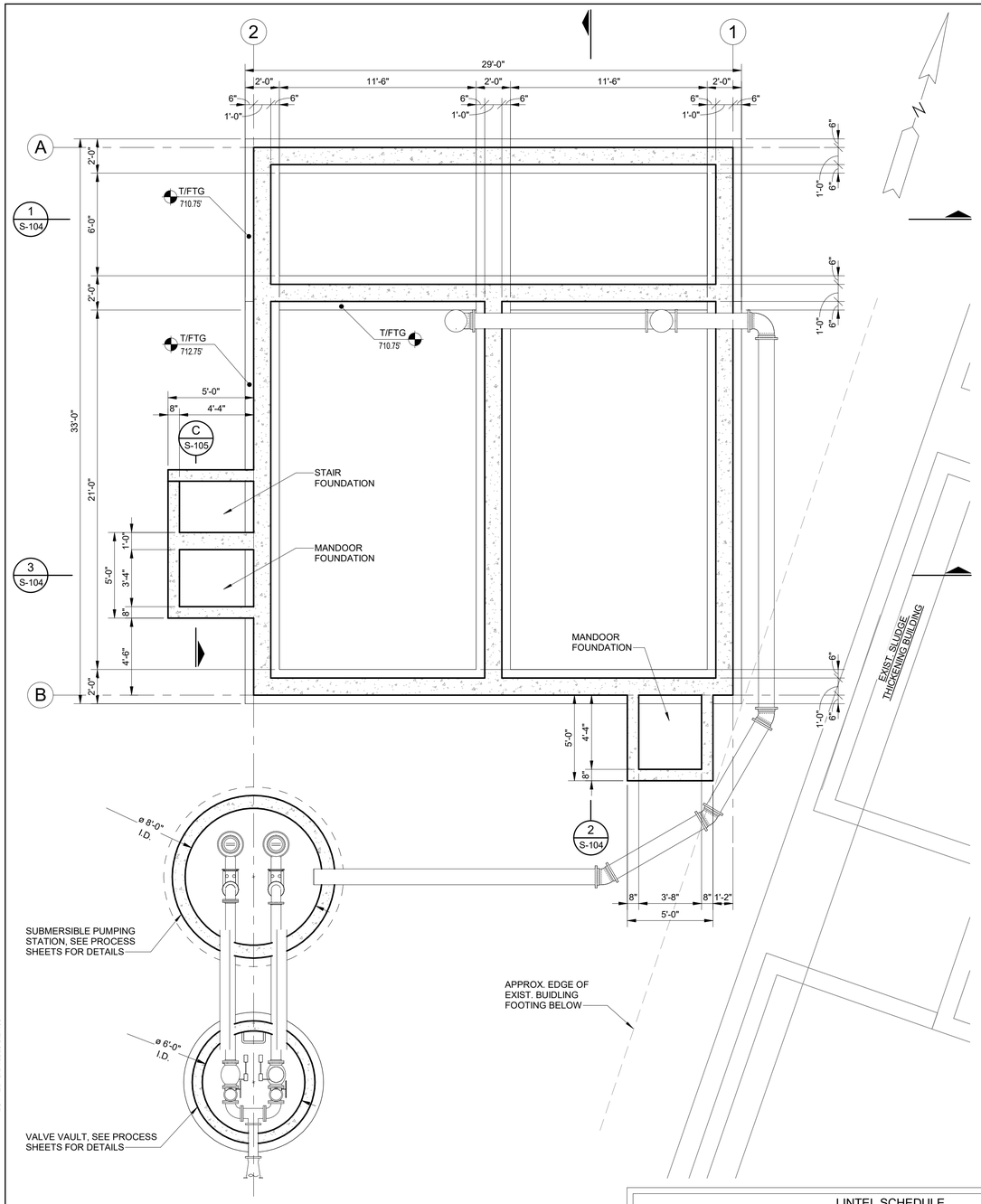

WASTE UNLOADING STATION - FOUNDATION PLAN (EL 712.75-FT)

SCALE: 1/4" = 1'-0"

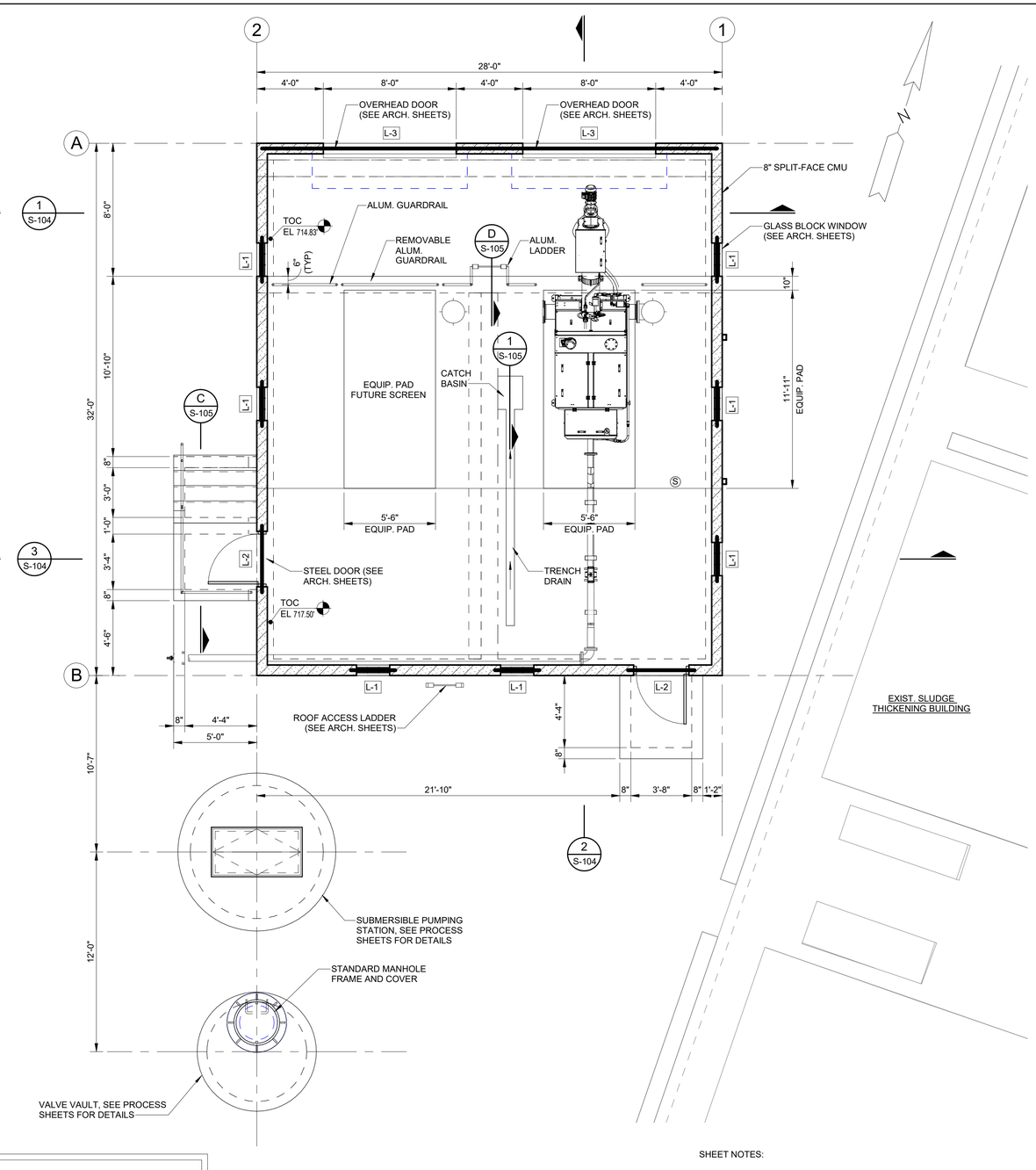

WASTE UNLOADING STATION - SCREEN FLOOR PLAN (EL 717.50-FT)

SCALE: 1/4" = 1'-0"

LINTEL SCHEDULE

MARK	TYPE	SIZE (WXD)	REINFORCING	BEARING LENGTH (EA END)	REMARKS
L-1	MASONRY	8"X16"	(1)#5 BAR	8-INCH	
L-2	MASONRY	8"X16"	(2)#5 BAR	8-INCH	
L-3	MASONRY	8"X24"	(2)#5 BAR	8-INCH	FULL LENGTH OF WALL

NOTES:

1) UNLESS MORE STRINGENT REINFORCING IS NOTED OTHERWISE, NOT LESS THAN (2)-#7 BARS SHALL BE PROVIDED ON EACH SIDE OF ALL DOORS, WINDOWS, LOUVERS, AND OTHER OPENINGS IN MASONRY OR CAST-IN-PLACE CONCRETE WALLS. THESE BARS SHALL EXTEND FULL HEIGHT OF WALL.

2) SEE DOOR AND WINDOW SCHEDULES ON ARCHITECTURAL SHEETS FOR LINTEL DETAILS AT DOOR AND WINDOW OPENINGS.

SHEET NOTES:

1) CONTINUOUS FOOTINGS HAVE BEEN DESIGNED USING AN ALLOWABLE BEARING PRESSURE OF 4,000 PSF. REFER TO THE PROJECT GEOTECHNICAL REPORT FOR ADDITIONAL INFORMATION ON THE SPECIFIC SOIL AND GROUNDWATER CONDITION BASELINES.

2) SEE PROCESS DRAWINGS FOR SIZE AND LOCATION OF EQUIPMENT PADS, AND SEE MECH. DRAWINGS FOR SIZE AND LOCATION OF FLOOR DRAINS.

3) SEE ARCHITECTURAL DRAWINGS FOR MASONRY DETAILS AND DOOR / WINDOW LOCATIONS.

4) TYPICAL CONCRETE SLAB DESIGN LIVE LOAD = 300 PSF.

5) MASONRY REINFORCING:
   A) VERTICAL REINFORCING:
      a. PROVIDE (2)-#7 BARS FULL HEIGHT OF WALL ON BOTH SIDES OF ALL OPENINGS.
      b. PROVIDE (1)-#7 BAR FULL HEIGHT AT CORNERS, UNO.
      c. PROVIDE #6 BARS VERT. AT 16" OC TYP EXT. WALLS.
   B) PROVIDE DOWELS INTO FLOOR SLAB TO MATCH SIZE AND SPACING OF MASONRY WALL VERTICAL REINFORCING (TYP).

REV#	DATE	DESCRIPTION	BY

WADE TRIM
555 South Saginaw Street, Suite 201
Flint, MI 48502
810.235.2555 / 800.841.0342
FAX: 810.235.4975
www.wadetrim.com

HRC
HUBBELL, ROTH & CLARK, INC
CONSULTING ENGINEERS SINCE 1915
555 HULET DRIVE
BLOOMFIELD HILLS, MICH.
P.O. BOX 824
48303 - 0824
PHONE: (248) 454-6300
FAX (1st. Floor): (248) 454-6312
FAX (2nd. Floor): (248) 338-2592
WEB SITE: http:// www.hrc-engr.com

CITY OF FLINT
WASTE UNLOADING STATION PROJECT

WASTE UNLOADING STATION - PLANS

ISSUED FOR:	DATE:	BY:
BIDS	2023.06.24	TSW

JOB NO. COF1076.01F

SHEET S-102

PLOTTED 6/21/2023 3:24:03 PM
BIM 360://COF1076-7-WPCFWU_WT_S_R21.rvt

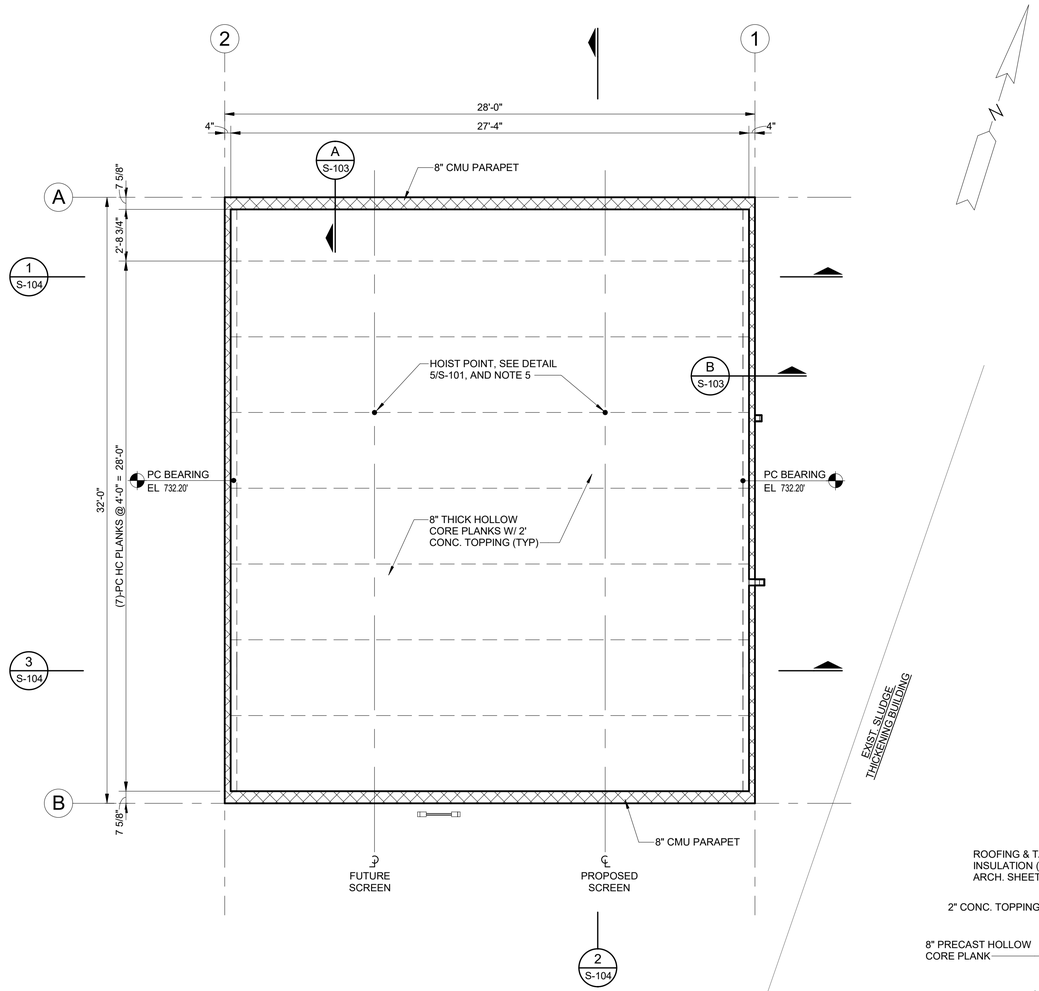

1 S-103 ROOF PLAN (EL 732.25-FT)
SCALE: 1/4" = 1'-0"

NOTES:

1) FILL HOLLOW CORE KEYWAYS COMPLETELY WITH GROUT.

2) SEE DRAWING S-100 FOR MASONRY VERTICAL REINFORCING SIZE AND SPACING. PROVIDE DOWELS INTO FOUNDATION TO MATCH SIZE AND SPACING OF MASONRY WALL REINFORCING.

3) PRECAST PLANK DESIGN LOADS:
   A. SUPERIMPOSED DEAD LOAD = 25 PSF
   B. LIVE LOAD = 35 PSF (UNLESS NOTED OTHERWISE)
   C. PLAN DEAD LOAD = ACTUAL WEIGHT OF PLANK & TOPPING

4) PRECAST MANUFACTURER SHALL DESIGN PRECAST HOLLOW CORE ROOF PLANK SYSTEM FOR THE INDICATED LOADING, INCLUDING HOLLOW CORE PLANKS. CALCULATIONS SHALL BE SIGNED AND SEALED BY A PROFESSIONAL ENGINEER IN THE STATE OF MICHIGAN.

5) HOIST POINT LOAD = 4,000 LBS

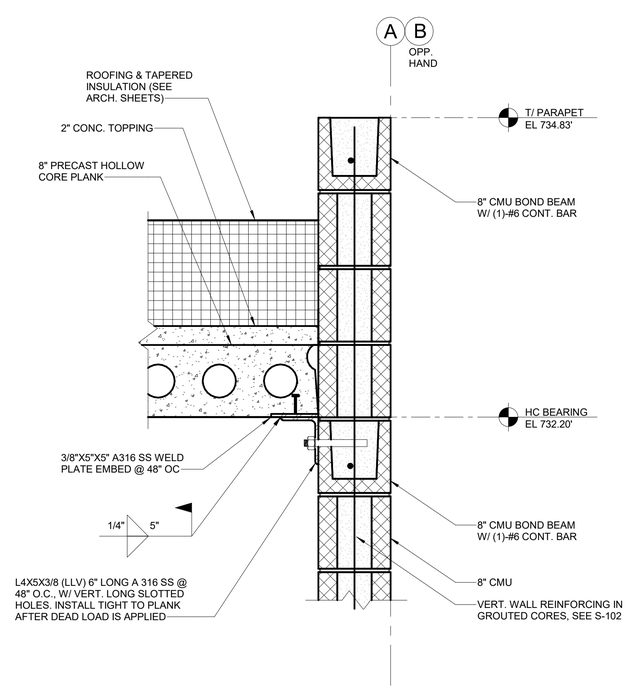

A S-103 PARAPET DETAIL (NON-BEARING END)
SCALE: 1 1/2" = 1'-0"

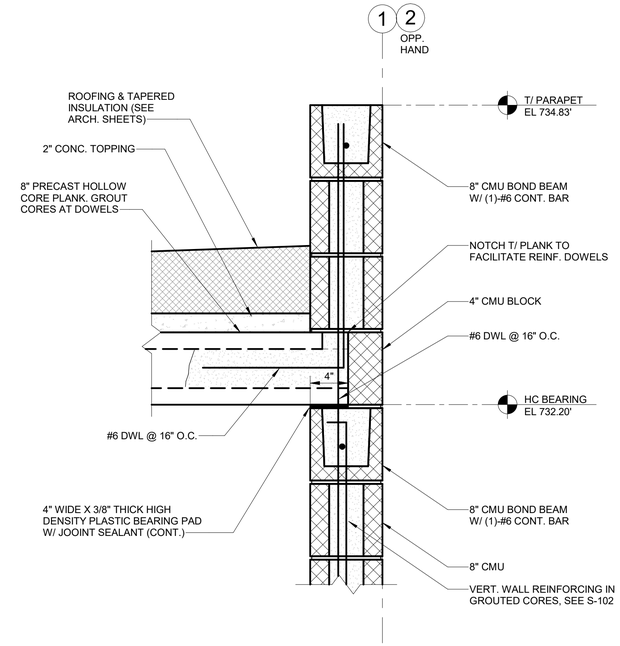

B S-103 PARAPET DETAIL (BEARING END)
SCALE: 1 1/2" = 1'-0"

REV#	DATE	DESCRIPTION	BY

WADE TRIM
555 South Saginaw Street, Suite 201
Flint, MI 48502
810.235.2555 / 800.841.0342
FAX: 810.235.4975
www.wadetrim.com

HRC
HUBBELL, ROTH & CLARK, INC
CONSULTING ENGINEERS SINCE 1915
555 HULET DRIVE
BLOOMFIELD HILLS, MICH.
P.O. BOX 824
48303 - 0824
PHONE: (248) 454-6300
FAX (1st. Floor): (248) 454-6312
FAX (2nd. Floor): (248) 338-2592
WEB SITE: http:// www.hrc-engr.com

CITY OF FLINT
WASTE UNLOADING STATION PROJECT

WASTE UNLOADING STATION - ROOF PLAN AND DETAILS

ISSUED FOR:	DATE:	BY:
BIDS	2023.06.24	TSW

JOB NO. COF1076.01F

SHEET
S-103

PLOTTED 6/21/2023 3:24:04 PM
BIM 360://COF1076-7-WPCF/WU_WT_S_R21.rvt

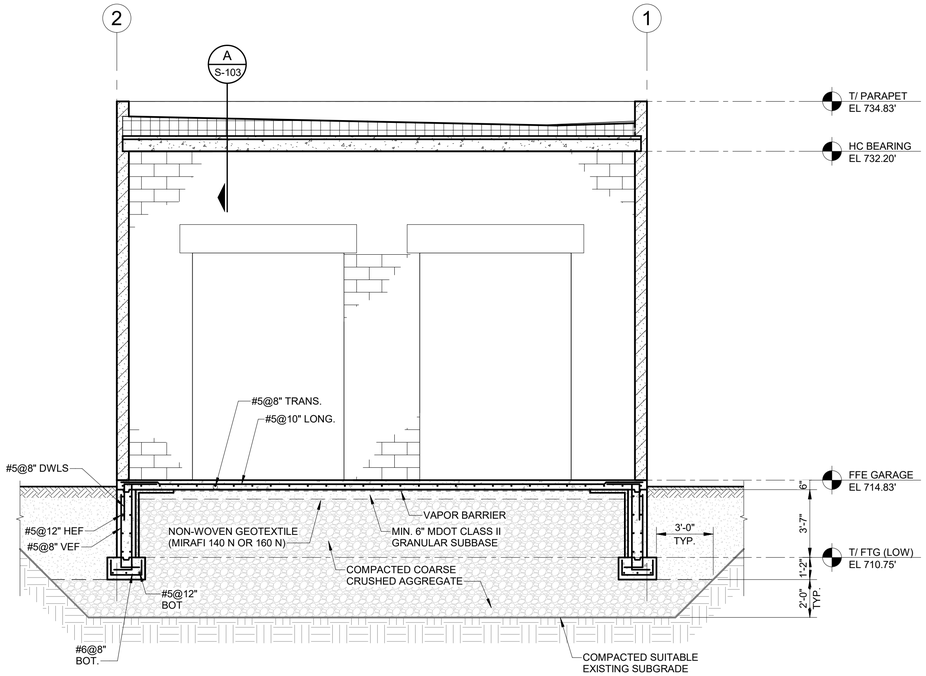

1 SECTION
S-102 SCALE: 1/4" = 1'-0"

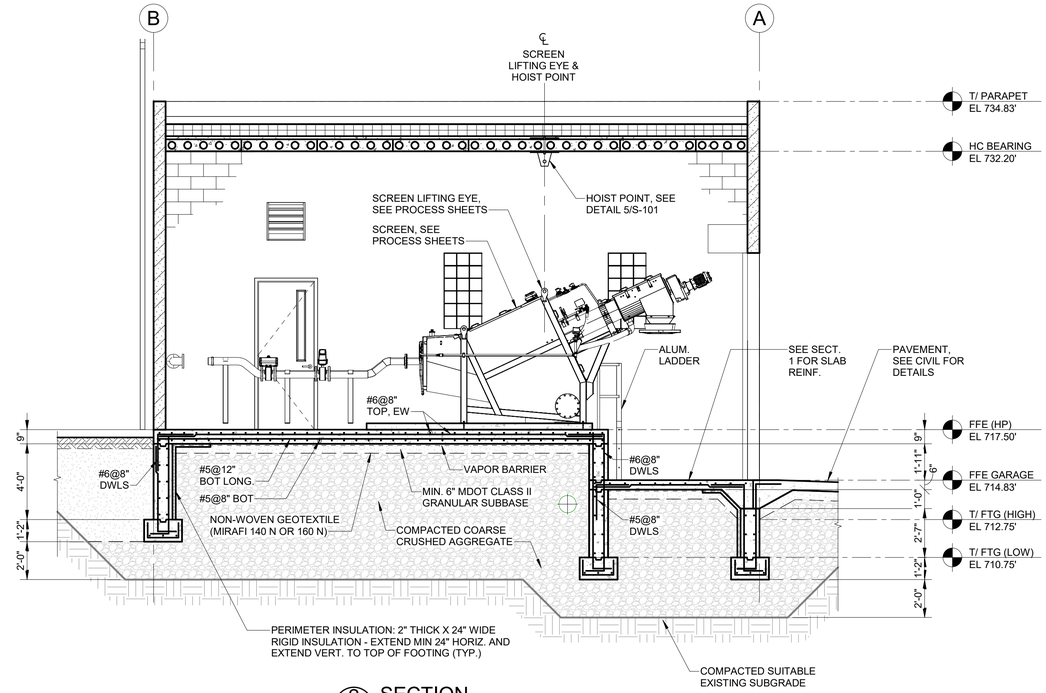

2 SECTION
S-102 SCALE: 1/4" = 1'-0"

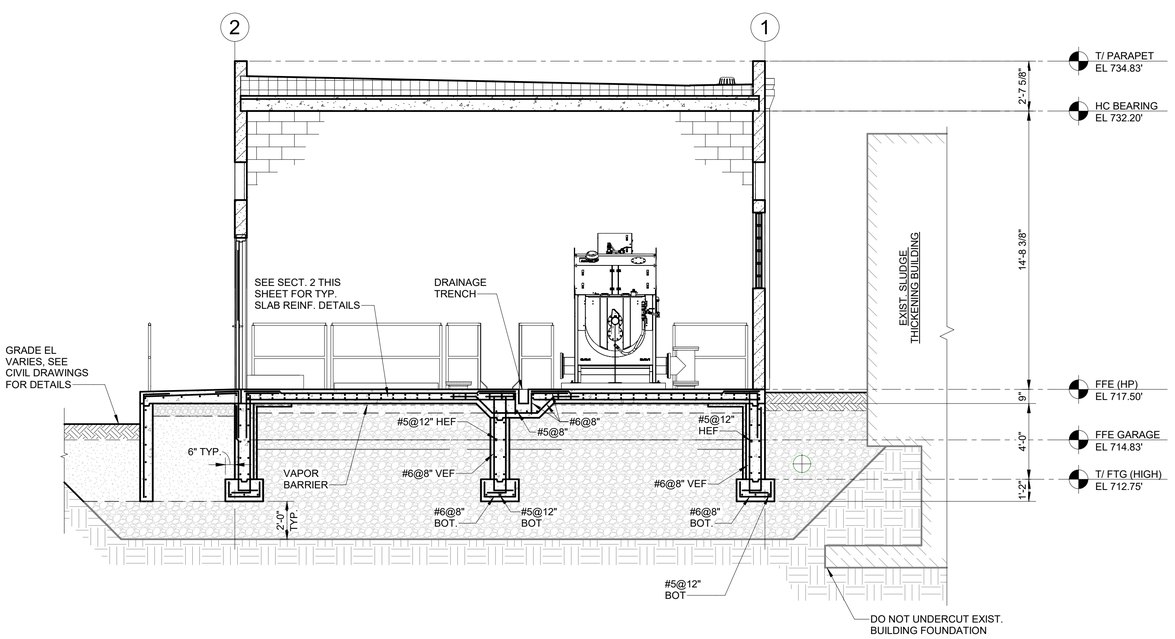

3 SECTION
S-102 SCALE: 1/4" = 1'-0"

REV#	DATE	DESCRIPTION	BY

CITY of FLINT MICHIGAN

WADE TRIM
555 South Saginaw Street, Suite 201
Flint, MI 48502
810.235.2555 / 800.841.0342
FAX: 810.235.4975
www.wadetrim.com

HRC
HUBBELL, ROTH & CLARK, INC
CONSULTING ENGINEERS SINCE 1915
555 HULET DRIVE
BLOOMFIELD HILLS, MICH.
P.O. BOX 824
48303 - 0824
PHONE: (248) 454-6300
FAX (Tel. Fleet): (248) 454-6312
FAX (Sec. Fleet): (248) 358-2592
WEB SITE: http:// www.hrc-engr.com

CITY OF FLINT
WASTE UNLOADING STATION PROJECT
WASTE UNLOADING STATION - SECTIONS

ISSUED FOR:	DATE:	BY:
BIDS	2023.06.24	TSW

JOB NO. COF1076.01F

SHEET S-104

PLOTTED 6/21/2023 3:24:15 PM

BIM 360://COF1076-7-WPCF/WU_WT_S_R21.rvt

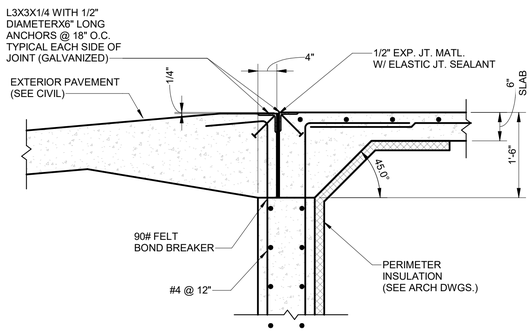

A FOUNDATION SECTION AT TRUCK DOOR
SCALE: 3/4" = 1'-0"

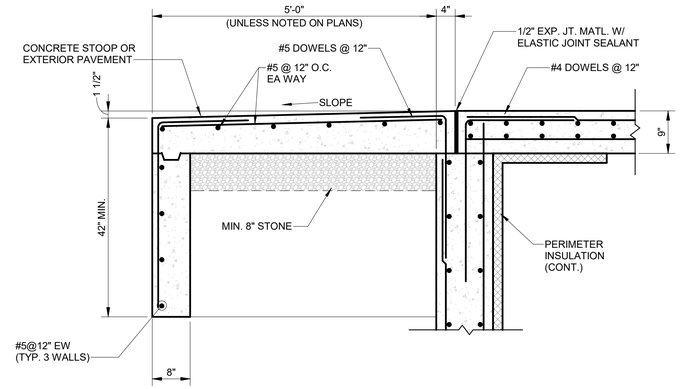

B FOUNDATION SECTION AT MANDOOR
SCALE: 3/4" = 1'-0"

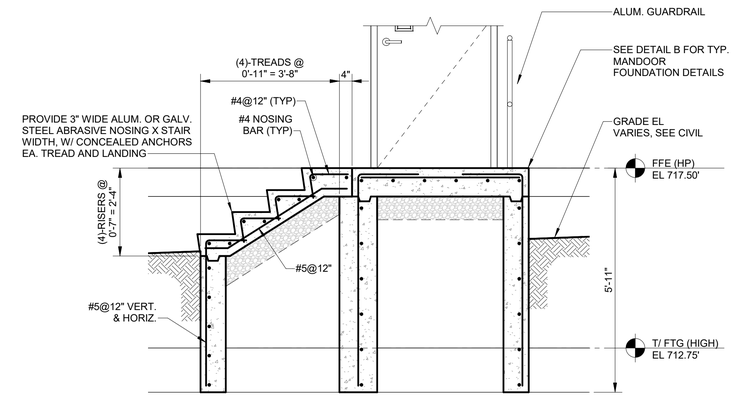

C S-102 WEST STAIR SECTION
SCALE: 1/2" = 1'-0"

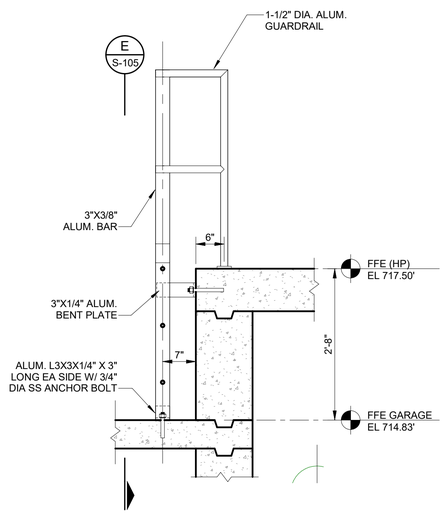

D S-102 LADDER DETAIL
SCALE: 3/4" = 1'-0"

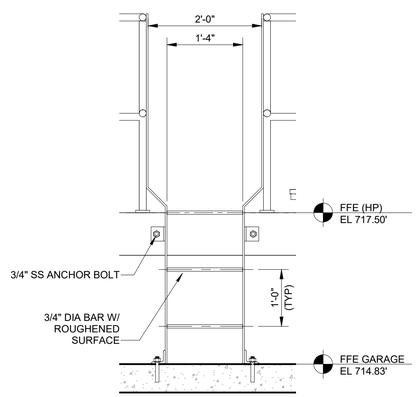

E S-105 LADDER SECTION
SCALE: 3/4" = 1'-0"

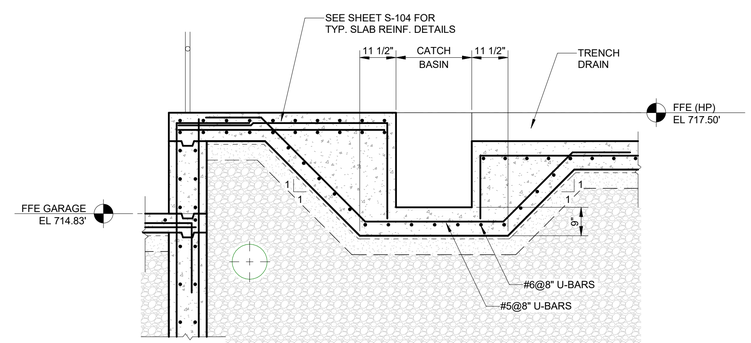

1 S-102 CATCH BASIN SECTION
SCALE: 1/2" = 1'-0"

REV#	DATE	DESCRIPTION	BY

CITY of FLINT MICHIGAN

WADE TRIM
555 South Saginaw Street, Suite 201
Flint, MI 48502
810.235.2555 / 800.841.0342
FAX: 810.235.4975
www.wadetrim.com

HRC
HUBBELL, ROTH & CLARK, INC
CONSULTING ENGINEERS SINCE 1915
555 HULET DRIVE
BLOOMFIELD HILLS, MICH.
P.O. BOX 824
48303 - 0824
PHONE: (248) 454-6300
FAX (1st. Floor): (248) 454-6312
FAX (2nd. Floor): (248) 338-2592
WEB SITE: http:// www.hrc-engr.com

CITY OF FLINT
WASTE UNLOADING STATION PROJECT

WASTE UNLOADING STATION - DETAILS

ISSUED FOR:	DATE:	BY:
BIDS	2023.06.24	TSW

JOB NO. COF1076.01F

SHEET
S-105

PLOTTED 6/21/2023 3:24:16 PM
BIM 360://COF1076-7-WPCF/WU_WT_S_R21.rvt

GENERAL REQUIREMENTS:

1. THE CONTRACTOR SHALL COORDINATE ALL WORK PRIOR TO INSTALLATION OR FABRICATION OF ANY COMPONENTS. ALL OPENINGS SHALL ALSO BE COORDINATED.

2. ALL WORK MUST CONFORM TO ALL STATUTES OF THE MICHIGAN BUILDING CODE (EDITION IN EFFECT AT THE TIME OF PERMIT), ALL STATE, COUNTY AND LOCAL ORDINANCES, CURRENT BARRIER FREE REGULATIONS, MIOSHA STRUCTURAL GUIDELINES, ASTM STANDARD TESTING PROCEDURES, OWNER'S PRACTICES AND GENERALLY ACCEPTED DESIGN PRACTICES. IF DISCREPANCIES IN DRAWING APPEAR, WORK MUST BE DONE PER CODE. CITY WILL COVER THE COST OF BUILDING, ELECTRICAL, MECHANICAL, AND PLUMBING PERMITS. CONTRACTOR MUST STILL APPLY FOR THE PERMITS.

3. EXISTING CONDITIONS OF BUILDING SHOWN ON CONSTRUCTION DOCUMENTS ARE ILLUSTRATIVE OF CONDITIONS VISIBLE TO ARCHITECT AND BASED ON EXISTING DRAWINGS. ALL EXISTING DIMENSIONS, CONDITIONS, SIZES & LOCATIONS ARE TO BE FIELD VERIFIED.

4. THE CONTRACTOR SHALL PROVIDE NEW OPENINGS AND SUPPORTS AS NOTED. FINAL OPENING DIMENSIONS, CONNECTION SIZES, CLEARANCES, ETC. MUST BE COORDINATED DURING CONSTRUCTION WITH APPROVED COMPONENTS. SEAL TIGHT ALL OPENINGS (ROOF, WALL AND CEILING), EQUIPMENT AND/OR PENETRATIONS - FROM AIR AND MOISTURE.

5. REFER TO SPECIFICATIONS FOR ADDITIONAL INFORMATION AND APPROVED MANUFACTURERS.

6. ALL INSTALLATIONS TO BE COORDINATED WITH EXISTING CONDITIONS FOR PROPER SIZE, LOCATION AND PROVISIONS REQUIRED TO INSTALL COMPONENTS.

7. PIPING & CONDUIT HANGERS AND SUPPORT LOCATION ARE NOT SHOWN ON DRAWINGS. THE CONTRACTOR SHALL PROVIDE THE PIPING AND CONDUIT HANGERS AND SUPPORTS NECESSARY AS REQUIRED PER CODE.

8. THE CONTRACTOR SHALL PROVIDE ALL REQUIRED TRANSITIONS, FITTINGS AND APPURTENANT CONNECTIONS.

9. THE CONTRACTOR SHALL KEEP THE SITE IN A NEAT AND ORDERLY CONDITION AND SHALL REMOVE RUBBISH DAILY OR AS DIRECTED BY OWNER. DUST CONTROL MEASURES ARE TO BE ERECTED BY THE CONTRACTOR TO PROTECT PATRONS AND VEHICLES DURING DEMOLITION AND CONSTRUCTION ACTIVITIES. ALL STAGING AND MATERIALS STORAGE IS TO BE COORDINATED WITH THE OWNER. THE CONTRACTOR SHALL TAKE PRECAUTIONS TO ISOLATE CONSTRUCTION ACTIVITIES FROM ADJACENT AREAS THAT ARE TO REMAIN IN OPERATION DURING CONSTRUCTION - CONFIRM SCHEDULE AND REQUIRED BARRICADES WITH OWNER PRIOR TO COMMENCEMENT.

10. CONFIRM ANY COLOR SELECTIONS WITH OWNER. COLORS TO COORDINATE WITH EXISTING BUILDINGS ON SITE.

11. PREVENT GALVANIC ACTION AND OTHER FORMS OF CORROSION BY INSULATING METALS OR OTHER MATERIALS FROM DIRECT CONTACT WITH INCOMPATIBLE MATERIALS.

12. SHOP DRAWINGS AND PRODUCT DATA - THE CONTRACTOR SHALL SUBMIT TO THE OWNER AND PROJECT ENGINEER, SHOP DRAWINGS & PRODUCT DATA SUBMITTALS FOR ALL PRODUCTS AND COMPONENTS TO BE USED ON THIS PROJECT. MAINTAIN ONE COPY OF ALL APPROVED SUBMITTALS AT THE SITE FOR THE OWNER'S REFERENCE.

13. "RECORD" DRAWINGS - THE CONTRACTOR SHALL MAINTAIN A SET OF "AS-BUILT" PRINTS, MARKED UP AT THE SITE, CONTAINING ALL "AS-BUILT" INFORMATION. TURN SET OVER TO ENGINEER UPON COMPLETION OF THE WORK.

14. INSTALL ALL MATERIALS IN COMPLIANCE W/ MFR. RECOMMENDATIONS AND CODE REQUIREMENTS.

15. CONTRACTOR MUST VERIFY ALL EXISTING UTILITY LOCATIONS PRIOR TO START OF DEMOLITION AND MAKE EVERY EFFORT TO PROTECT THEM OR RELOCATE AS REQUIRED.

16. ALL PERMANENT WOOD BLOCKING, SHEATHING, FRAMING, ETC. UTILIZED IN CONSTRUCTION TO BE FIRE RETARDANT TREATED.

17. PROVIDE ADDITIONAL BLOCKING TO MATCH EXISTING AT WALLS/ CEILINGS TO ACCOMMODATE NEW INSTALLATIONS. MAINTAIN FIRE RATED ASSEMBLIES AND FIRE STOPPING PER LOCAL GOVERNING CODES AND ORDINANCES.

18. ALL DEMO'D COMPONENTS TO BE PROTECTED AND CAREFULLY REMOVED FOR SALVAGE/ REUSE AS NOTED. DEMOLISHED ITEMS THAT ARE NOT TO BE REUSED ARE TO BE REMOVED FROM PROJECT SITE PROMPTLY AND DISPOSED OF IN ACCORDANCE WITH OWNER STANDARDS. PROTECT EXISTING FACILITIES IN A MANNER AS TO NOT ADVERSELY AFFECT THE EXISTING FACILITY'S OPERATIONS.

19. WORKING HOURS AT BUILDING ARE AT THE DISCRETION OF THE OWNER. CONFIRM AND ABIDE BY ALL SECURITY RESTRICTIONS AND LOGISTICS PRIOR TO START OF CONSTRUCTION.

20. COORDINATE ANY INTERRUPTIONS OF FACILITY OPERATIONS WITH OWNER PRIOR TO INTERRUPTION.

FIRE EXTINGUISHERS:
1. FIRE EXTINGUISHERS & ACCESSORIES: DRY CHEMICAL TYPE, UL299, HEAVY DUTY STEEL CYLINDER W/ PRESSURE GAGE; RECHARGEABLE UNIT; TYPE 10-A-120-B:C; PAINTED FINISH, COLOR RED. PROVIDE CHROMED STEEL MOUNTING BRACKETS & ALUM. WALL SIGNAGE (WHITE GOTHIC LETTERS ON RED BACKGROUND), BRADY SIGNAGE NO. 43294, 14X10, ALUM. PROVIDE WITH SIGNAGE ABOVE EXTINGUISHER. EXACT LOCATION TO BE DETERMINED BY FIRE MARSHALL & OWNER IN FIELD. PROVIDE (1) EXTINGUISHER WALL MOUNTED ON VALVE VAULT BLDG. INTERIOR ADJACENT TO THE EXTERIOR MANDOOR, WITH SIGNAGE ABOVE EXTINGUISHER - TOTAL OF (2) FIXTURES.

GENERAL NOTES:

1. PROVIDE TEMPORARY OPENING PROTECTION TO PREVENT FALLS AND WEATHER INTRUSION AT ALL HATCHES/ACCESS COVERS AND FLOOR/ROOF OPENINGS THAT ARE TO BE REMOVED OR MODIFIED AS PART OF THIS WORK.

2. REFER TO PLANS AND ELEVATIONS FOR ALL BUILDINGS TO DETERMINE SCOPE OF EXTERIOR AND INTERIOR MASONRY REPOINTING. VERIFY EXACT EXTENT OF REPAIR EFFORTS IN THE FIELD.

3. INTERIOR SPACES OF BUILDINGS AFFECTED BY THIS WORK SCOPE ARE TO BE CLEANED OF ALL DUST AND DEBRIS PRIOR TO FINAL CLOSE OUT OF JOB.

4. CONTRACTORS TO REFER TO ENTIRE SET OF DRAWINGS AND SPECIFICATIONS FOR FULL SCOPE OF WORK. CROSS COORDINATION BETWEEN CIVIL, PROCESS, MECHANICAL, ELECTRICAL, STRUCTURAL AND ARCHITECTURAL DRAWINGS IS REQUIRED.

ROOFING NOTES:

1. ONLY MAJOR ROOF PENETRATIONS & EQUIP. ARE SHOWN. THE ROOF PLAN REPRESENTS THE GENERAL WORK AREA ONLY. THE CONTRACTOR SHALL REFER TO DEMO SHEET, REFERENCE DWGS. & FIELD VERIFY ALL CONDITIONS, OPENINGS, ETC. PRIOR TO BEGINNING WORK, WHETHER OR NOT THEY ARE SPECIFICALLY SHOWN ON THIS PLAN OR REF DWGS.

2. WOOD USED IN ROOFING SHALL BE ACQ TREATED, SEE SPECS. FASTENERS SHALL BE TYPE 304 STAINLESS STEEL OR HOT DIPPED GALV. STEEL. ZINC OR CADMIUM PLATED NOT ACCEPTABLEF OR USE WITH ACQ TREATED LUMBER.

3. PROVIDE WALKWAY PADS FROM ROOF HATCH OR LADDER TO ALL H&V UNITS, FANS, ROOF SUMPS, ETC. IN THE MOST DIRECT ROUTE OF TRAVEL. VERIFY EXACT LAYOUT/LOCATIONS IN FIELD WITH OWNER.

4. NEW METAL PERIMETER EDGING SHALL BE INSTALLED. METALS FOR NEW FLASHING SHALL BE AS SPECIFIED IN SECTION 07 6000. REFER TO SECTIONS FOR WOOD NAILER LOCATIONS, ROOF EDGE CONDITIONS, ETC.

5. ALL CURBS SHALL BE INSTALLED TO MIN. 8" ABOVE TOP OF NEW ROOFING. INSTALL NEW MEMBRANE UP AND OVER CURBS, FASTEN TO INSIDE FACE OF CURBS PER ROOFING MFR. STANDARD DETAIL. ALL VENT PIPING TO BE INSTALLED AS REQ'D TO ACCOMMODATE SIM. FLASHING REQ'MENTS. (TYP.)

6. TAPERED INSULATION REQ'D IN AREAS INDICATED ON ROOF DWG. MAINTAIN MIN. SLOPE PER ROOFING MFR. WARRANTY REQUIREMENTS.

7. ROOF SADDLES ARE TO HAVE A MIN. SLOPE OF 1/2" PER FT. SLOPE (U.N.O.) PER ROOFING MFR. WARRANTY REQUIREMENTS.

8. PROVIDE CRICKETS ON HIGH SIDE OF ALL CURBED ITEMS. MIN 1/2" PER FOOT (U.N.O.) PER ROOFING MANUFACTURERS WARRANTY REQUIREMENTS.

9. ALL PENETRATIONS THROUGH ROOF ARE TO BE INSTALLED SUCH THAT THERE IS A MINIMUM OF 8" CLEAR HEIGHT ABOVE THE FINISHED ROOF SURFACE AVAILABLE FOR INSTALLIGN ROOFING FLASHINGS & TERMINATIONS PER MFR. REQUIREMENTS.

BUILDING DATA

APPLICABLE CODES:
2015 MICHIGAN BUILDING CODE (MBC)
2017 NATIONAL ELECTRIC CODE (NEC) WITH MICHIGAN AMENDMENTS
2015 MICHIGAN MECHANICAL CODE
2018 MICHIGAN PLUMBING CODE
2015 MICHIGAN UNIFORM ENERGY CODE
2015 MICHIGAN REHAB CODE FOR EXISTING BUILDINGS (MRCEB)
ICC ANSI A117.1 - 2009
2015 INTERNATIONAL FIRE CODE

TRAVEL DISTANCE (1016):
F-2 AREAS:
- DISTANCE TO AN EXIT ACCESS DOES NOT EXCEED 75 FEET FOR AREAS CONSTRUCTED UNDER THIS WORK WITH 1 EXIT.

ACCESSIBILITY (1103):
THIS BUILDING IS EXEMPT FROM ACCESSIBILITY REQUIREMENTS UNDER 1103.2.9. BUILDING IS AN UNOCCUPIED STRUCTURE FOR PROCESS EQUIPMENT, PART OF A SEWAGE TREATMENT SYSTEM. DOOR HARDWARE SHALL BE PROVIDED AS SPECIFIED AND INSTALLED IN ACCORDANCE WITH DIVISION 8 SPECIFICATIONS.

OCCUPANCY GROUP (306.3): FACTORY INDUSTRIAL F-2 LOW HAZARD OCCUPANCY

CONSTRUCTION TYPE (TABLE 601): IIB UNSPRINKLED

ALLOWABLE HEIGHT/AREA:	MAXIMUM	PROVIDED
FOOTPRINT AREA	23,000 SF	823 SF
HEIGHT	55' (3 STORIES)	20'-0" (1 STORY)

FLOOR AREA - GROSS S.F. (1002.1)

OCCUPANCY LOAD: OCCUPANCY CLASSIFICATION PER TABLE 1004.1.2 IS MECHANICAL EQUIPMENT, 300 GROSS S.F. PER OCCUPANT.

		NO. OF OCCUPANTS
WASTE ROOM	823 / 300 =	3

OCCUPANT LOAD MAY BE REDUCED BY CODE OFFICIAL TO REFLECT ACTUAL OCCUPANCY. BUILDING IS A NORMALLY UNOCCUPIED SPACE USED TO HOUSE PROCESS EQUIPMENT.

ENERGY CODE REQUIREMENTS (ASHRAE 90.1: 2013): SEMI-HEATED

	REQ'D	PROVIDED
ROOF INSULATION	R-30	R-30
MASS WALLS	CORE INSUL.	COMPLIES
DOORS	U-0.7	U-0.45
WINDOWS	U-0.62	COMPLIES
SLAB	R-10	R-11.4

(PER EX. B, FILL UNGROUTED CORES w/ MAT'L HAVING MAX. THERMAL CONDUCTIVITY OF 0.44 BTU-IN/H-FT2-F)

CLASS 1 / DIVISION 1 SPACE

DOOR SCHEDULE

DOOR NO.	DOOR LOCATION	SIZE (WxH)	TYPE	SILL DTL.	JAMB DTL.	HEAD DTL.	INT.	EXT.	DOOR MTL.	FRAME MTL.	HW/DR. SET	REMARK
1	WASTE UNLOADING	8'-0"x10'-0"	A	A/S-104	D/A-501	F/A-501		X	STL	STL	N/A	
2	WASTE UNLOADING	8'-0"x10'-0"	A	A/S-104	D/A-501	F/A-501		X	STL	STL	N/A	
3	WASTE UNLOADING	3'-0"x7'-10"	B	S1	J1	H1		X	STL	STL	1	PAINTED
4	WASTE UNLOADING	3'-0"x7'-10"	B	S1	J1	H1		X	STL	STL	1	PAINTED

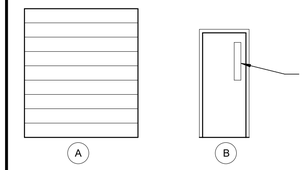

NOTES:
1. SEE SECTION 08 70 00 FOR DOOR HARDWARE.
2. SEE SECTIONS 08 11 50 AND 08 12 13 FOR STEEL DOORS AND FRAMES.
3. ALL FRAMES ARE 2" HIGH PROFILE, JAMS AND HEADS (U.N.O.)
4. PAINT DOORS AND FRAMES PER SPEC SECTION 09 96 00.

DOOR AND WINDOW NOTES:
1. FIELD VERIFY ALL DOOR AND WINDOW OPENING DIMENSIONS PRIOR TO FABRICATION.
2. ALL DOOR FRAMES SHALL BE GROUTED SOLID.
3. SEE SPECIFICATIONS FOR ADDITIONAL INFORMATIO NON DOORS, FRAMES, WINDOWS, AND HARDWARE.

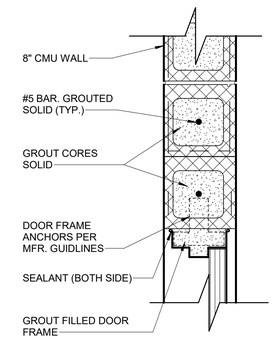

JAMB DETAIL J1
SCALE 1 1/2" = 1'-0"

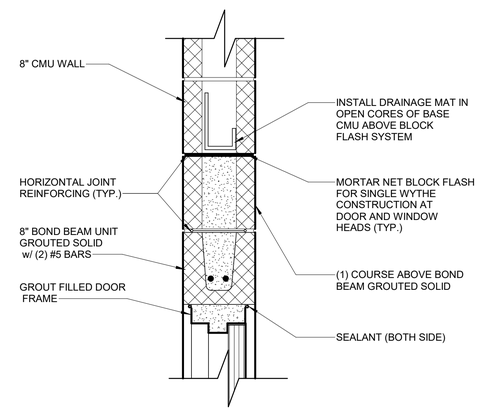

HEAD DETAIL H1
SCALE 1 1/2" = 1'-0"

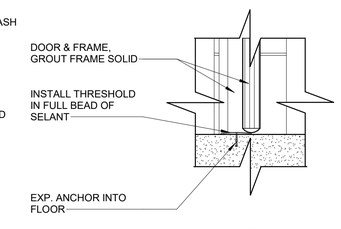

SILL DETAIL S1
SCALE 1 1/2" = 1'-0"

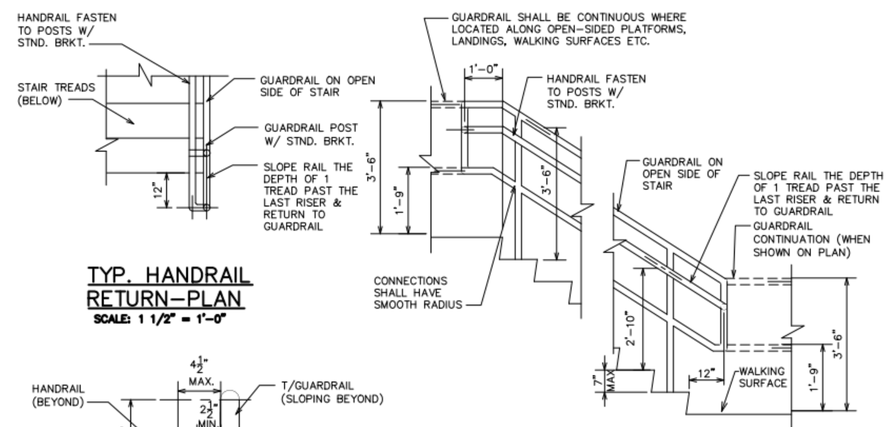

TYP. HANDRAIL RETURN-PLAN
SCALE: 1 1/2" = 1'-0"

TYP. GUARDRAIL/HANDRAIL ELEV.
SCALE: 1/2" = 1'-0"

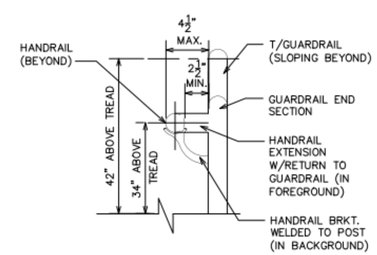

TYP. HANDRAIL RETURN-END VIEW
SCALE: 1 1/2" = 1'-0"

STAIR NOTES:
1. ALL DIMENSIONS ARE TO RAILING CENTERLINES. STAIR RAILING HEIGHTS ARE VERTICAL FROM NOSING EDGE TO INTERSECTION OF CENTERLINE.
2. STAIR CONSTRUCTION SHOWN IS GENERIC. SEE DWGS. FOR SPECIFIC STAIR ORIENTATION, LAYOUT, DETAILS ETC. SPECIFIC TO EACH STAIR. REFER TO SPECIFICATIONS AND STRUCTURAL DETAILS FOR FURTHER INFO.

REV#	DATE	DESCRIPTION	BY

WADE TRIM
555 South Saginaw Street, Suite 201
Flint, MI 48502
810.235.2555 / 800.841.0342
FAX: 810.235.4975
www.wadetrim.com

HRC
HUBBELL, ROTH & CLARK, INC
CONSULTING ENGINEERS SINCE 1915
555 HULET DRIVE, BLOOMFIELD HILLS, MICH. — P.O. BOX 824, 48303 - 0824
PHONE: (248) 454-6300
FAX (Tel. Fiber): (248) 454-6312
FAX (Tel. Fiber): (248) 338-2592
WEB SITE: http://www.hrc-eng.com

CITY OF FLINT
WPCF WASTE UNLOADING STATION

NOTES, SCHEDULES, AND DETAILS

ISSUED FOR:	DATE:	BY:
BIDS	2023.06.24	TSW

JOB NO. COF107601F

SHEET A-001

PLOTTED 6/21/2023 2:56:42 PM
BIM 360://COF1076-7-WPCF/WU_HRC_A_R21.rvt

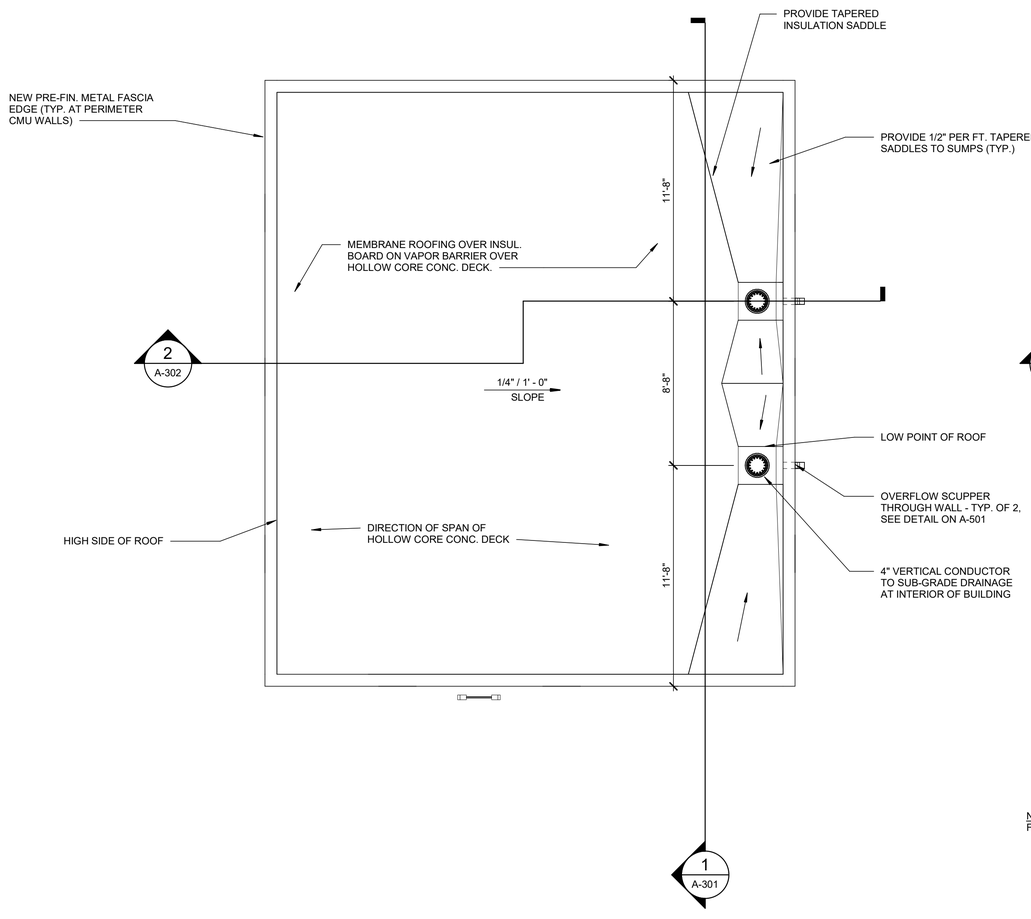

ROOF DECK

SCALE: 1/4" = 1'-0"

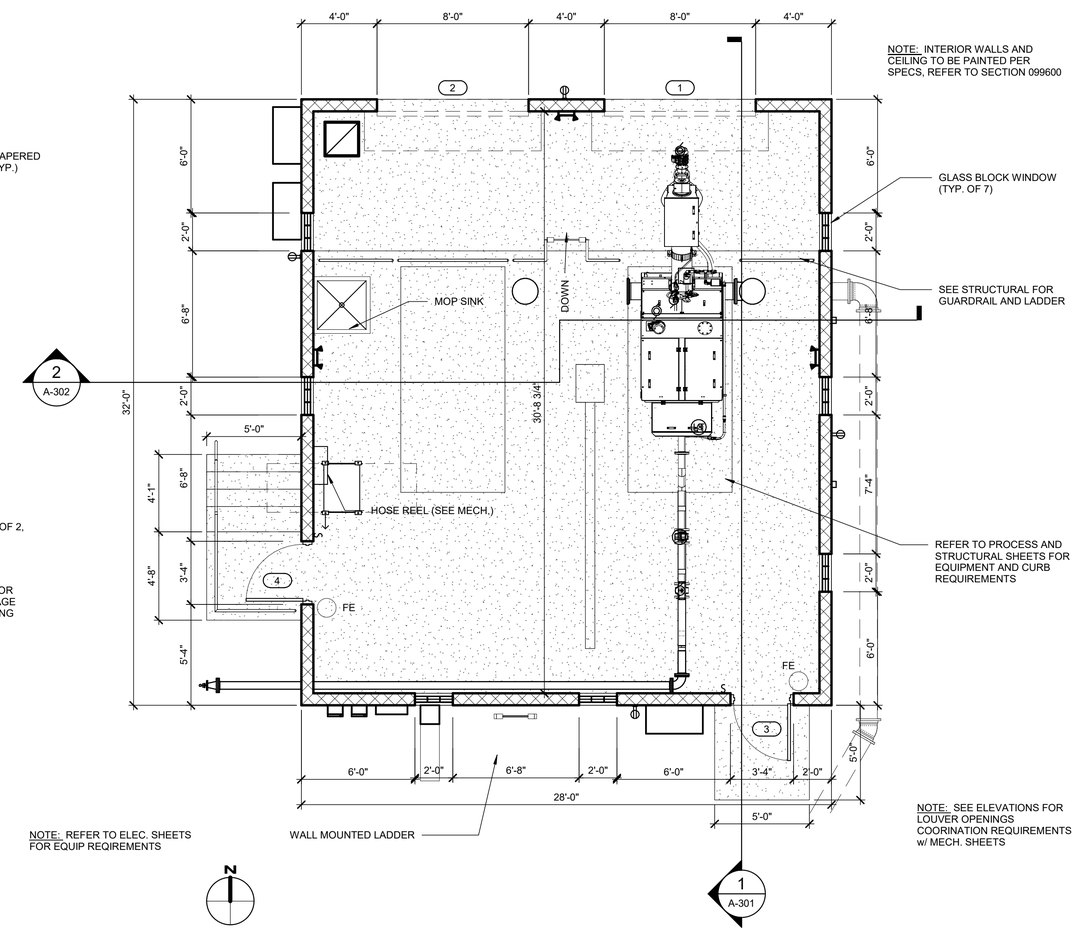

FLOOR PLAN

SCALE: 1/4" = 1'-0"

REV#	DATE	DESCRIPTION	BY

WADE TRIM
555 South Saginaw Street, Suite 201
Flint, MI 48502
810.235.2555 / 800.841.0342
FAX: 810.235.4975
www.wadetrim.com

HRC
HUBBELL, ROTH & CLARK, INC
CONSULTING ENGINEERS SINCE 1915
555 HULET DRIVE, BLOOMFIELD HILLS, MICH. — P.O. BOX 824, 48303 - 0824
PHONE: (248) 454-6300
FAX (1st. Floor): (248) 454-6312
FAX (2nd. Floor): (248) 338-2592
WEB SITE: http:// www.hrc-engr.com

CITY OF FLINT
WPCF WASTE UNLOADING STATION

FLOOR AND ROOF PLANS

ISSUED FOR:	DATE:	BY:
BIDS	2023.06.24	TSW

JOB NO. COF107601F

SHEET A-101

PLOTTED 6/21/2023 2:56:45 PM
BIM 360://COF107601-7-WPCF-WU_HRC_A_R21.rvt

ELEVATION NOTES

1	SPLIT FACED INTEGRALLY COLORED CMU WALL
2	GLASS BLOCK WINDOW - 8"x8" UNITS
3	PRE-FIN. METAL PARAPET CAP w/ CONCEALED CLEATS & HEMMED EDGE
4	PAINTED STEEL DOOR AND FRAME
5	OVERHEAD DOOR
6	EXTERIOR LIGHTS - REFER TO ELECTRICAL DWGS.
7	GALV. AND PTD. STEEL ROOF LADDER, REFER TO DETAIL, SHEET A-001
8	OVERFLOW SCUPPER w/ DOWNSPOUT
9	PRE-FIN. LOUVER (REFER TO MECH. DWGS.)
10	MASONRY CONTROL JOINT

SEE SPECIFICATIONS FOR ADDITIONAL INFORMATION AND REQUIREMENTS

PROVIDE WATER REPELLANT COATING AT EXTERIOR SIDE OF ALL CMU WALLS - REFER TO SPECIFICATIONS FOR INFORMATION.

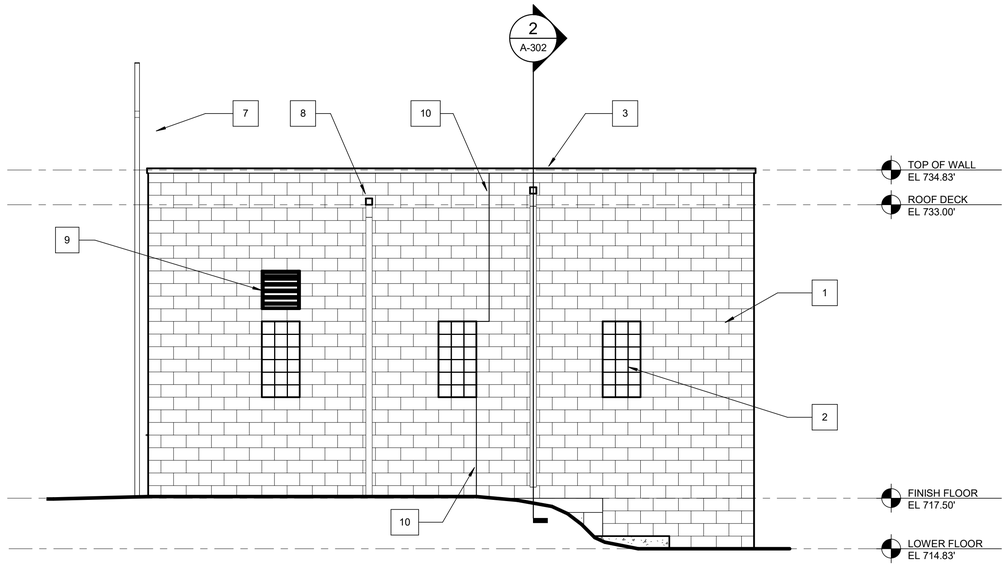

East Elevation

SCALE: 1/4" = 1'-0"

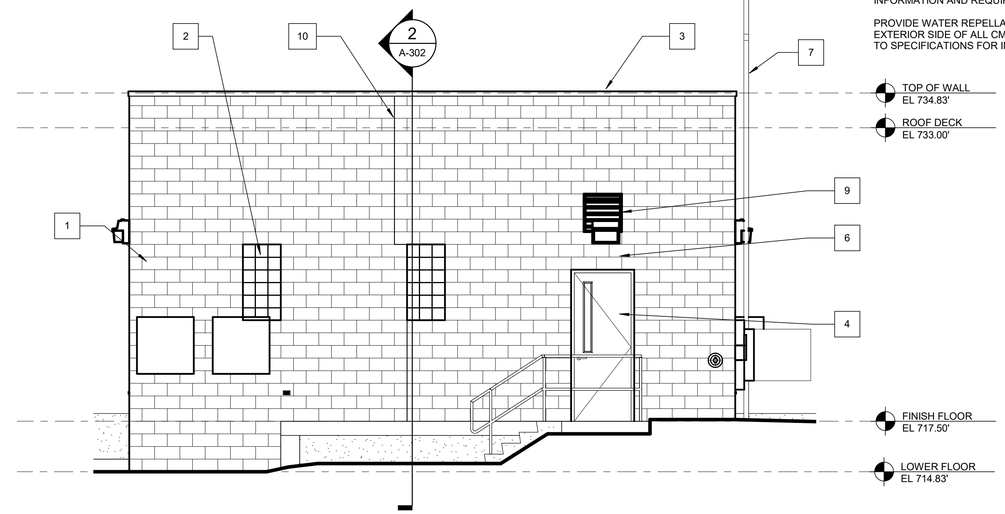

West Elevation

SCALE: 1/4" = 1'-0"

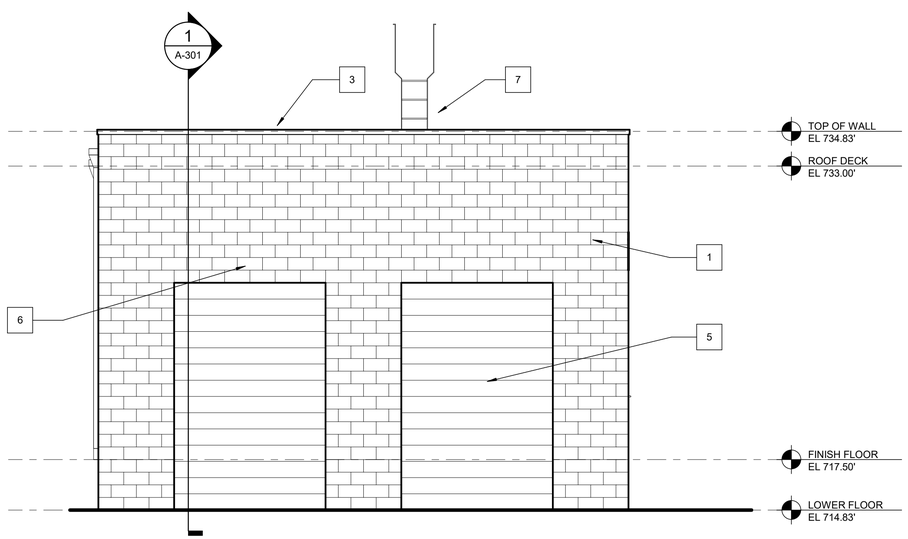

North Elevation

SCALE: 1/4" = 1'-0"

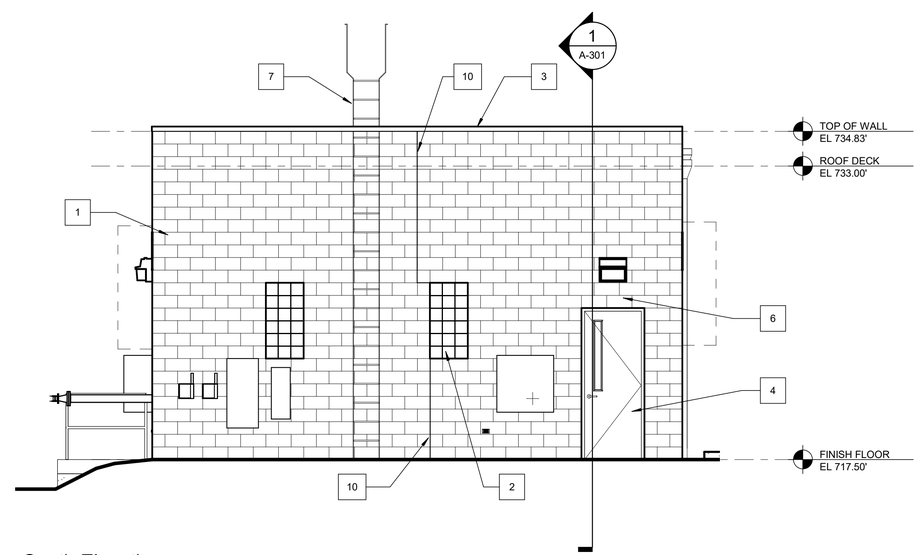

South Elevation

SCALE: 1/4" = 1'-0"

REV#	DATE	DESCRIPTION	BY

CITY of FLINT MICHIGAN

WADE TRIM
555 South Saginaw Street, Suite 201
Flint, MI 48502
810.235.2555 / 800.841.0342
FAX: 810.235.4975
www.wadetrim.com

HRC
HUBBELL, ROTH & CLARK, INC
CONSULTING ENGINEERS SINCE 1915
555 HULET DRIVE
BLOOMFIELD HILLS, MICH.
P.O. BOX 824
48303 - 0824
PHONE: (248) 454-6300
FAX (1st. Floor): (248) 454-6312
FAX (2nd. Floor): (248) 338-2592
WEB SITE: http:// www.hrc-engr.com

CITY OF FLINT
WPCF WASTE UNLOADING STATION

ELEVATIONS

ISSUED FOR:	DATE:	BY:
BIDS	2023.06.24	TSW

JOB NO. COF107601F

SHEET A-201

PLOTTED 6/21/2023 2:56:46 PM
BIM 360://COF107601-7-WPCF/WU_HRC_A_R21.rvt

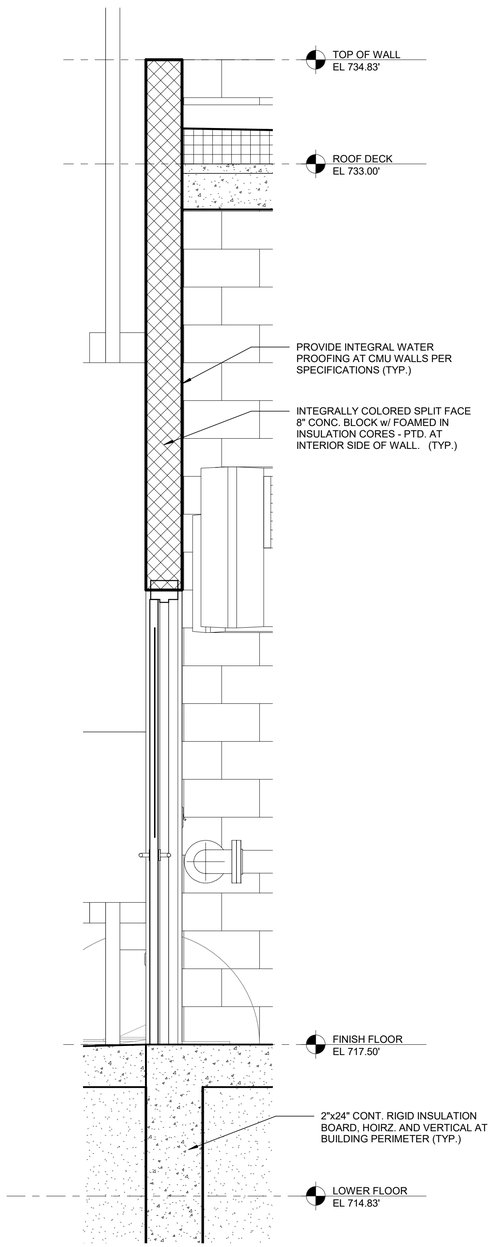

A A-301 WALL SECTION 1
SCALE: 3/4" = 1'-0"

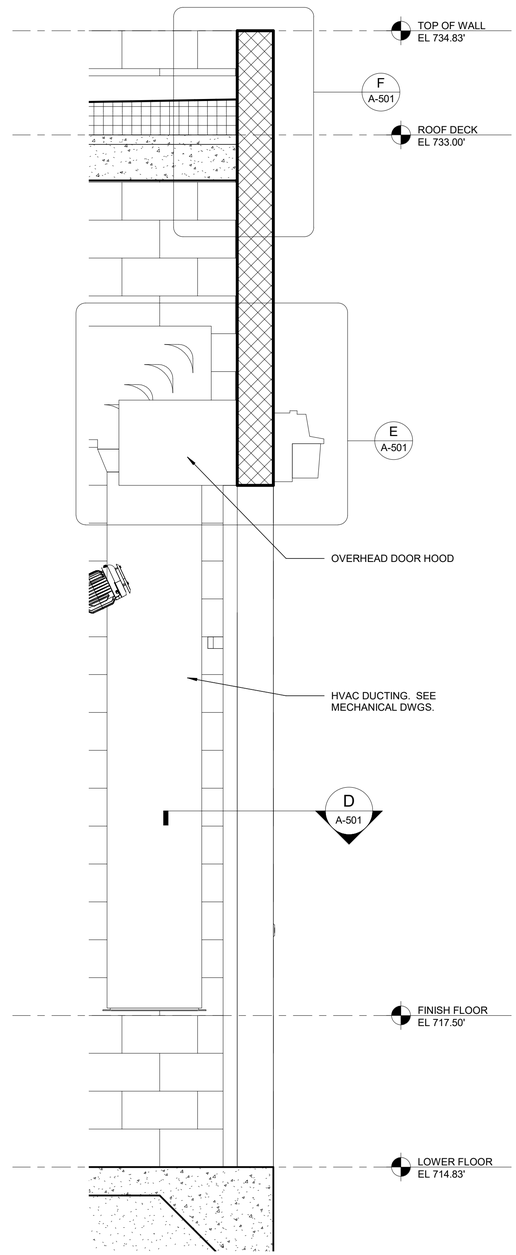

B A-301 WALL SECTION 2
SCALE: 3/4" = 1'-0"

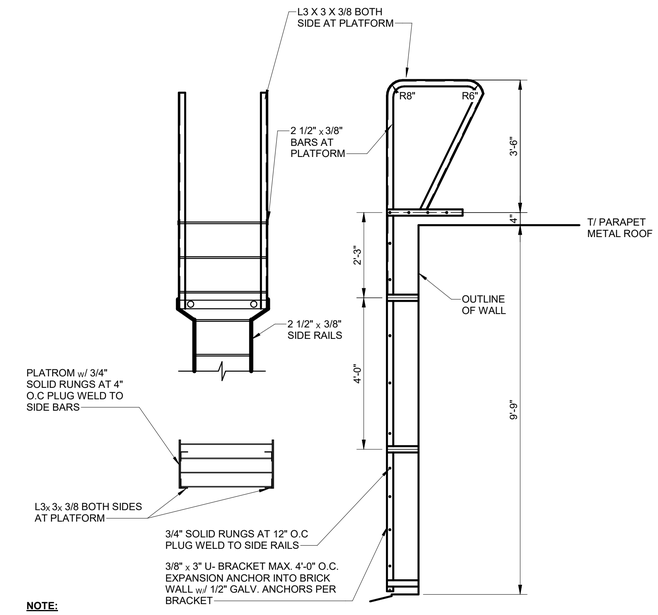

NOTE:

LADDER ASSEMBLY SHALL BE G90 HOT-DIP GALV. ANGLE SHALL BE CUT & WELDED AS NECESSARY TO PROVIDE RADIUS SHOWN PRIOR TO GALVANIZING. FIELD PAINT LADDER OWNER SELECTED COLOR.

** FIELD VERIFY FINAL FIELD ELEV. BOTTOM RUNG SHALL NOT BE MORE THAN 12" ABOVE FINISH GRADE

TYP. ROOF LADDER
SCALE 1/2" = 1'-0"

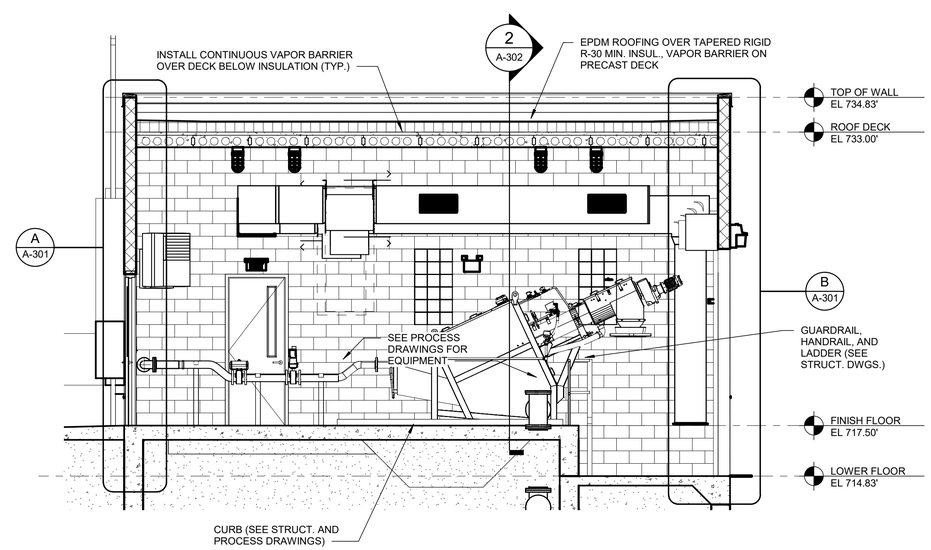

BUILDING SECTION 1
SCALE: 1/4" = 1'-0"

REV#	DATE	DESCRIPTION	BY

WADE TRIM
555 South Saginaw Street, Suite 201
Flint, MI 48502
810.235.2555 / 800.841.0342
FAX: 810.235.4975
www.wadetrim.com

HRC
HUBBELL, ROTH & CLARK, INC
CONSULTING ENGINEERS SINCE 1915
555 HULET DRIVE
BLOOMFIELD HILLS, MICH.
P.O. BOX 824
48303 - 0824
PHONE: (248) 454-6300
FAX (1st. Floor): (248) 454-6312
FAX (2nd. Floor): (248) 338-2592
WEB SITE: http:// www.hrc-engr.com

CITY OF FLINT
WPCF WASTE UNLOADING STATION

BUILDING AND WALL SECTIONS

ISSUED FOR:	DATE:	BY:
BIDS	2023.06.24	TSW

JOB NO. COF107601F

SHEET A-301

PLOTTED 6/21/2023 2:56:52 PM

BIM 360://COF1076-7-WPCF-WU_HRC_A_R21.rvt

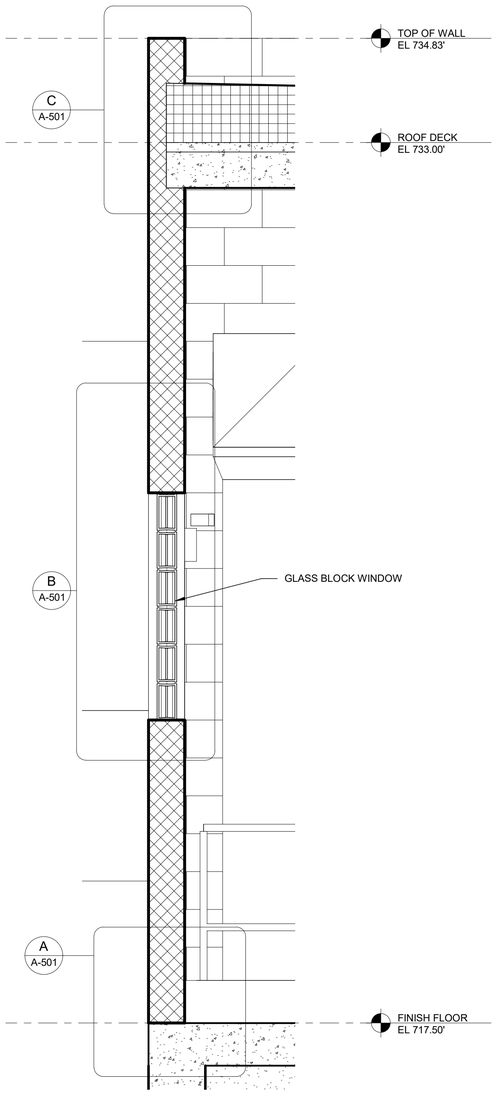

A / A-302 WALL SECTION 3
SCALE: 3/4" = 1'-0"

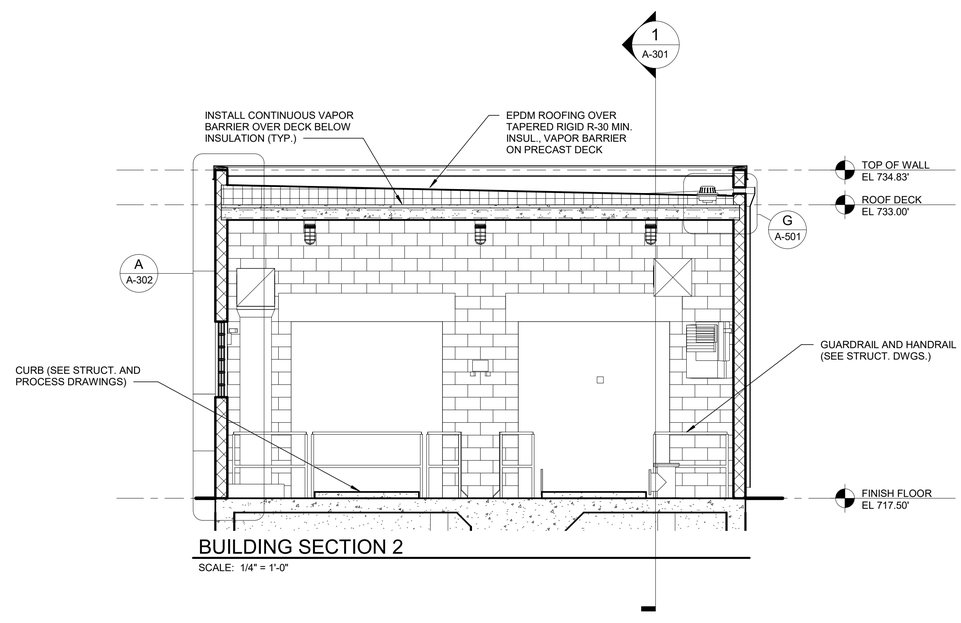

BUILDING SECTION 2
SCALE: 1/4" = 1'-0"

REV#	DATE	DESCRIPTION	BY

WADE TRIM
555 South Saginaw Street, Suite 201
Flint, MI 48502
810.235.2555 / 800.841.0342
FAX: 810.235.4975
www.wadetrim.com

HRC
HUBBELL, ROTH & CLARK, INC
CONSULTING ENGINEERS SINCE 1915
555 HULET DRIVE
BLOOMFIELD HILLS, MICH.
P.O. BOX 824
48303 - 0824
PHONE: (248) 454-6300
FAX (1st. Floor): (248) 454-6312
FAX (2nd. Floor): (248) 338-2592
WEB SITE: http:// www.hrc-eng.com

CITY OF FLINT
WPCF WASTE UNLOADING STATION

BUILDING AND WALL SECTIONS

ISSUED FOR:	DATE:	BY:
BIDS	2023.06.24	TSW

JOB NO
COF107601F

SHEET
A-302

PLOTTED 6/21/2023 2:56:52 PM
BIM 360://COF1076-7-WPCF/WU_HRC_A_R21.rvt

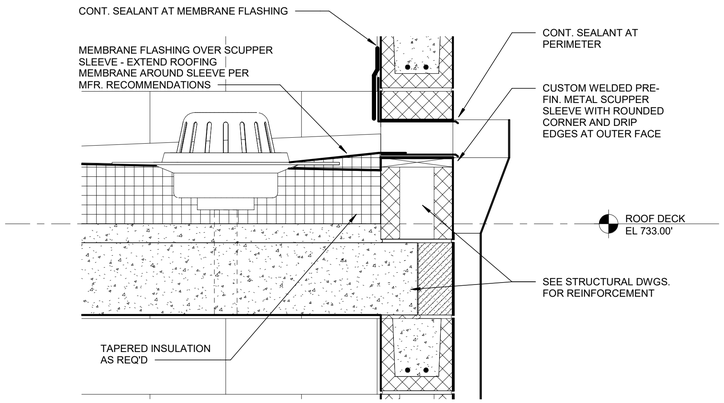

G A-302 ROOF SUMP AND OVERFLOW SCUPPER
SCALE: 1 1/2" = 1'-0"

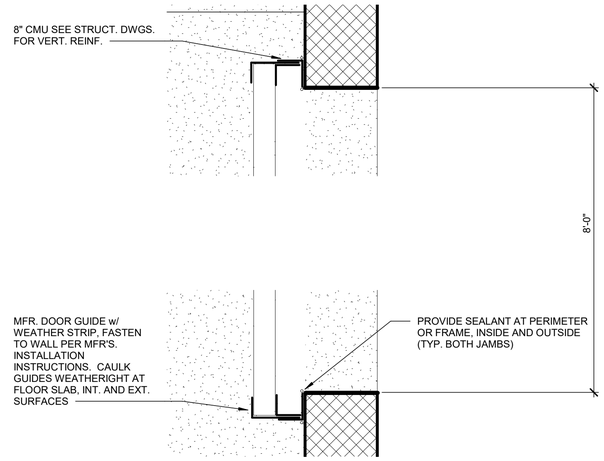

D A-301 OVERHEAD DOOR JAMB
SCALE: 1 1/2" = 1'-0"

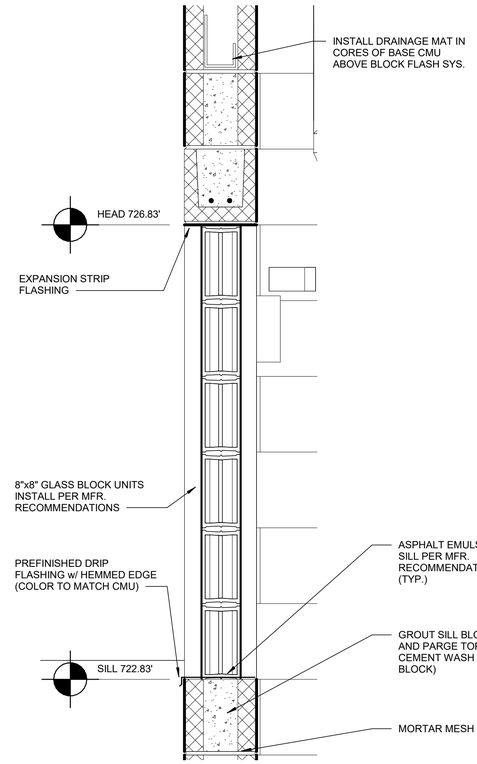

B A-302 TYPICAL GALZED BLOCK WINDOW
SCALE: 1 1/2" = 1'-0"

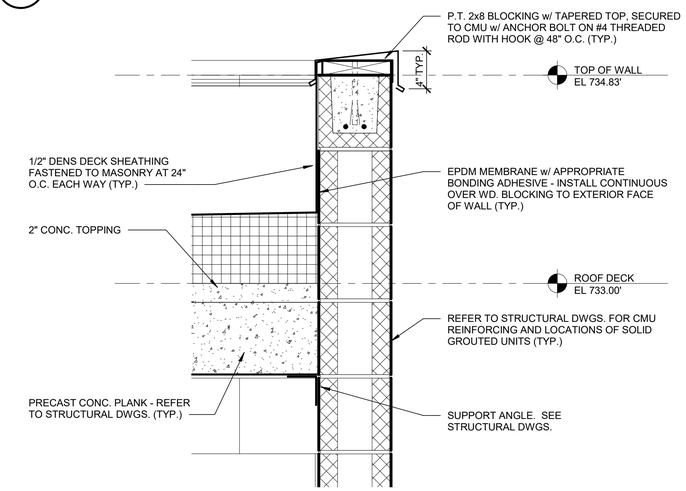

F A-301 TYPICAL PARAPET NON-BEARING SIDE
SCALE: 1 1/2" = 1'-0"

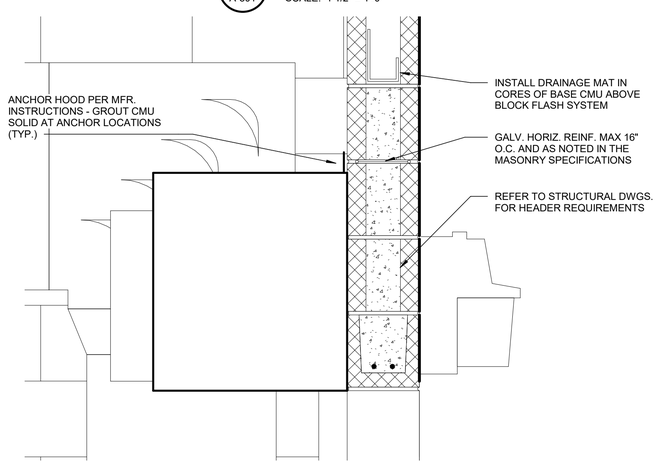

E A-301 OVERHEAD DOOR HEAD
SCALE: 1 1/2" = 1'-0"

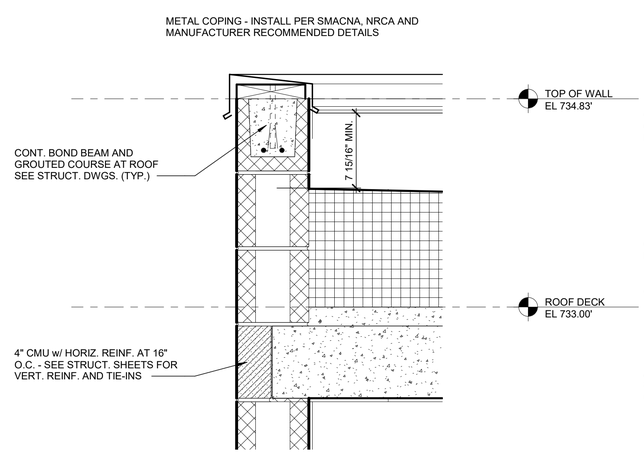

C A-302 TYPICAL PARAPET BEARING SIDE
SCALE: 1 1/2" = 1'-0"

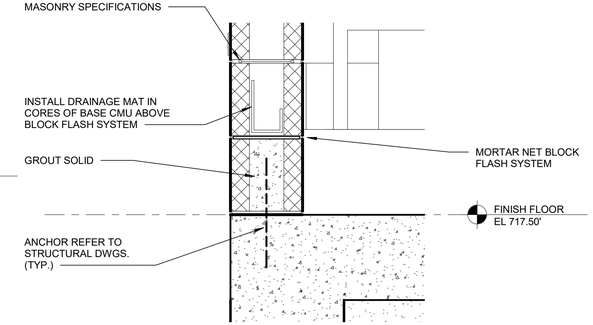

A A-302 TYPICAL WALL BASE
SCALE: 1 1/2" = 1'-0"

REV#	DATE	DESCRIPTION	BY

WADE TRIM
555 South Saginaw Street, Suite 201
Flint, MI 48502
810.235.2555 / 800.841.0342
FAX: 810.235.4975
www.wadetrim.com

HRC
HUBBELL, ROTH & CLARK, INC
CONSULTING ENGINEERS SINCE 1915
555 HULET DRIVE
BLOOMFIELD HILLS, MICH.
P.O. BOX 824
48303 - 0824
PHONE: (248) 454-6300
FAX (Tel. Fiber): (248) 454-6312
FAX (Dat. Fiber): (248) 338-2592
WEB SITE: http:// www.hrc-engr.com

CITY OF FLINT
WPCF WASTE UNLOADING STATION

DETAILS

ISSUED FOR:	DATE:	BY:
BIDS	2023.06.24	TSW

JOB NO. COF107601F

SHEET A-501

PLOTTED 6/21/2023 2:56:52 PM
BIM 360://COF107601-7-WPCF/WU_HRC_A_R21.rvt

ABBREVIATIONS - PIPING

AFF	ABOVE FINISHED FLOOR
AL	ALUMINUM
ARV	AIR RELIEF VALVE
BCE	BIOLOGICAL CONTACTOR EFFLUENT
BF	BLIND FLANGE
BP	BYPASS
C	CENTRATE
CA	COMPRESSED AIR
CDS	CHEMICAL DOSING
CE	CHLORINATED EFFLUENT
CI	CAST IRON
CIP	CAST IRON PIPE
CISP	CAST IRON SOIL PIPE
CL	CENTER LINE
CON	CONCENTRATE
CON RED	CONCENTRIC REDUCER
CONC	CONCRETE
CPVC	CHLORINATED POLYVINYL CHLORIDE
CUP	COPPER PIPE
CW	COLD WATER
D	DRAIN
DE	DECANT
DI	DUCTILE IRON
DIP	DUCTILE IRON PIPE
DMJ	DISMANTLING JOINT
DS	DIGESTED SLUDGE
ECC	ECCENTRIC
ECC RED	ECCENTRIC REDUCER
ED	EQUIPMENT DRAIN
EFF	EFFLUENT
EI	EQUALIZATION TANK INFLUENT
EL	ELEVATION
ELB	ELBOW
ER	EQUALIZATION TANK RETURN
ES	EQUALIZATION TANK SLUDGE
FA	FOUL AIR
FCA	FLANGED COUPLING ADAPTER
FD	FLOOR DRAIN
FE	FINAL EFFLUENT
FFWD	FEED FORWARD
FLG	FLANGE
FM	FORCE MAIN
FOB	FLAT ON BOTTOM
FOT	FLAT ON TOP
FRP	FIBERGLASS REINFORCED PIPE
FS	FINAL TANK SLUDGE
FTW	FILTER TO WASTE
GRS	GREASE
GRT	GRIT
GRV	GROOVED JOINT
GSP	GALVANIZED STEEL PIPE
GW	GLAND WATER
HDPE	HIGH DENSITY POLYETHYLENE PIPE
HS	HEATED SLUDGE
INF	INFLUENT
INV	INVERT
IR	INFRARED
LPA	LOW PRESSURE AIR
LR	LONG RADIUS
MBR	MEMBRANE BIOREACTOR

ABBREVIATIONS - PIPING

MFR	MANUFACTURER
MH	MANHOLE
MJ	MECHANICAL JOINT
ML	MIXED LIQUOR
MLP	MAIN LIFT PUMP
NaOCl	SODIUM HYPOCHLORITE
NC	NORMALLY CLOSED
NO	NORMALLY OPEN
NPW	NON-POTABLE WATER
OVRFL	OVERFLOW
PA	PROCESS AIR
PE	PRIMARY TANK EFFLUENT
PEP	POLYETHYLENE PIPE
PERM	PERMEATE
PEW	PLANT EFFLUENT WATER
PI	PRIMARY TANK INFLUENT
PLT	PLATE
POA	PULLOUT ASSEMBLY
PP	POLYPROPYLENE PIPE
PS	PRIMARY TANK SLUDGE
PVC	POLYVINYL CHLORIDE
PW	POTABLE WATER
RAS	RETURN ACTIVATED SLUDGE
RC	RECYCLED
RCP	REINFORCED CONCRETE PIPE
RDMJ	RESTRAINED DISMANTLING JOINT
RECYC	INTERNAL RECYCLE
RED	REDUCER
REW	REUSE WATER
RFCA	RESTRAINED FLANGED COUPLING ADAPTER
RO	REVERSE OSMOSIS
RS	RAW SEWAGE
RW	RAW WATER
S	SCUM
SAM	SAMPLE
SE	SECONDARY EFFLUENT
SFE	SECONDARY FINAL EFFLUENT
SN	SUPERNATANT
SPD	SUMP PUMP DISCHARGE
SS or SST	STAINLESS STEEL
STL	STEEL PIPE
SW	SECONDARY WASTE
SWHP	SECONDARY WATER - HIGH PRESSURE
SWLP	SECONDARY WATER - LOW PRESSURE
SWMP	SECONDARY WATER - MEDIUM PRESSURE
SWP	SEAL WATER PANEL
TE	TERTIARY EFFLUENT
THD	THREADED
THS	THICKENED SLUDGE
TO	THICKENER OVERFLOW
TOR	THERMAL OIL RETURN
TOS	THERMAL OIL SUPPLY
TS	TRANSFER SLUDGE
UNO	UNLESS NOTED OTHERWISE
UWF	UNFILTERED WATER FLUSH
V	VENT
VIF	VERIFY IN FIELD
WAS	WASTE ACTIVATED SLUDGE
WM	WATER MAIN
WWD	WASHWATER DRAIN
WWS	WASHWATER SUPPLY

PIPING & EQUIPMENT SYMBOLS

VTR	VENT TO ROOF
	PIPE ANCHOR
	EXPANSION JOINT
	EXPANSION COMPENSATOR
	FLEXIBLE CONNECTOR
FE	FLOW ELEMENT
	PIPE GUIDE
YH	YARD HYDRANT
PRS	PRESSURE REDUCING STATION
SEAL	PUMP SEALING WATER CONNECTION
	SAMPLE FUNNEL
LBS	AIR SET ASSEMBLY
A-TH	AIR TO VALVE OPERATOR (THROTTLING SERVICE)
A-OS	AIR TO VALVE OPERATOR (OPEN SHUT SERVICE)
MIX	IN LINE STATIC MIXER
E	EDUCTOR
I	INJECTOR
	TRAP (STEAM OR AIR MOISTURE)
QD	QUICK DISCONNECT (AIR) (3/4")
	ELBOW UP
	ELBOW DOWN
	TEE UP
	TEE DOWN
	REDUCER-CONCENTRIC
	REDUCER-ECCENTRIC
	WYE STRAINER
	BASKET STRAINER
	UNION
M	METER (TOTALIZING)
	ROTAMETER
	STEEL WALL SLEEVE
ES	EMERGENCY SHOWER AND EYEWASH
	PIPING (BELOW SLAB)
FD	FLOOR DRAIN
FD/SB	FLOOR DRAIN W/SEDIMENT BUCKET
FS	FLOOR SINK
PBD	PUMP BASE DRAIN
E D	EQUIPMENT DRAIN
C O	CLEANOUT-FLOOR
C O	CLEANOUT-HORIZONTAL
RD	ROOF DRAIN
D	PIPE TO DRAIN
P	IN-LINE PUMP
	INSTRUMENT AIR PNEUMATIC SIGNAL
	ELECTRIC
	INSTRUMENT CAPILLARY TUBING
BFP D	BACKFLOW PREVENTER
	CONNECTION TO EXISTING
	PIPE CAP OR PLUG
	DIRECTION OF FLOW
EFM	ELBOW FLOW METER

SLEEVE DESIGNATIONS

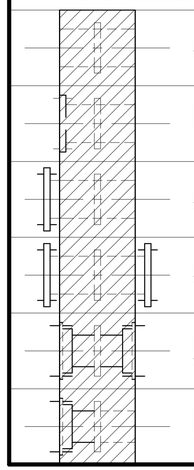

PLAIN END x PLAIN END WALL SLEEVE

RECESSED FLANGE x PLAIN END WALL SLEEVE

FLANGE x PLAIN END WALL SLEEVE

FLANGE x FLANGE WALL SLEEVE

MECHANICAL JOINT x MECHANICAL JOINT WALL SLEEVE

MECHANICAL JOINT x PLAIN END WALL SLEEVE

VALVE SYMBOLS

	TRIPLE DUTY VALVE
	GATE VALVE
	GLOBE VALVE
	BALL VALVE
	BUTTERFLY VALVE
	CORPORATION COCK
	BALANCING VALVE
	PET COCK
	CHECK VALVE
	PLUG VALVE
	STOP AND CHECK VALVE
	PINCH VALVE
	DIAPHRAGM VALVE
	AUTO-FLOW CONTROL VALVE
	ANGLE OR NEEDLE VALVE
	PRESSURE RELIEF VALVE
	THREE WAY VALVE
	TEMPERING VALVE
S	SOLENOID OPERATED VALVE
	PRESSURE REGULATING VALVE (SELF CONTAINED)
M	MOTORIZED CONTROL VALVE (OPEN-SHUT, THROTTLING)
	PNEUMATIC OPERATED CONTROL VALVE (OPEN-SHUT, THROTTLING)
BP	BACKPRESSURE VALVE
HB	HOSE BIBB (3/4")
HR	HOSE REEL (3/4")
FHB	FLUSHING HOSE BIBB (1-1/2")
SC	SILL COCK (3/4")
FC	FLUSHING CONNECTION (ON PIPE) 1-1/2"
ASV	ANTISIPHON VALVE

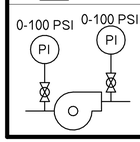

PUMP/BLOWER INCLUDING PRESSURE GAUGES

PI = PRESSURE GAUGE

PI-D = PRESSURE GAUGE W/ DIAPHRAGM SEAL

PI-P = PRESSURE GAUGE W/ PULSATION DAMPER

GENERAL PIPING NOTES

A	LAY PIPE TO UNIFORM GRADE BETWEEN INDICATED ELEVATION POINTS.
B	UNLESS NOTED OTHERWISE, PIPE ELEVATIONS SHOWN ON PIPING DRAWINGS REFER TO CENTERLINE OF PIPE.
C	SUBMIT THE ROUTING OF PIPING NOT SHOWN IN THE DRAWINGS FOR APPROVAL, INCLUDING PIPING SMALLER THAN 3 INCHES.
D	SIZE OF FITTINGS SHOWN ON DRAWINGS SHALL CORRESPOND TO ADJACENT STRAIGHT RUN OF PIPE, UNLESS NOTED OTHERWISE. TYPE OF JOINT AND FITTING MATERIAL SHALL BE THE SAME AS SHOWN FOR ADJACENT STRAIGHT RUN OF PIPE.
E	LOCATIONS AND NUMBER OF PIPE HANGERS AND PIPE SUPPORTS SHOWN ARE APPROXIMATE. CONTRACTOR SHALL DESIGN AND PROVIDE PIPE SUPPORTS AS SPECIFIED.
F	ALL JOINTS SHALL BE WATERTIGHT. WALL PIPES SHALL BE USED WHEREVER PIPING PASSES FROM A STRUCTURE TO BACKFILL OR THROUGH WATERTIGHT STRUCTURE.
G	ALL FLEXIBLE CONNECTORS AND COUPLING ADAPTERS SHALL BE PROVIDED WITH THRUST PROTECTION AS SPECIFIED, UNLESS NOTED OTHERWISE. THRUST PROTECTION SHALL BE ADEQUATE FOR TEST PRESSURES SPECIFIED.
H	NOT ALL OF THE GRAPHICS, ABBREVEATIONS, ETC., SHOWN ON THIS SHEET ARE USED ON THE PROJECT.
I	NUMBER AND LOCATION OF UNIONS SHOWN ON DRAWINGS ARE APPROXIMATE. PROVIDE ALL UNIONS NECESSARY TO FACILITATE CONVENIENT REMOVAL OF VALVES AND MECHANICAL EQUIPMENT.
J	WHERE A GROOVED END COUPLING IS SHOWN, IT SHALL BE THE RIGID JOINT TYPE, UNLESS OTHERWISE SPECIFIED. WHERE A FLANGED COUPLING ADAPTER IS SHOWN, A STANDARD FLANGE SHALL BE JOINED TO THE COUPLING ADAPTER.
K	LOCATE PRESSURE TAPS ON THE TOP OF PROCESS PIPES.
L	LOCATE SAMPLE TAPS ON THE SIDE OF PROCESS PIPES.
M	LOCATE DRAIN TAPS ON THE BOTTOM OF PROCESS PIPES.
N	INSTALL ALL PLUG, BUTTERFLY, AND BALL VALVES WITH THE SHAFT IN THE HORIZONTAL POSITION, UNLESS NOTED OTHERWISE.
O	ALL MECHANICAL AND PROCESS EQUIPMENT SHALL BE PLACED ON CONCRETE HOUSEKEEPING PADS, WHETHER INDICATED OR NOT. SEE STRUCTURAL SHEETS FOR TYPICAL DETAILS.
P	VERTICAL ELEVATIONS ARE PROVIDED IN THE CITY OF DETROIT DATUM. ALL OTHER ELEVATIONS ARE PROVIDED IN NAVD88. THE CONVERSION FROM THE CITY OF DETROIT DATUM TO NAVD88 IS 479.20'.

REV#	DATE	DESCRIPTION	BY

WADE TRIM
555 South Saginaw Street, Suite 201
Flint, MI 48502
810.235.2555 / 800.841.0342
FAX: 810.235.4975
www.wadetrim.com

HRC
HUBBELL, ROTH & CLARK, INC
CONSULTING ENGINEERS SINCE 1915
555 HULET DRIVE, BLOOMFIELD HILLS, MICH. — P.O. BOX 824, 48303 - 0824
PHONE: (248) 454-6300
FAX (1st. Floor): (248) 454-6312
FAX (2nd. Floor): (248) 338-2592
WEB SITE: http:// www.hrc-engr.com

CITY OF FLINT WPCF WASTE UNLOADING STATION PROJECT

PLUMBING GENERAL NOTES, SYMBOLS AND ABBREVIATIONS

ISSUED FOR:	DATE:	BY:
BIDS	2023.06.24	TSW

JOB NO. COF107601F

SHEET P-001

PLOTTED 6/23/2023 7:52:36 AM

BIM 360://COF1076-7-WPCF/WU_WT_M_R21.rvt

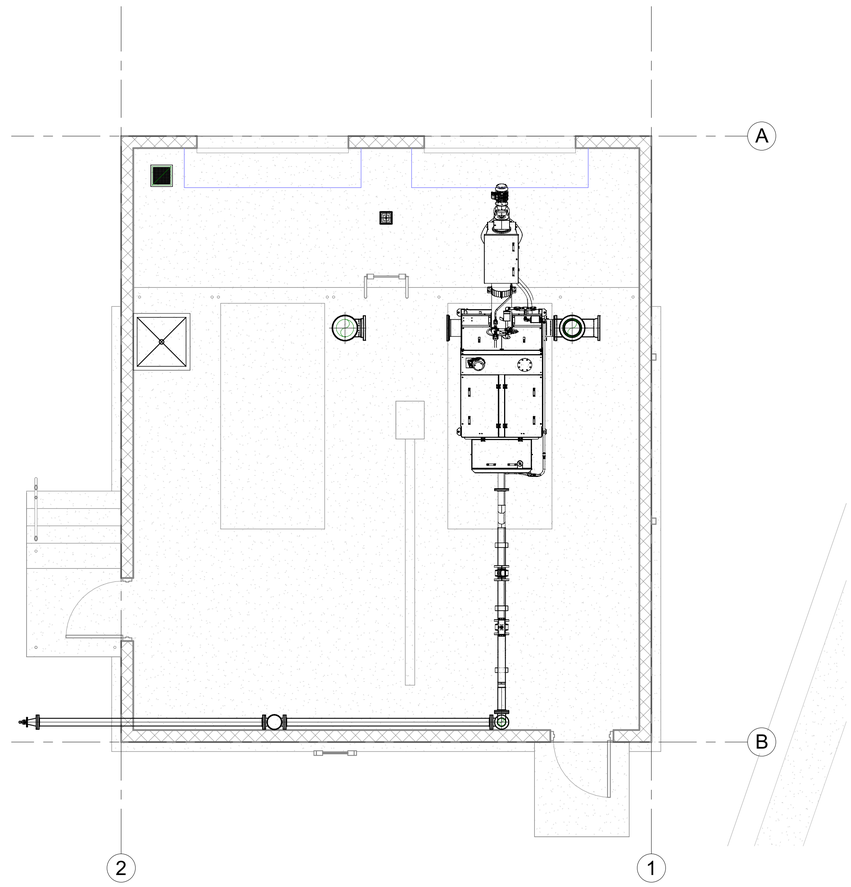

PLUMBING PLAN

SCALE: 1/4" = 1'-0"

REV#	DATE	DESCRIPTION	BY

WADE TRIM
555 South Saginaw Street, Suite 201
Flint, MI 48502
810.235.2555 / 800.841.0342
FAX: 810.235.4975
www.wadetrim.com

HRC
HUBBELL, ROTH & CLARK, INC
CONSULTING ENGINEERS SINCE 1915
555 HULET DRIVE
BLOOMFIELD HILLS, MICH.
P.O. BOX 824
48303 - 0824
PHONE: (248) 454-6300
FAX (1st. Floor): (248) 454-6312
FAX (2nd. Floor): (248) 338-2592
WEB SITE: http:// www.hrc-engr.com

CITY OF FLINT WPCF
WASTE UNLOADING STATION PROJECT

PLUMBING PLAN

ISSUED FOR:	DATE:	BY:
BIDS	2023.06.24	TSW

JOB NO.
COF107601F

SHEET
P-101

PLOTTED 6/23/2023 7:52:55 AM

BIM 360://COF107601-WPCF/WU_WT_M_R21.rvt

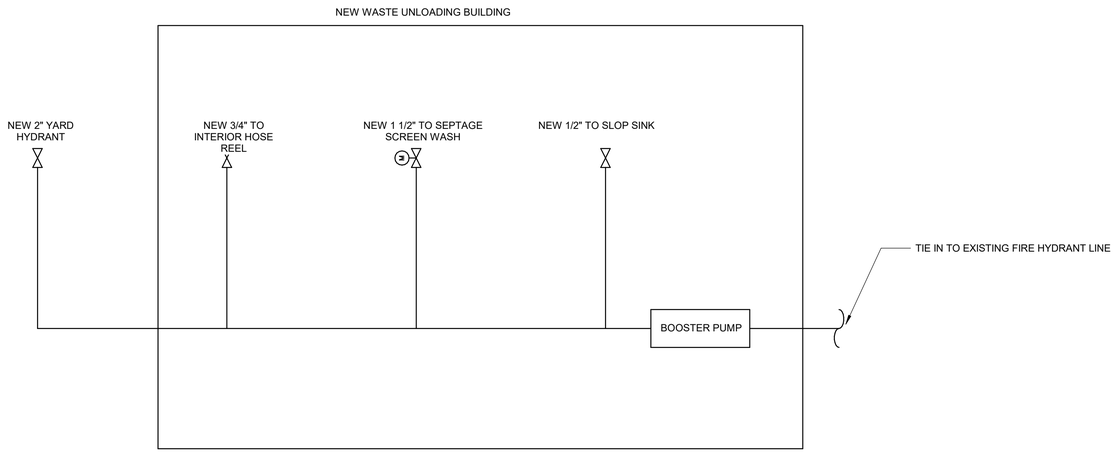

1 P-601 NON-POTABLE WATER SCHEMATIC

NOT TO SCALE

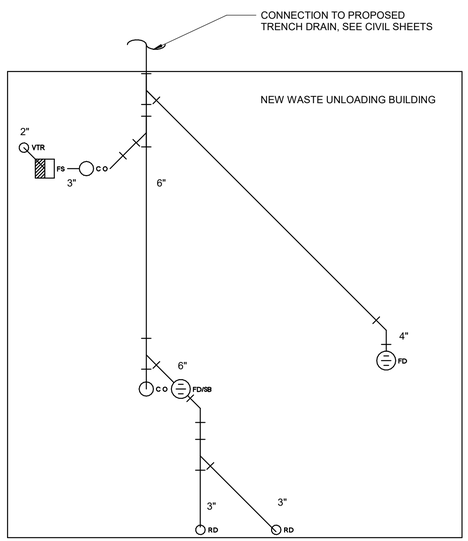

2 P-601 WASTE AND VENT SCHEMATIC

NOT TO SCALE

REV#	DATE	DESCRIPTION	BY

WADE TRIM
555 South Saginaw Street, Suite 201
Flint, MI 48502
810.235.2555 / 800.841.0342
FAX: 810.235.4975
www.wadetrim.com

HRC
HUBBELL, ROTH & CLARK, INC
CONSULTING ENGINEERS SINCE 1915
555 HULET DRIVE
BLOOMFIELD HILLS, MICH.
P.O. BOX 824
48303 - 0824
PHONE: (248) 454-6300
FAX (1st. Floor): (248) 454-6312
FAX (2nd. Floor): (248) 338-2592
WEB SITE: http:// www.hrc-engr.com

CITY OF FLINT WPCF
WASTE UNLOADING STATION PROJECT

PLUMBING SCHEMATIC, SCHEDULES, AND DETAILS

ISSUED FOR:	DATE:	BY:
BIDS	2023.06.24	TSW

JOB NO. COF107601F

SHEET P-601

PLOTTED 6/23/2023 7:52:57 AM

BIM 360://COF107601-7-WPCF/WU_VT_M_R21.rvt

ABBREVIATIONS - PIPING

AFF	ABOVE FINISHED FLOOR
AL	ALUMINUM
ARV	AIR RELIEF VALVE
BCE	BIOLOGICAL CONTACTOR EFFLUENT
BF	BLIND FLANGE
BP	BYPASS
BWST	BURIED WASTE
BWTR	BURIED WATER
C	CENTRATE
CA	COMPRESSED AIR
CDS	CHEMICAL DOSING
CE	CHLORINATED EFFLUENT
CI	CAST IRON
CIP	CAST IRON PIPE
CISP	CAST IRON SOIL PIPE
CL	CENTER LINE
CLK	CAMLOCK CONNECTOR
CON	CONCENTRATE
CON RED	CONCENTRIC REDUCER
CONC	CONCRETE
CPVC	CHLORINATED POLYVINYL CHLORIDE
CUP	COPPER PIPE
CW	COLD WATER
D	DRAIN
DE	DECANT
DI	DUCTILE IRON
DIP	DUCTILE IRON PIPE
DMJ	DISMANTLING JOINT
DS	DIGESTED SLUDGE
ECC	ECCENTRIC
ECC RED	ECCENTRIC REDUCER
ED	EQUIPMENT DRAIN
EFF	EFFLUENT
EI	EQUALIZATION TANK INFLUENT
EL	ELEVATION
ELB	ELBOW
ER	EQUALIZATION TANK RETURN
ES	EQUALIZATION TANK SLUDGE
EWST	EXPOSED WASTE
FA	FOUL AIR
FCA	FLANGED COUPLING ADAPTER
FD	FLOOR DRAIN
FE	FINAL EFFLUENT
FFWD	FEED FORWARD
FLG	FLANGE
FM	FORCE MAIN
FOB	FLAT ON BOTTOM
FOT	FLAT ON TOP
FRP	FIBERGLASS REINFORCED PIPE
FS	FINAL TANK SLUDGE
FTW	FILTER TO WASTE
GRS	GREASE
GRT	GRIT
GRV	GROOVED JOINT
GSP	GALVANIZED STEEL PIPE
GW	GLAND WATER
HDPE	HIGH DENSITY POLYETHYLENE PIPE
HS	HEATED SLUDGE
INF	INFLUENT
INV	INVERT
LPA	LOW PRESSURE AIR
LR	LONG RADIUS

ABBREVIATIONS - PIPING

MBR	MEMBRANE BIOREACTOR
MFR	MANUFACTURER
MH	MANHOLE
MJ	MECHANICAL JOINT
ML	MIXED LIQUOR
MLP	MAIN LIFT PUMP
NaOCl	SODIUM HYPOCHLORITE
NC	NORMALLY CLOSED
NO	NORMALLY OPEN
NPW	NON-POTABLE WATER
OVRFL	OVERFLOW
PA	PROCESS AIR
PE	PRIMARY TANK EFFLUENT
PEP	POLYETHYLENE PIPE
PERM	PERMEATE
PEW	PLANT EFFLUENT WATER
PI	PRIMARY TANK INFLUENT
PLT	PLATE
POA	PULLOUT ASSEMBLY
PP	POLYPROPYLENE PIPE
PS	PRIMARY TANK SLUDGE
PVC	POLYVINYL CHLORIDE
PW	POTABLE WATER
RAS	RETURN ACTIVATED SLUDGE
RC	RECYCLED
RCP	REINFORCED CONCRETE PIPE
RDMJ	RESTRAINED DISMANTLING JOINT
RECYC	INTERNAL RECYCLE
RED	REDUCER
REW	REUSE WATER
RFCA	RESTRAINED FLANGED COUPLING ADAPTER
RO	REVERSE OSMOSIS
RS	RAW SEWAGE
RW	RAW WATER
S	SCUM
SAM	SAMPLE
SE	SECONDARY EFFLUENT
SFE	SECONDARY FINAL EFFLUENT
SN	SUPERNATANT
SPD	SUMP PUMP DISCHARGE
SS or SST	STAINLESS STEEL
STL	STEEL PIPE
SW	SECONDARY WASTE
SWHP	SECONDARY WATER - HIGH PRESSURE
SWLP	SECONDARY WATER - LOW PRESSURE
SWMP	SECONDARY WATER - MEDIUM PRESSURE
SWP	SEAL WATER PANEL
TE	TERTIARY EFFLUENT
THD	THREADED
THS	THICKENED SLUDGE
TO	THICKENER OVERFLOW
TOR	THERMAL OIL RETURN
TOS	THERMAL OIL SUPPLY
TS	TRANSFER SLUDGE
UNO	UNLESS NOTED OTHERWISE
UWF	UNFILTERED WATER FLUSH
V	VENT
VIF	VERIFY IN FIELD
WAS	WASTE ACTIVATED SLUDGE
WM	WATER MAIN
WWD	WASHWATER DRAIN
WWS	WASHWATER SUPPLY

VALVE SYMBOLS

- TRIPLE DUTY VALVE
- GATE VALVE
- GLOBE VALVE
- BALL VALVE
- BUTTERFLY VALVE
- CORPORATION COCK
- BALANCING VALVE
- PET COCK
- CHECK VALVE
- PLUG VALVE
- STOP AND CHECK VALVE
- PINCH VALVE
- DIAPHRAGM VALVE
- AUTO-FLOW CONTROL VALVE
- ANGLE OR NEEDLE VALVE
- PRESSURE RELIEF VALVE
- THREE WAY VALVE
- TEMPERING VALVE
- SOLENOID OPERATED VALVE
- PRESSURE REGULATING VALVE (SELF CONTAINED)
- MOTORIZED CONTROL VALVE (OPEN-SHUT, THROTTLING)
- PNEUMATIC OPERATED CONTROL VALVE (OPEN-SHUT, THROTTLING)
- BP — BACKPRESSURE VALVE
- HB — HOSE BIBB (3/4")
- FHB — FLUSHING HOSE BIBB (1-1/2")
- SC — SILL COCK (3/4")
- FC — FLUSHING CONNECTION (ON PIPE) 1-1/2"
- ASV — ANTISIPHON VALVE
- 0-100 PSI PI — PUMP/BLOWER INCLUDING PRESSURE GAUGES
  - PI = PRESSURE GUIDE
  - PI-D = PRESSURE GAUGE W/ DIAPHRAGM SEAL
  - PI-P = PRESSURE GAUGE W/ PULSATION DAMPER

PIPING & EQUIPMENT SYMBOLS

- VTR — VENT TO ROOF
- PIPE ANCHOR
- EXPANSION JOINT
- EXPANSION COMPENSATOR
- FLEXIBLE CONNECTOR
- FE — FLOW ELEMENT
- PIPE GUIDE
- YH — YARD HYDRANT (SEE DETAIL)
- PRS — PRESSURE REDUCING STATION (SEE DETAIL)
- SEAL — PUMP SEALING WATER CONNECTION (SEE DETAIL)
- SD — SAMPLE FUNNEL (SEE DETAIL)
- LBS — AIR SET ASSEMBLY (SEE DETAIL)
- A-TH — AIR TO VALVE OPERATOR (SEE DETAIL) (THROTTLING SERVICE)
- A-OS — AIR TO VALVE OPERATOR (SEE DETAIL) (OPEN SHUT SERVICE)
- MIX — IN LINE STATIC MIXER
- E — EDUCTOR
- I — INJECTOR
- TRAP (STEAM OR AIR MOISTURE)
- QD — QUICK DISCONNECT (AIR) (3/4")
- ELBOW UP
- ELBOW DOWN
- TEE UP
- TEE DOWN
- REDUCER-CONCENTRIC
- REDUCER-ECCENTRIC
- WYE STRAINER
- BASKET STRAINER
- UNION
- M — METER (TOTALIZING)
- ROTAMETER
- STEEL WALL SLEEVE
- ES — EMERGENCY SHOWER AND EYEWASH
- PIPING (BELOW SLAB)
- FD — FLOOR DRAIN
- FD/SB — FLOOR DRAIN W/SEDIMENT BUCKET
- FS — FLOOR SINK
- PBD — PUMP BASE DRAIN
- E D — EQUIPMENT DRAIN
- C O — CLEANOUT-FLOOR
- C O — CLEANOUT-HORIZONTAL
- RD — ROOF DRAIN
- D — PIPE TO DRAIN
- P — IN-LINE PUMP
- INSTRUMENT AIR PNEUMATIC SIGNAL
- ELECTRIC
- INSTRUMENT CAPILLARY TUBING
- BFP D — BACKFLOW PREVENTER
- CONNECTION TO EXISTING
- PIPE CAP OR PLUG
- DIRECTION OF FLOW

INSTRUMENTATION SYMBOLS

	PANEL MOUNTED INSTRUMENT (INSIDE)
	PANEL MOUNTED INSTRUMENT (FACE)
	LOCALLY MOUNTED INSTRUMENT
FE	FLOW ELEMENT
FI	FLOW INDICATOR
LE	LEVEL ELEMENT
LWC	LOW WATER CUT-OFF
PS	PRESSURE SWITCH
TI	TEMPERATURE INDICATOR
TIC	TEMPERATURE INDICATOR CONTROLLER
TT	TEMPERATURE TRANSMITTER

SLEEVE DESIGNATIONS

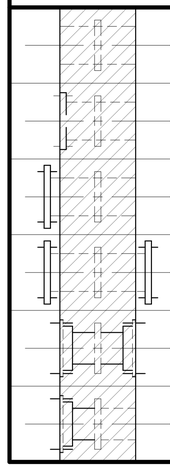

- PLAIN END x PLAIN END WALL SLEEVE
- RECESSED FLANGE x PLAIN END WALL SLEEVE
- FLANGE x PLAIN END WALL SLEEVE
- FLANGE x FLANGE WALL SLEEVE
- MECHANICAL JOINT x MECHANICAL JOINT WALL SLEEVE
- MECHANICAL JOINT x PLAIN END WALL SLEEVE

TEMPERATURE CONTROL SYMBOLS

TI	TEMPERATURE INDICATOR
M-1	DAMPER OPERATOR
TT-1	TEMPERATURE TRANSMITTER
FS-1	FIRESTAT
FZ-1	FREEZE STAT
	EP RELAY
TC-1	TEMPERATURE CONTROLLER
R-1	RELAY
C-1	CONTROLLER
SD-1	SMOKE DETECTOR
*	PANEL MOUNTED DEVICES
NT	NIGHT THERMOSTAT

GENERAL NOTES PROCESS PIPING

A	LAY PIPE TO UNIFORM GRADE BETWEEN INDICATED ELEVATION POINTS.
B	UNLESS NOTED OTHERWISE, PIPE ELEVATIONS SHOWN ON PIPING DRAWINGS REFER TO CENTERLINE OF PIPE.
C	SUBMIT THE ROUTING OF PIPING NOT SHOWN IN THE DRAWINGS FOR APPROVAL, INCLUDING PIPING SMALLER THAN 3 INCHES.
D	SIZE OF FITTINGS SHOWN ON DRAWINGS SHALL CORRESPOND TO ADJACENT STRAIGHT RUN OF PIPE, UNLESS NOTED OTHERWISE. TYPE OF JOINT AND FITTING MATERIAL SHALL BE THE SAME AS SHOWN FOR ADJACENT STRAIGHT RUN OF PIPE.
E	LOCATIONS AND NUMBER OF PIPE HANGERS AND PIPE SUPPORTS SHOWN ARE APPROXIMATE. CONTRACTOR SHALL DESIGN AND PROVIDE PIPE SUPPORTS AS SPECIFIED.
F	ALL JOINTS SHALL BE WATERTIGHT. WALL PIPES SHALL BE USED WHEREVER PIPING PASSES FROM A STRUCTURE TO BACKFILL OR THROUGH WATERTIGHT STRUCTURE.
G	ALL FLEXIBLE CONNECTORS AND COUPLING ADAPTERS SHALL BE PROVIDED WITH THRUST PROTECTION AS SPECIFIED, UNLESS NOTED OTHERWISE. THRUST PROTECTION SHALL BE ADEQUATE FOR TEST PRESSURES SPECIFIED.
H	NOT ALL OF THE GRAPHICS, ABBREVEATIONS, ETC., SHOWN ON THIS SHEET ARE USED ON THE PROJECT.
I	NUMBER AND LOCATION OF UNIONS SHOWN ON DRAWINGS ARE APPROXIMATE. PROVIDE ALL UNIONS NECESSARY TO FACILITATE CONVENIENT REMOVAL OF VALVES AND MECHANICAL EQUIPMENT.
J	WHERE A GROOVED END COUPLING IS SHOWN, IT SHALL BE THE RIGID JOINT TYPE, UNLESS OTHERWISE SPECIFIED. WHERE A FLANGED COUPLING ADAPTER IS SHOWN, A STANDARD FLANGE SHALL BE JOINED TO THE COUPLING ADAPTER.
K	LOCATE PRESSURE TAPS ON THE TOP OF PROCESS PIPES.
L	LOCATE SAMPLE TAPS ON THE SIDE OF PROCESS PIPES.
M	LOCATE DRAIN TAPS ON THE BOTTOM OF PROCESS PIPES.
N	INSTALL ALL PLUG, BUTTERFLY, AND BALL VALVES WITH THE SHAFT IN THE HORIZONTAL POSITION, UNLESS NOTED OTHERWISE.
O	ALL MECHANICAL AND PROCESS EQUIPMENT SHALL BE PLACED ON CONCRETE HOUSEKEEPING PADS, WHETHER INDICATED OR NOT. SEE STRUCTURAL SHEETS FOR TYPICAL DETAILS.
P	HYDRAULIC GRADE LINE ELEVATIONS ARE PROVIDED IN THE CITY OF DETROIT DATUM. ALL OTHER ELEVATIONS ARE PROVIDED IN NAVD88. THE CONVERSION FROM THE CITY OF DETROIT DATUM TO NAVD88 IS 479.20'.

REV#	DATE	DESCRIPTION	BY
1	2023.06.24	ISSUED FOR BIDS	TSW

CITY of FLINT MICHIGAN

WADE TRIM
555 South Saginaw Street, Suite 201
Flint, MI 48502
810.235.2555 / 800.841.0342
FAX: 810.235.4975
www.wadetrim.com

HRC
HUBBELL, ROTH & CLARK, INC
CONSULTING ENGINEERS SINCE 1915
555 HULET DRIVE, BLOOMFIELD HILLS, MICH. — P.O. BOX 824, 48303 - 0824
PHONE: (248) 454-6300
FAX (1st. Floor): (248) 454-6312
FAX (2nd. Floor): (248) 338-2592
WEB SITE: http:// www.hrc-engr.com

CITY OF FLINT WASTE UNLOADING STATION PROJECT

PROCESS SYMBOLS AND ABBREVIATIONS

ISSUED FOR:	DATE:	BY:
BIDS	2023.06.14	TSW

JOB NO. COF1076

SHEET D-001

PLOTTED 6/22/2023 5:46:39 PM

BIM 360://COF1076-7-WPCF/WU_WT_D_R21.rvt

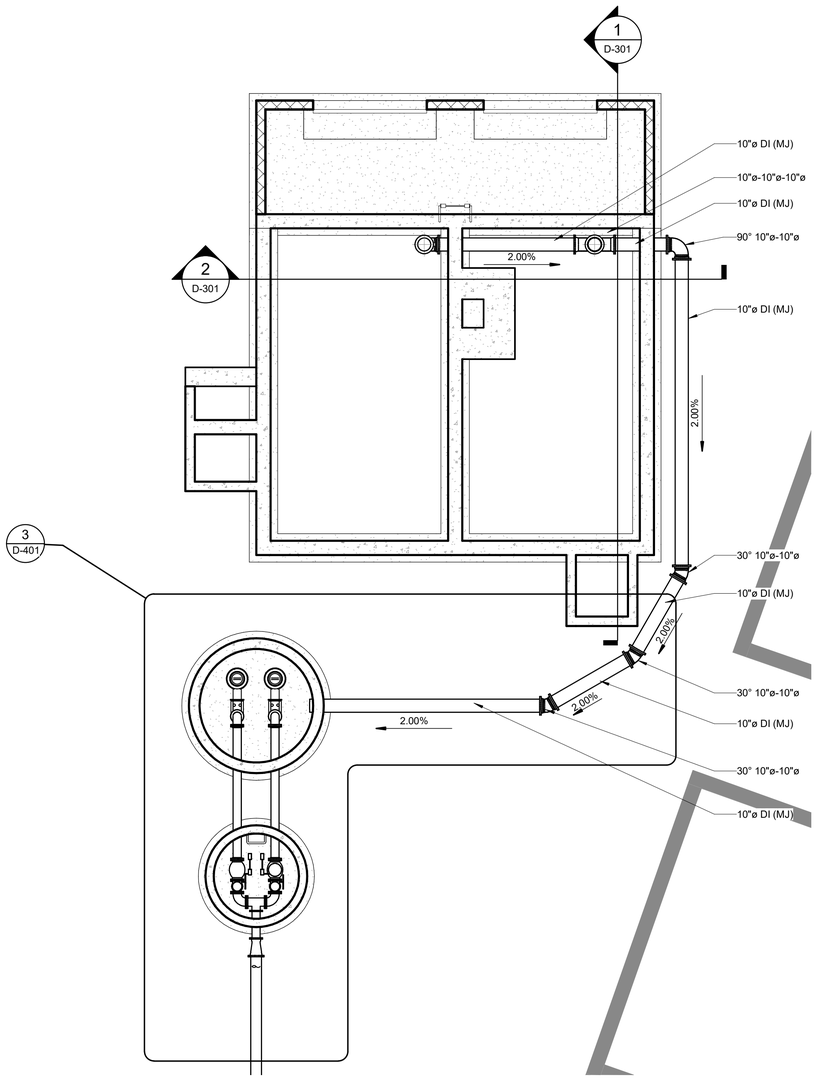

UG PIPING PLAN

SCALE: 3/16" = 1'-0"

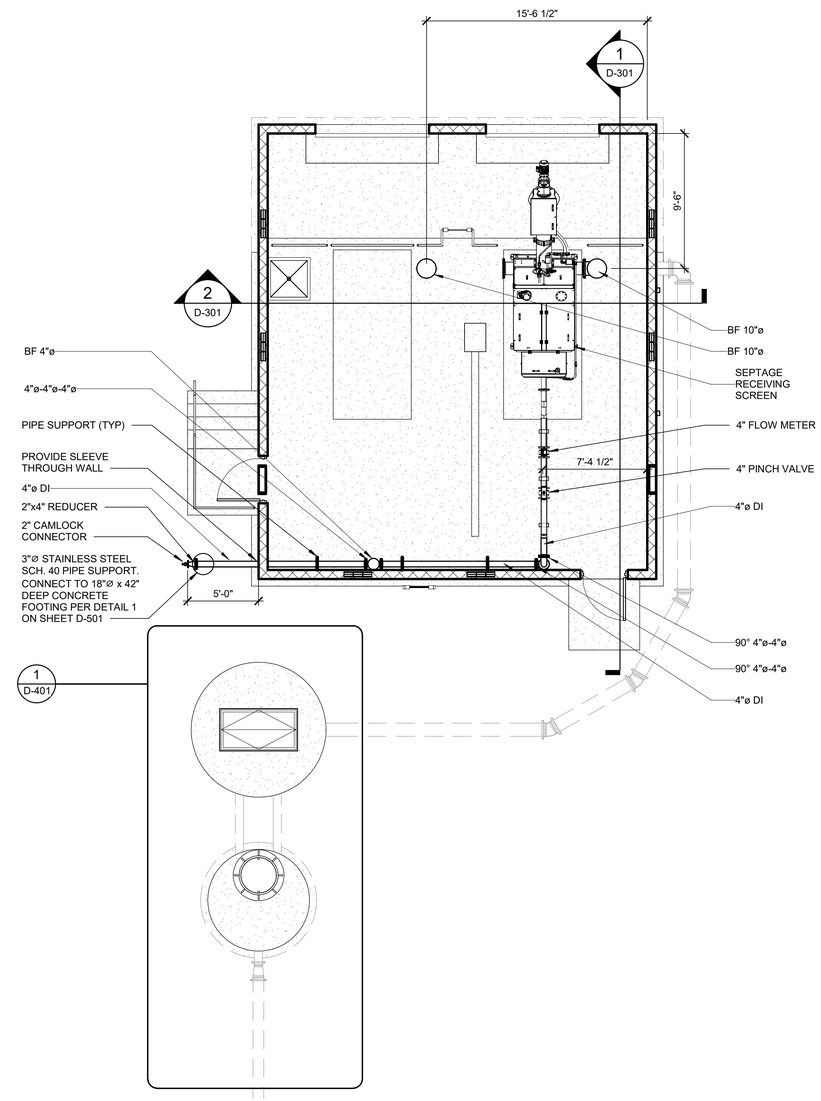

FFE (HP)

SCALE: 3/16" = 1'-0"

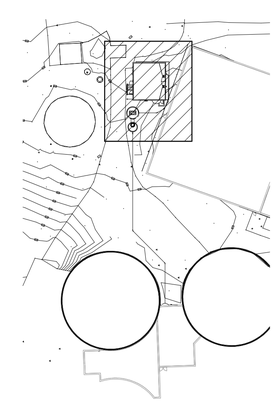

KEY PLAN

NOT TO SCALE

REV#	DATE	DESCRIPTION	BY
1	2023.06.24	ISSUED FOR BIDS	TSW

CITY of FLINT MICHIGAN

WADE TRIM
555 South Saginaw Street, Suite 201
Flint, MI 48502
810.235.2555 / 800.841.0342
FAX: 810.235.4975
www.wadetrim.com

HRC
HUBBELL, ROTH & CLARK, INC
CONSULTING ENGINEERS SINCE 1915
555 HULET DRIVE
BLOOMFIELD HILLS, MICH.
P.O. BOX 824
48303 - 0824
PHONE: (248) 454-6300
FAX (1st. Floor): (248) 454-6312
FAX (2nd. Floor): (248) 338-2592
WEB SITE: http:// www.hrc-engr.com

CITY OF FLINT
WASTE UNLOADING STATION PROJECT

WASTE UNLOADING BUILDING AND PUMP STATION PLANS

ISSUED FOR:	DATE:	BY:
BIDS	2023.06.24	TSW

JOB NO. COF1076

SHEET D-101

PLOTTED 6/22/2023 5:46:46 PM
BIM 360://COF1076-7-WPCF/WU_WT_D_R21.rvt

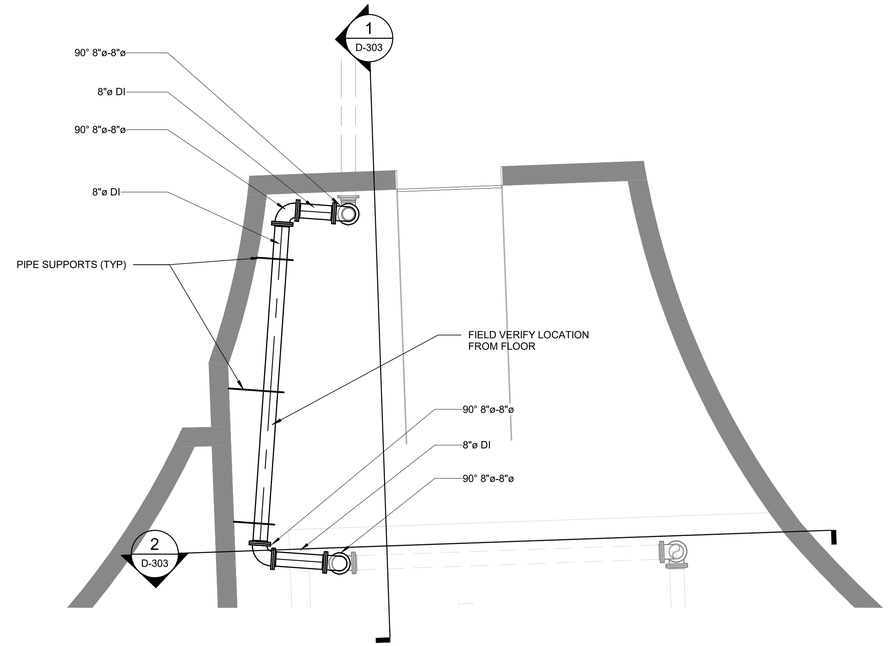

DIGESTER BUILDING - NORTH / GROUND LEVEL PLAN

SCALE: 1/4" = 1'-0"

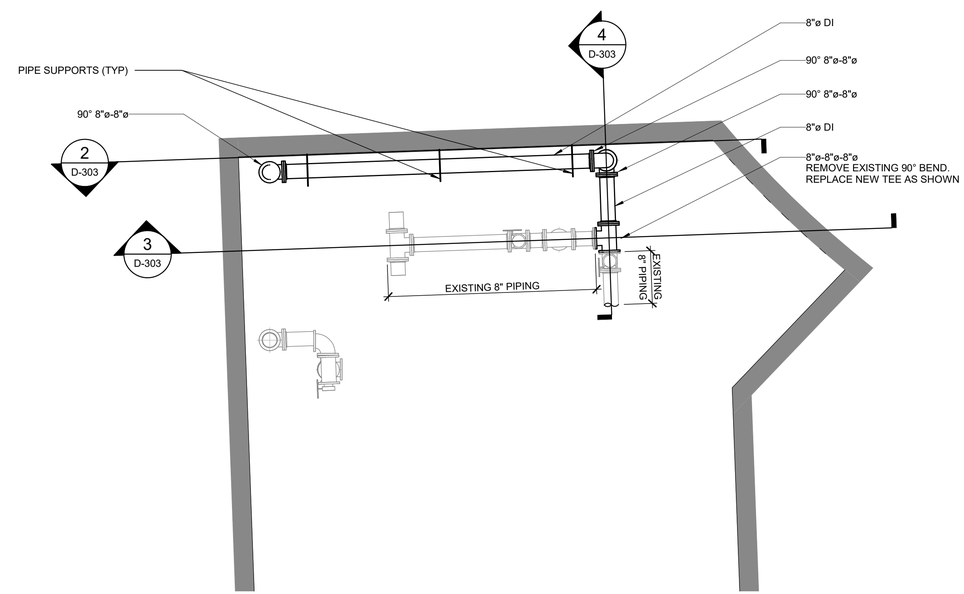

DIGESTER BUILDING - NORTH / LOWER LEVEL PLAN

SCALE: 1/4" = 1'-0"

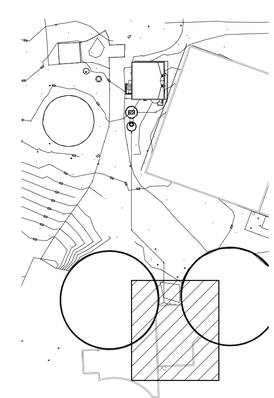

KEY PLAN

NOT TO SCALE

REV#	DATE	DESCRIPTION	BY
1	2023.06.24	ISSUED FOR BIDS	TSW

WADE TRIM
555 South Saginaw Street, Suite 201
Flint, MI 48502
810.235.2555 / 800.841.0342
FAX: 810.235.4975
www.wadetrim.com

HRC
HUBBELL, ROTH & CLARK, INC
CONSULTING ENGINEERS SINCE 1915
555 HULET DRIVE
BLOOMFIELD HILLS, MICH.
P.O. BOX 824
48303 - 0824
PHONE: (248) 454-6300
FAX (1st. Floor): (248) 454-6312
FAX (2nd. Floor): (248) 338-2592
WEB SITE: http:// www.hrc-engr.com

CITY OF FLINT
WASTE UNLOADING STATION PROJECT

DIGESTER BUILDING FLOOR PLAN

ISSUED FOR:	DATE:	BY:
BIDS	2023.06.24	TSW

JOB NO. COF1076

SHEET D-102

PLOTTED 6/22/2023 5:46:47 PM

BIM 360://COF1076-7-WPCF/WU_WT_D_R21.rvt

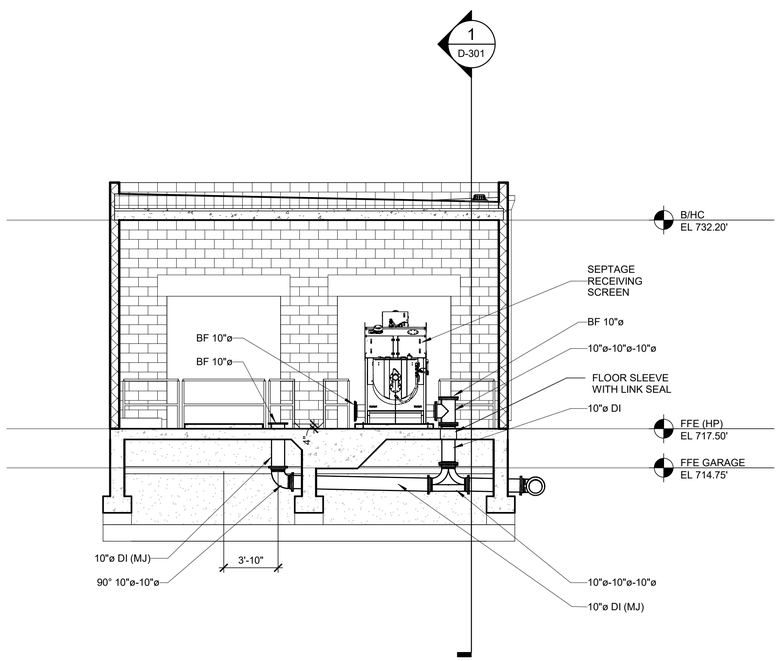

2 D-101 WASTE UNLOADING BUILDING - SECTION LOOKING NORTH

SCALE: 3/16" = 1'-0"

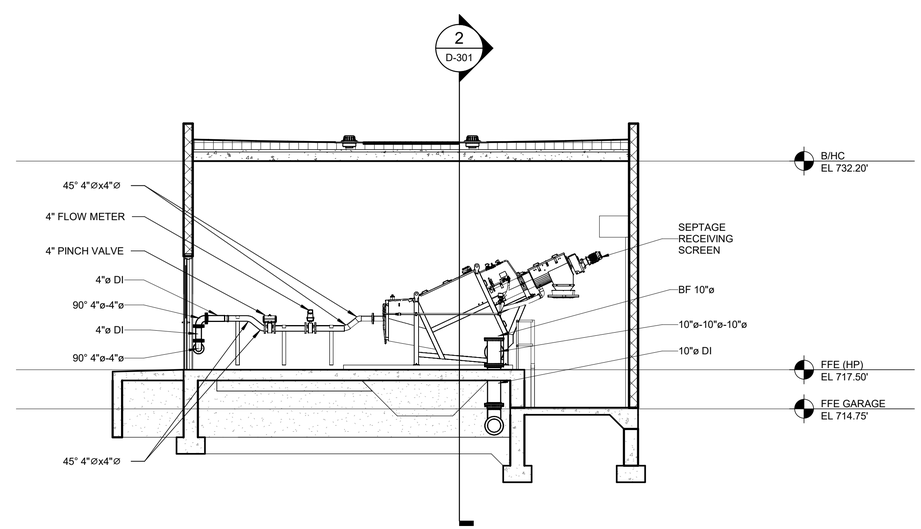

1 D-101 WASTE UNLOADING BUILDING - SECTION LOOKING EAST

SCALE: 3/16" = 1'-0"

REV#	DATE	DESCRIPTION	BY
1	2023.06.24	ISSUED FOR BIDS	TSW

CITY of FLINT MICHIGAN

WADE TRIM
555 South Saginaw Street, Suite 201
Flint, MI 48502
810.235.2555 / 800.841.0342
FAX: 810.235.4975
www.wadetrim.com

HRC
HUBBELL, ROTH & CLARK, INC
CONSULTING ENGINEERS SINCE 1915
555 HULET DRIVE
BLOOMFIELD HILLS, MICH.
P.O. BOX 824
48303 - 0824
PHONE: (248) 454-6300
FAX (Tel. Fiber): (248) 454-6312
FAX (Dial. Fiber): (248) 338-2592
WEB SITE: http:// www.hrc-engr.com

CITY OF FLINT
WASTE UNLOADING STATION PROJECT

WASTE UNLOADING BUILDING SECTIONS

ISSUED FOR:	DATE:	BY:
BIDS	2023.06.24	TSW

JOB NO. COF1076

SHEET D-301

PLOTTED 6/22/2023 5:47:01 PM
BIM 360://COF1076-7-WPCF/WU_WT_D_R21.rvt

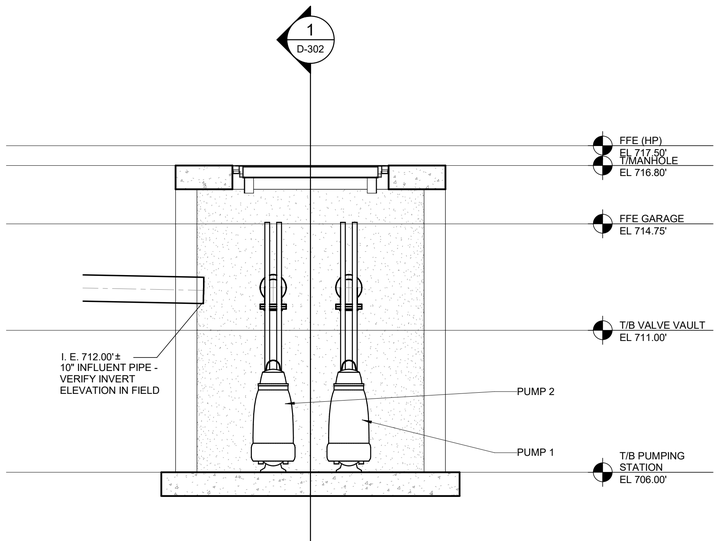

3 D-302 SECTION THROUGH WET WELL

SCALE: 3/8" = 1'-0"

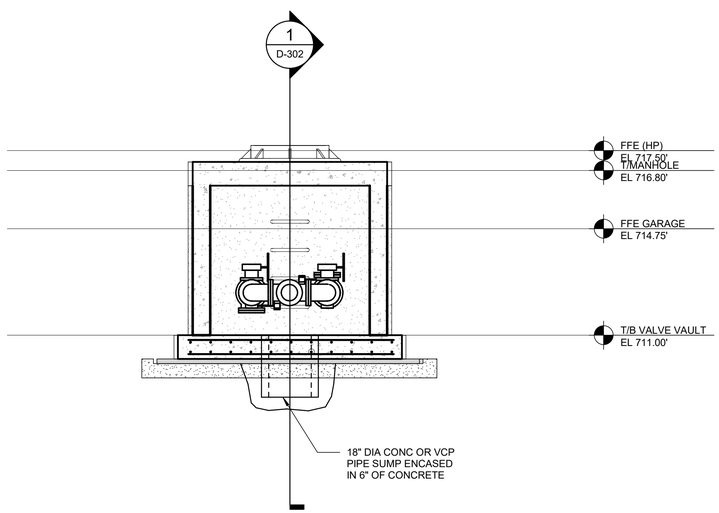

2 D-302 SECTION THROUGH VALVE VAULT

SCALE: 3/8" = 1'-0"

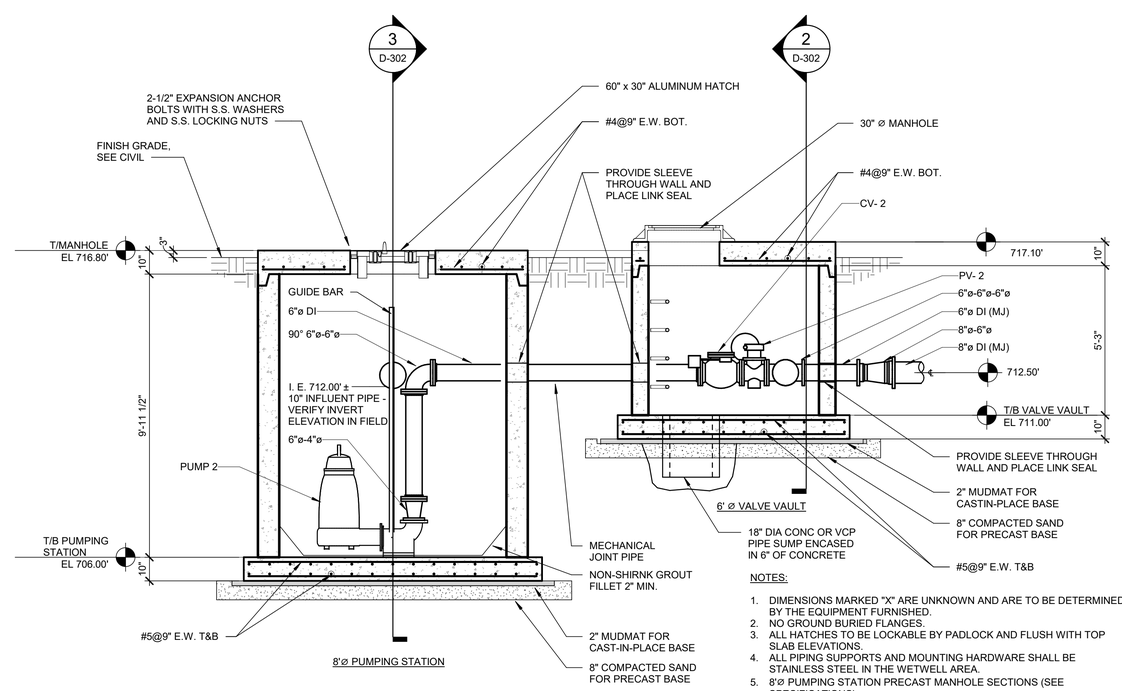

NOTES:

1. DIMENSIONS MARKED "X" ARE UNKNOWN AND ARE TO BE DETERMINED BY THE EQUIPMENT FURNISHED.
2. NO GROUND BURIED FLANGES.
3. ALL HATCHES TO BE LOCKABLE BY PADLOCK AND FLUSH WITH TOP SLAB ELEVATIONS.
4. ALL PIPING SUPPORTS AND MOUNTING HARDWARE SHALL BE STAINLESS STEEL IN THE WETWELL AREA.
5. 8'⌀ PUMPING STATION PRECAST MANHOLE SECTIONS (SEE SPECIFICATIONS).
6. 6'⌀ VALVE VAULT PRECAST MANHOLE SECTIONS (SEE SPECIFICATIONS).

1 D-302 SECTION THROUGH WET WELL AND VALVE VAULT

SCALE: 3/8" = 1'-0"

REV#	DATE	DESCRIPTION	BY
1	2023.06.24	ISSUED FOR BIDS	TSW

CITY of FLINT MICHIGAN

WADE TRIM
555 South Saginaw Street, Suite 201
Flint, MI 48502
810.235.2555 / 800.841.0342
FAX: 810.235.4975
www.wadetrim.com

HRC
HUBBELL, ROTH & CLARK, INC
CONSULTING ENGINEERS SINCE 1915
555 HULET DRIVE
BLOOMFIELD HILLS, MICH.
P.O. BOX 824
48303 - 0824
PHONE: (248) 454-6300
FAX (1st. Floor): (248) 454-6312
FAX (2nd. Floor): (248) 338-2592
WEB SITE: http:// www.hrc-engr.com

CITY OF FLINT
WASTE UNLOADING STATION PROJECT

PUMP STATION AND VALVE VAULT SECTIONS AND DETAILS

ISSUED FOR:	DATE:	BY:
BIDS	2023.06.24	TSW

JOB NO. COF1076

SHEET D-302

PLOTTED 6/22/2023 5:47:04 PM
BIM 360:\COF1076-7-WPCF\WU_WT_D_R21.rvt

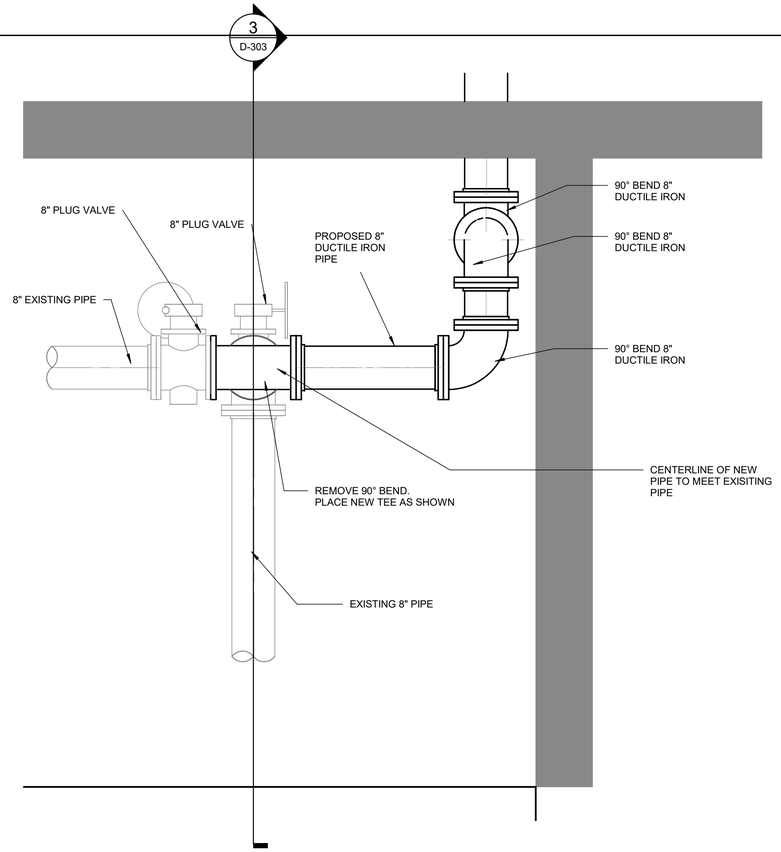

4 D-102 DIGESTER BASEMENT PIPE CONNECTION
SCALE: 3/4" = 1'-0"

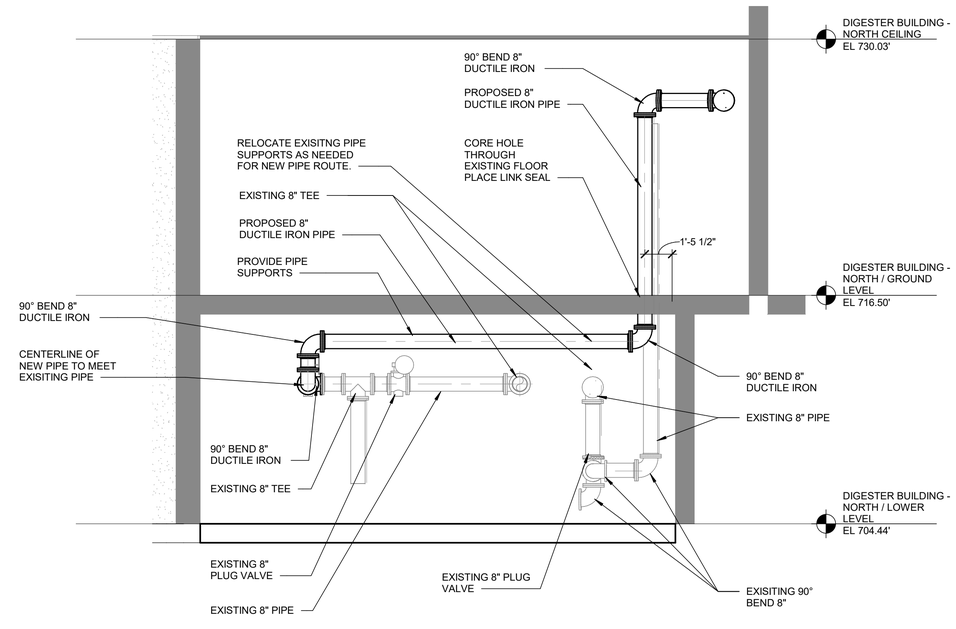

2 D-102 DIGESTER BUILDING SOUTH VIEW
SCALE: 1/4" = 1'-0"

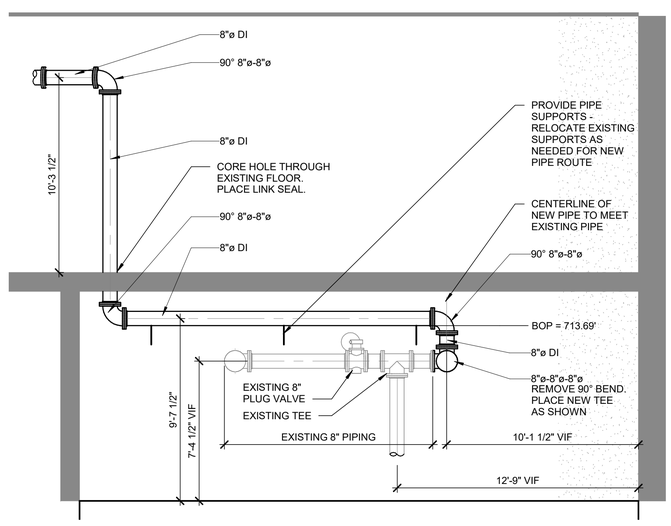

3 D-102 DIGESTER BUILDING NORTH VIEW1
SCALE: 1/4" = 1'-0"

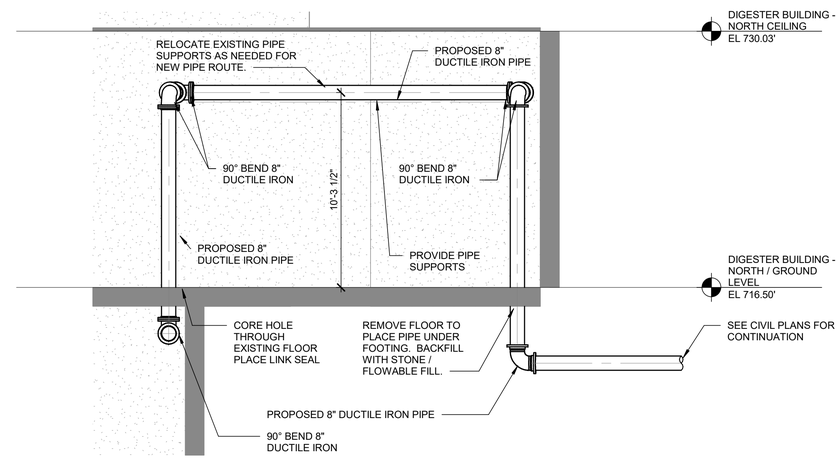

1 D-102 DIGESTER BUILDING WEST VIEW
SCALE: 1/4" = 1'-0"

REV#	DATE	DESCRIPTION	BY
1	2023.06.24	ISSUED FOR BIDS	TSW

CITY of FLINT MICHIGAN

WADE TRIM
555 South Saginaw Street, Suite 201
Flint, MI 48502
810.235.2555 / 800.841.0342
FAX: 810.235.4975
www.wadetrim.com

HRC
HUBBELL, ROTH & CLARK, INC
CONSULTING ENGINEERS SINCE 1915
555 HULET DRIVE, BLOOMFIELD HILLS, MICH. — P.O. BOX 824, 48303 - 0824
PHONE: (248) 454-6300
FAX (1st. Floor): (248) 454-6312
FAX (2nd. Floor): (248) 338-2592
WEB SITE: http:// www.hrc-engr.com

CITY OF FLINT
WASTE UNLOADING STATION PROJECT

DIGESTER BUILDING SECTIONS AND DETAILS

ISSUED FOR:	DATE:	BY:
BIDS	2023.06.24	TSW

JOB NO. COF1076

SHEET D-303

PLOTTED 6/22/2023 5:47:06 PM

BIM 360://COF1076-7-WPCF/WU_WT_D_R21.rvt

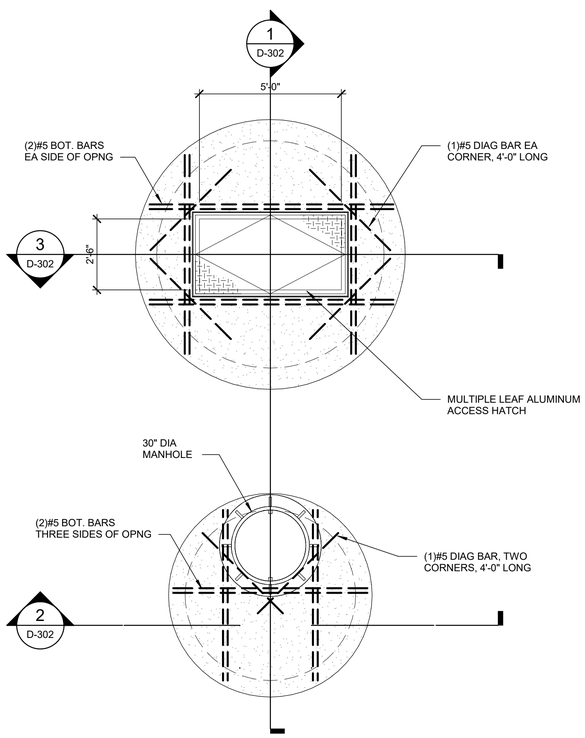

1 D-101 ENLARGED PUMP STATION PLAN - EL 718.80'

SCALE: 3/8" = 1'-0"

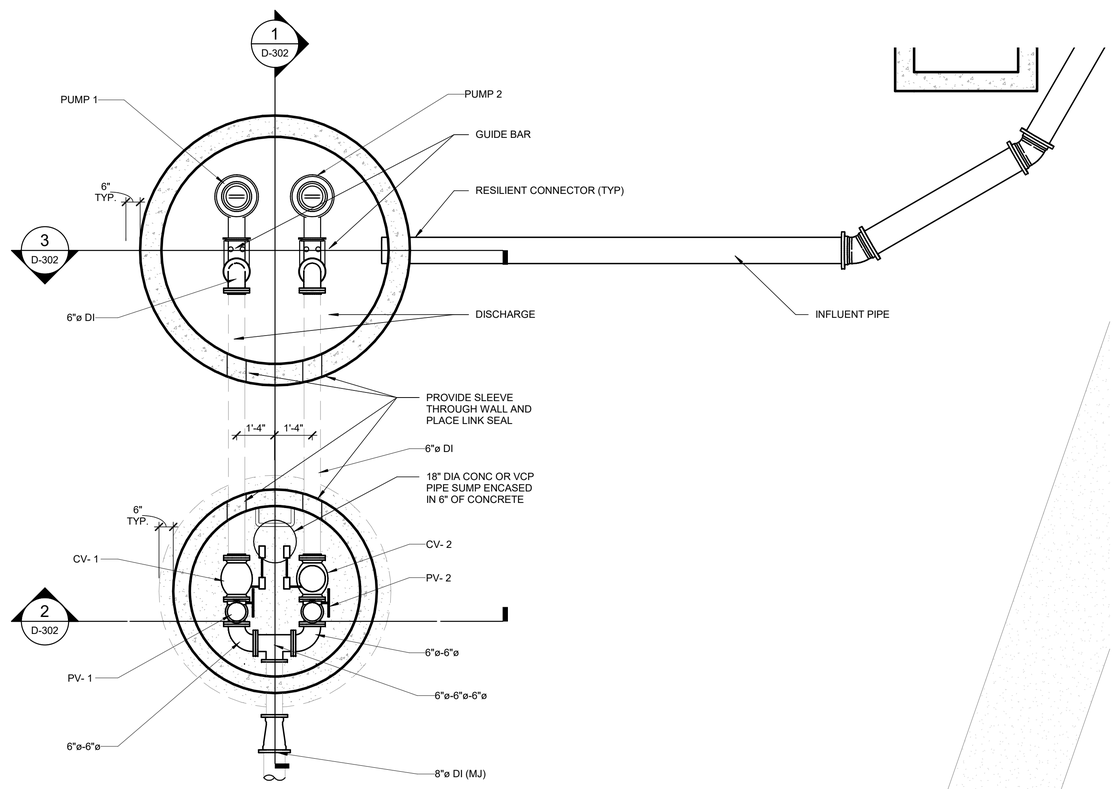

3 D-101 ENLARGED PUMP STATION PLAN - EL 708.00'

SCALE: 3/8" = 1'-0"

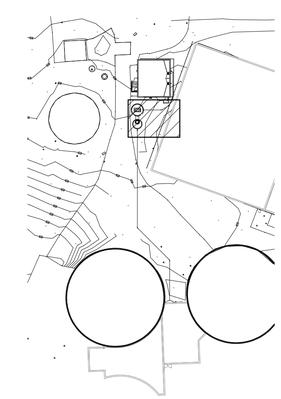

KEY PLAN

NOT TO SCALE

REV#	DATE	DESCRIPTION	BY
1	2023.06.24	ISSUED FOR BIDS	TSW

WADE TRIM
555 South Saginaw Street, Suite 201
Flint, MI 48502
810.235.2555 / 800.841.0342
FAX: 810.235.4975
www.wadetrim.com

HRC
HUBBELL, ROTH & CLARK, INC
CONSULTING ENGINEERS SINCE 1915
555 HULET DRIVE
BLOOMFIELD HILLS, MICH.
P.O. BOX 824
48303 - 0824
PHONE: (248) 454-6300
FAX (1st. Floor): (248) 454-6312
FAX (2nd. Floor): (248) 338-2592
WEB SITE: http:// www.hrc-engr.com

CITY OF FLINT
WASTE UNLOADING STATION PROJECT

PUMP STATION ENLARGED PLANS

ISSUED FOR:	DATE:	BY:
BIDS	2023.06.24	TSW

JOB NO. COF1076

SHEET D-401

PLOTTED 6/22/2023 5:47:08 PM

BIM 360://COF1076-7-WPCFWU_WT_D_R21.rvt

PIPE SCHEDULE

SERVICE	SIZE	MATERIAL	JOINT	TEST PRESSURE
EXPOSED WASTE	4" - 10"	DIP	FL	50 PSI
BURIED WASTE	4" - 10"	DIP	MJ	50 PSI
BURIED WATER	4"	DIP	MJ	100 PSI

VALVE SCHEDULE

TYPE	SIZE	QUANTITY	JOINT	OPERATOR	LOCATION
PLUG	6"	3	FL	HANDWHEEL / GEAR	SUBMERSIBLE PUMP STATION
SWING CHECK	6"	2	FL	OUTSIDE LEVER	SUBMERSIBLE PUMP STATION
PINCH	4"	1	FL	MOTOR	SCREEN ROOM - BY SCREEN MANUFACTURER

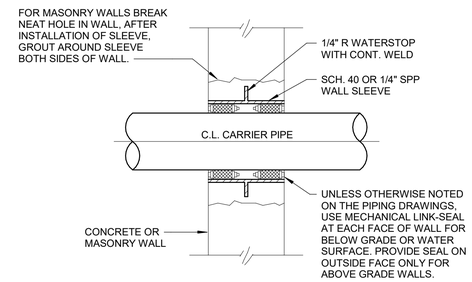

TYPICAL PIPE/DUCT SLEEVE IN EXTERIOR WALL

NO SCALE

2 TYP — TYPICAL PIPE/DUCT SLEEVE IN EXTERIOR WALL

NOT TO SCALE

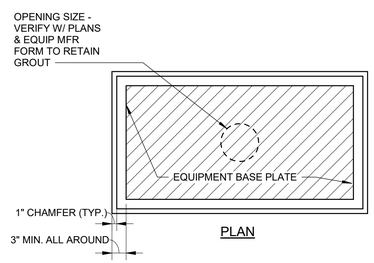

PLAN

NOTES:

1. THE CONCRETE FOUNDATION WITH ANCHOR BOLTS SHOWN IS DESIGNED FOR SMALL EQUIP W/O TENSION FORCES ON THE ANCHOR BOLTS.
2. SIZE, NUMBER, TYPE, LOCATION, AND THREAD PROJECTION OF THE ANCHOR BOLTS SHALL BE DETERMINED BY THE EQUIP MFR AND AS APPROVED BY THE ENGINEER. ANCHOR BOLTS SHALL BE HELD IN POSITION WITH A TEMPLATE OR OTHER ACCEPTABLE MEANS, MATCHING BASE PLATE, WHILE PAD IS BEING PLACED.
3. ANCHOR BOLT SLEEVES SHALL BE USED TO PROVIDE MIN ANCHOR BOLT MOVEMENT OF 1/2" IN ALL HORIZONTAL DIRECTIONS. THE MIN SLEEVE LENGTH SHALL BE 8 TIMES THE BOLT DIA.
4. ANCHOR SLEEVES SHALL HAVE A MIN INTERNAL DIAMETER 1" GREATER THAN BOLT DIA AND A MAX INTERNAL DIA OF 3" GREATER THAN BOLT DIA.
5. EQUIP BASES SHALL BE INSTALLED LEVEL UNLESS INDICATED OTHERWISE
6. WEDGES, SHIMS, OR LEVELING NUTS SHALL BE USED TO SUPPORT THE BASE WHILE THE GROUT IS PLACED. WEDGES OR SHIMS SHALL BE REMOVED AFTER GROUT IS SET. PACK VOID WITH GROUT.

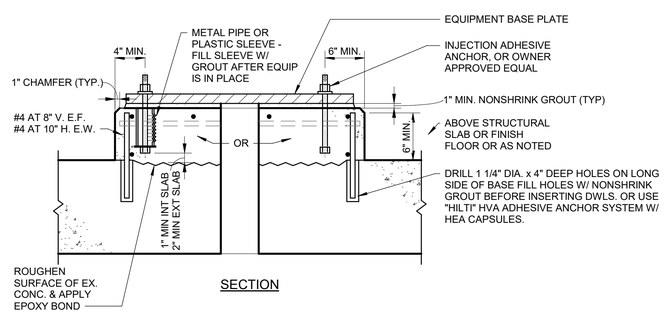

SECTION

3 TYP — TYPICAL CONCRETE EQUIPMENT PAD

NOT TO SCALE

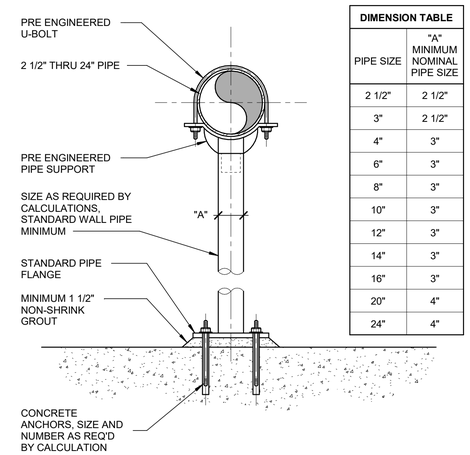

DIMENSION TABLE	
PIPE SIZE	"A" MINIMUM NOMINAL PIPE SIZE
2 1/2"	2 1/2"
3"	2 1/2"
4"	3"
6"	3"
8"	3"
10"	3"
12"	3"
14"	3"
16"	3"
20"	4"
24"	4"

NOTE:
SUBMIT FINAL DESIGN AND CALCULATIONS FOR SUPPORT AND ANCHORAGE AS SPECIFIED

1 TYP — PIPE SUPPORT - SADDLE PEDESTAL_NON-ADJUSTABLE

NOT TO SCALE

REV#	DATE	DESCRIPTION	BY
1	2023.06.24	ISSUED FOR BIDS	TSW

WADE TRIM
555 South Saginaw Street, Suite 201
Flint, MI 48502
810.235.2555 / 800.841.0342
FAX: 810.235.4975
www.wadetrim.com

HRC
HUBBELL, ROTH & CLARK, INC
CONSULTING ENGINEERS SINCE 1915
555 HULET DRIVE, BLOOMFIELD HILLS, MICH. 48303 - 0824
P.O. BOX 824, 48303 - 0824
PHONE: (248) 454-6300
FAX (1st. Floor): (248) 454-6312
FAX (2nd. Floor): (248) 338-2592
WEB SITE: http:// www.hrc-engr.com

CITY OF FLINT
WASTE UNLOADING STATION PROJECT

DETAILS AND SCHEDULES

ISSUED FOR:	DATE:	BY:
BIDS	2023.06.24	TSW

JOB NO. COF1076

SHEET D-501

PLOTTED 6/22/2023 5:47:08 PM

BIM 360:\COF1076-7-WPCF\WU_WT_D_R21.rvt

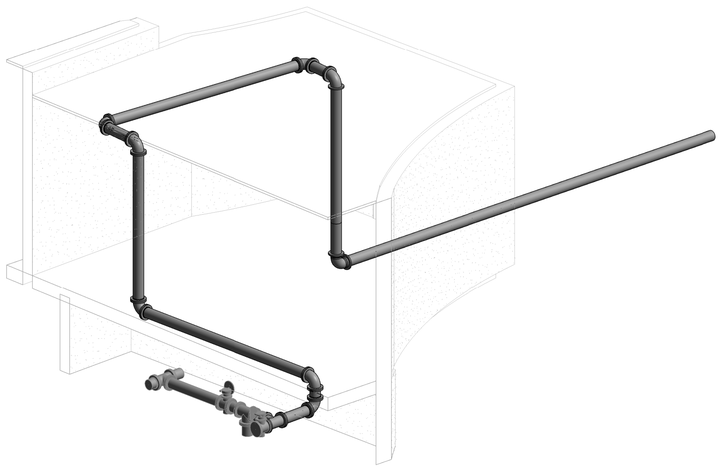

3D ISO VIEW - DIGESTER BUILDING

NOT TO SCALE

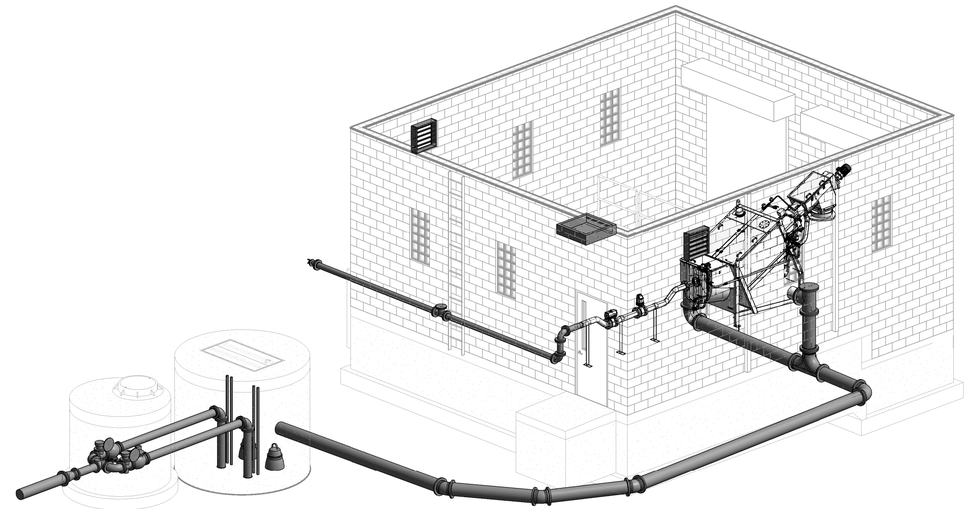

3D ISO VIEW - SOLIDS UNLOADING AND PUMP STATION

NOT TO SCALE

REV#	DATE	DESCRIPTION	BY
1	2023.06.24	ISSUED FOR BIDS	TSW

CITY of FLINT MICHIGAN

WADE TRIM
555 South Saginaw Street, Suite 201
Flint, MI 48502
810.235.2555 / 800.841.0342
FAX: 810.235.4975
www.wadetrim.com

HRC
HUBBELL, ROTH & CLARK, INC
CONSULTING ENGINEERS SINCE 1915
555 HULET DRIVE
BLOOMFIELD HILLS, MICH.
P.O. BOX 824
48303 - 0824
PHONE: (248) 454-6300
FAX (Tel. Fleet): (248) 454-6312
FAX (Dat. Fleet): (248) 358-2592
WEB SITE: http:// www.hrc-engr.com

CITY OF FLINT
WASTE UNLOADING STATION PROJECT

3D REPRESENTATIONS

ISSUED FOR:	DATE:	BY:
BIDS	2023.06.24	TSW

JOB NO. COF1076

SHEET D-904

PLOTTED 6/22/2023 5:56:18 PM

BIM 360://COF1076-7-WPCF/WU_WT_D_R21.rvt

ABBREVIATIONS - HVAC

%RH	RELATIVE HUMIDITY
A/C GAS	AIR CONDITIONING REFRIGERANT
ACC	AIR COOLED CONDENSER
ACCU	AIR COOLED CONDENSING UNIT
ACD	ACCESS DOOR
ACP	ACCESS PANEL
AD	AUTOMATIC DAMPER
AD/PR	ACCESS DOOR / PRESSURE RELIEF
AFF	ABOVE FINISHED FLOOR
AHU	AIR HANDLING UNIT
AP	ALARM PANEL
APD	AIR PRESSURE DROP
AUX	AUXILLIARY
B	BOILER
BACNET	BUILDING AUTOMATION & CONTROLS NETWORK
BCU	BLOWER COIL UNIT
BF	BOOSTER FAN
BOD	BOTTOM OF DUCT
BOI	BOTTOM OF INSULATION
BOP	BOTTOM OF PIPE
BOT	BOTTOM
C	COMMON
CA	COMBUSTION AIR
CAV	CONSTANT AIR VOLUME
CC	CABINET CONVECTOR
CC	COOLING COIL
CD	CEILING DIFFUSER
CE	CEILING EXHAUSTER
CEF	CENTRIFUGAL FAN
CF	CABINET FAN
CLG	CEILING
CONC	CONCRETE
COND	CONDENSATE
CONT	CONTINUATION
CONTR	CONTRACTOR
CRD	CORROSION RESISTANT DUCT
CUH	CABINET UNIT HEATER
CV	CONTROL VALVE
CWF	CENTRIFUGAL WALL FAN
DB	DECIBEL
DF	DUCT FURNACE (GAS FIRED)
DG	DOOR GRILLE
DH	DOOR HEATER
DIA	DIAMETER
DN	DOWN
DSF	DESTRATIFICATION FAN
DWG	DRAWING
DX	DIRECT EXPANSION
EA	EXHAUST AIR
EAT	ENTERING AIR TEMPERATURE
EBR	ELECTRIC BASEBOARD RADIATION
EC	ELECTRICAL CONTRACTOR
EDB	ENTERING DRY BULB
EDH	ELECTRIC DUCT HEATER
EF	EXHAUST FAN
EG	EXHAUST GRILLE
EH	ELECTRIC HUMIDIFIER
EH	EXHAUST HOOD
EHC	ELECTRIC HEATING COIL
EJ	EXPANSION JOINT
EL	ELEVATION
EL	EXHAUST LOUVER
ELECT	ELECTRICAL
EP	EXHAUST PLENUM
ER	EXHAUST REGISTER
ESP	EXTERNAL STATIC PRESSURE
EUH	ELECTRIC UNIT HEATER
EWB	ENTERING WET BULB
EWH	ELECTRIC WATER HEATER
EWT	ENTERING WATER TEMPERATURE
F	FILTER
FAT	FINAL AIR TEMPERATURE
FCU	FAN COIL UNIT
FD	FLOOR DRAIN
FF	FORCE FLOW CONVECTOR
FFE	FINISHED FLOOR ELEVATION
FL	FLOOR
FM	FLOW METER
FO	FLOOR OPENING
FS	FREEZE STAT
FT	FINNED TUBE RADIATION
FVV	FAN POWERED VAV BOX
FW	FIRE WATER
GC	GENERAL CONTRACTOR
GUH	GAS UNIT HEATER
GV	GRAVITY VENTILATOR
GWH	GAS WATER HEATER
HC	HEATING COIL
HCU	HEATING & COOLING UNIT
HD	HEAT DETECTOR
HORIZ	HORIZONTAL
HRC	HEAT RECOVERY COIL
HRP	HEAT RECOVERY PUMP

ABBREVIATIONS - HVAC

HRU	HEAT RECOVERY UNIT
HTX	HEAT EXCHANGER
HUH	HYDRONIC UNIT HEATER
HUM	HUMIDIFIER
HV	HEATING AND VENTILATING UNIT
HVAC	HEATING, VENTILATING & AIR CONDITIONING UNIT
HZ	HERTZ
ID	INSIDE DIAMETER
IE	INVERT ELEVATION
IF	INLINE FAN
IH	INTAKE HOOD
KW	KILOWATT
LAT	LATENT
LDB	LEAVING DRY BULB
LWB	LEAVING WET BULB
LWT	LEAVING WATER TEMPERATURE
MAU	MAKEUP AIR UNIT
MAX	MAXIMUM
MB	MIXING BOX
MC	MECHANICAL CONTRACTOR
MCC	MOTOR CONTROL CENTER
MID	MIDDLE
MIN	MINIMUM
MOD	MOTOR CONTROL DAMPER
N/A	NOT APPLICABLE
NC	NORMALLY CLOSED
NG	NATURAL GAS
NGV	NATURAL GAS VENT
NIC	NOT IN CONTRACT
NK	NECK
NO	NORMALLY OPEN
NPW	NON-POTABLE WATER
NTS	NOT TO SCALE
OA	OUTSIDE AIR
OAIL	OUTSIDE AIR INTAKE LOUVER
OAK	OUTSIDE AIR INTAKE
OD	OUTSIDE DIAMETER
P	PUMP
PH	PENTHOUSE
PHC	PREHEAT COIL
PRV	PRESSURE REDUCING VALVE
RA	RETURN AIR
RAG	RETURN AIR GRILLE
RAR	RETURN AIR REGISTER
RF	ROOF FAN
RF	RETURN FAN
RH	RELIEF HOOD
RV	ROOF VENTILATOR
SA	SUPPLY AIR
SAD	SUPPLY AIR DIFFUSER
SD	SMOKE DETECTOR
SDI	SMOKE DETECTOR IONIZATION
SF	SUPPLY FAN
SM	SHEET METAL
SP	STATIC PRESSURE
SPEC	SPECIFICATIONS
SQ	SQUARE
SR	SUPPLY REGISTER
SS	STAINLESS STEEL
SST	SATURATED SUCTION TEMPERATURE
SUH	STEAM UNIT HEATER
SUMPP	SUMP PUMP
TA	TRANSFER AIR
TAG	TRANSFER AIR GRILLE
TCC	TEMPERATURE CONTROL CONTRACTOR
TCP	TEMPERATURE CONTROL PANEL
TD	TEMPERATURE DIFFERENCE
TEMP	TEMPERATURE
TOD	TOP OF DUCT
TOP	TOP OF PIPE
TOS	TOP OF STEEL
TSP	TOTAL STATIC PRESSURE
TYP	TYPICAL
UH	UNIT HEATER
V	VENT
VAV	VARIABLE AIR VOLUME
VEL	VELOCITY
VERT	VERTICAL
VFD	VARIABLE FREQUENCY DRIVE
VP	VELOCITY PRESSURE
VTR	VENT THROUGH ROOF
VU	VENTILATION UNIT
W	WIDTH
WCC	WATER COOLED CONDENSING UNIT
WCO	WALL CLEANOUT
WD	WALL DIFFUSER
WF	WALL FAN
WG	WALL GRILLE
WMS	WIRE MESH SCREEN
WO	WALL OPENING
WPD	WATER PRESSURE DROP

DUCTWORK LEGEND

DOUBLE LINE	RECTANGULAR DUCT
12X6	DUCT SIZE (INSIDE DIMENSIONS) FIRST FIGURE IS SIDE SHOWN
24x12	SUPPLY DUCT
24x12	RETURN DUCT
12x12	EXHAUST DUCT
	FLEXIBLE CONNECTION IN DUCTWORK
	SUPPLY DUCT TURNING TOWARD VIEWER RECTANGULAR ELBOW
	SUPPLY DUCT TURNING TOWARD VIEWER RADIUS ELBOW
	SUPPLY DUCT TURNING AWAY VIEWER RECTANGULAR ELBOW
	SUPPLY DUCT TURNING AWAY VIEWER RADIUS ELBOW
	RETURN DUCT TURNING TOWARD VIEWER RECTANGULAR ELBOW
	RETURN DUCT TURNING TOWARD VIEWER RADIUS ELBOW
	RETURN DUCT TURNING AWAY VIEWER RECTANGULAR ELBOW
	RETURN DUCT TURNING AWAY VIEWER RADIUS ELBOW
	EXHAUST DUCT TURNING TOWARD VIEWER RECTANGULAR ELBOW
	EXHAUST DUCT TURNING TOWARD VIEWER RADIUS ELBOW
	EXHAUST DUCT TURNING AWAY VIEWER RECTANGULAR ELBOW
	EXHAUST DUCT TURNING AWAY VIEWER RADIUS ELBOW
	DUCT ELBOWS
	ELBOW WITH TURNING VANES
	RADIUS ELBOW W/VANES
20°MAX. 30°MAX.	TRANSITION IN DIRECTION OF AIR FLOW
	VOLUME DAMPER
M	M - MOTORIZED DAMPER

DOUBLE LINE	ROUND DUCT
12"ø	DUCT SIZE (DIAMETER)
	FLEXIBLE DUCT
	DUCT TURNING TOWARD VIEWER
	DUCT TURNING AWAY FROM VIEWER
	ROUND ELBOW
	MITER ELBOW
	MITER ELBOW W/TURNING VANES
	VOLUME DAMPER
M	M - MOTORIZED DAMPER
	BG - BLAST GATE
20"MAX.	TRANSITION
	SQUARE TO ROUND TRANSITION
	BELLMOUTH CONNECTION
	TEE CONNECTION
	Y CONNECTION
	Y-SPLIT (EQUAL SIZE ONLY)

T	AIR FLOW, TRANSFER
	AIR FLOW, SUPPLY, OUTSIDE AIR
	AIR FLOW, EXHAUST, RETURN
L	LOUVER IN DOOR
U	UNDERCUT DOOR
	LINDIF
	INLET VANES
H	HUMIDISTAT - WALL MOUNTED
T	THERMOSTAT - WALL MOUNTED
	THERMOSTAT - UNIT MOUNTED
F	FIRE DAMPER 1 1/2 HOUR RATING
F	FIRE DAMPER 2 HOUR RATING
TT	TEMPERATURE TRANSMITTER
H	HUMIDIFICATION SENSOR
CO2	CARBON DIOXIDE SENSOR

SD	SMOKE DETECTOR
P	PRESSURE SENSOR
BDD	BACKDRAFT DAMPER
	FAN
+	HEATING COIL
−	COOLING COIL

GENERAL HVAC NOTES

A	REFER TO SPECIFICATION SECTIONS FOR SPECIFIC MATERIAL AND INSTALLATION DATA
B	COORDINATE THIS WORK WITH WORK BY OTHER CONTRACTORS
C	COORDINATE ALL WALL AND ROOF PENETRATIONS WITH ARCHITECTURAL AND STRUCTURAL DRAWINGS
D	COORDINATE AIR DEVICE PLACEMENT WITH LIGHTS AND CEILINGS
E	MODIFICATIONS IN DUCT ROUTINGS MUST BE APPROVED BY OWNER'S REPRESENTATIVE
F	INSTALL VOLUME DAMPERS AT ALL AIR DEVICE BRANCH CONNECTIONS
G	COORDINATE WITH TEST AND BALANCE CONTRACTOR TO ENSURE PROPER PLACEMENT OF VOLUME DAMPERS
H	PROVIDE ACCESS DOORS AT ALL FIRE DAMPERS AND OUTSIDE AIR FLOW MEASURING STATIONS
J	DUCT ELBOWS: 1. RECTANGULAR DUCT ELBOWS MAY BE RADIUS OR MITERED AND SHALL COMPLY WITH SMACNA'S "HVAC DUCT CONSTRUCTION STANDARDS - METAL AND FLEXIBLE", FIGURE 4-2, "RECTANGULAR ELBOWS". 2. ROUND DUCT ELBOWS MAY VARY IN RADIUS-TO-DIAMETER RATIO, BUT MUST COMPLY WITH SMACNA'S "HVAC DUCT CONSTRUCTION STANDARDS - METAL AND FLEXIBLE", FIGURE304, "ROUND DUCT ELBOWS".
K	APPROXIMATE. SEE EQUIPMENT CERTIFIED DRAWINGS FOR EXACT DIMENSIONS
L	PROVIDE FIRE STOPPING AROUND ALL PENETRATIONS THROUGH FIRE RATED WALLS AND ROOFS
M	DUCTWORK SHALL BE STAINLESS STEEL, CONSTRUCTED PER LATEST EDITION OF THE SMACNA AND ASHRAE STANDARDS. ALL DUCTWORK JOINTS AND LONGITUDUNAL SEAMS SHALL BE SEALED SMACNA CLASS "A". INSULATED, CLASS 1 FLEXIBLE DUCTWORK SHALL BE USED FOR CONNECTIONS FROM LOW AND MEDIUM PRESSURE TRUNK DUCTWORK TO ALL FAN TERMINAL UNITS AND DIFFUSERS. 1. PROVIDE END CAPS, AS REQUIRED, NOT SPECIFICALLY CALLED OUT ON DRAWINGS 2. ALL DUCT SIZES ARE IN INCHES
N	COORDINATE AND FIELD VERIFY LOCATION AND SIZES OF DUCTWORK. LOUVER AND DUCT ACCESSORIES WITH ACTUAL OPENINGS PROVIDED BY OTHERS
P	VERIFY ALL DIMENSIONS PRIOR TO FABRICATION OF PLENUMS, DUCTWORK, DUCT HANGERS/ SUPPORTS
Q	DENOTES EQUIPMENT, PIPE & DUCT AREAS OF DEMOLITION.
R	UNIT HEATERS TO BE INSTALLED 8'-0" A.F.F. UNLESS NOTED OTHERWISE.
S	ALL UNUSED PORTIONS OF LOUVERS FOR MECHANICAL EQUIPMENT OPENINGS SHALL BE BLOCKED-OFF USING INSULATED SHEET METAL PANELS UNLESS OTHERWISE INDICATED.
T	LINE ALL SUPPLY AND RETURN DUCT THE FIRST 15' FROM THE AIR HANDLER
U	COORDINATE LOCATION OF THERMOSTATS WITH LIGHT SWITCHES. LOCATE THERMOSTAT ON SAME WALL AS SWITCH.

REV#	DATE	DESCRIPTION	BY

WADE TRIM
555 South Saginaw Street, Suite 201
Flint, MI 48502
810.235.2555 / 800.841.0342
FAX: 810.235.4975
www.wadetrim.com

HRC
HUBBELL, ROTH & CLARK, INC
CONSULTING ENGINEERS SINCE 1915
555 HULET DRIVE BLOOMFIELD HILLS, MICH. 48303
P.O. BOX 824 48303 - 0824
PHONE: (248) 454-6300
FAX (1st. Floor): (248) 454-6312
FAX (2nd. Floor): (248) 338-2592
WEB SITE: http:// www.hrc-engr.com

CITY OF FLINT WPCF
WASTE UNLOADING STATION PROJECT

HVAC GENERAL NOTES, SYMBOLS, AND ABBREVIATIONS

ISSUED FOR:	DATE:	BY:
BIDS	2023.06.24	TSW

JOB NO. COF107601F

SHEET M-001

PLOTTED 6/23/2023 7:52:06 AM
BIM 360://COF1076-7-WPCF/WU_WT_M_R21.rvt

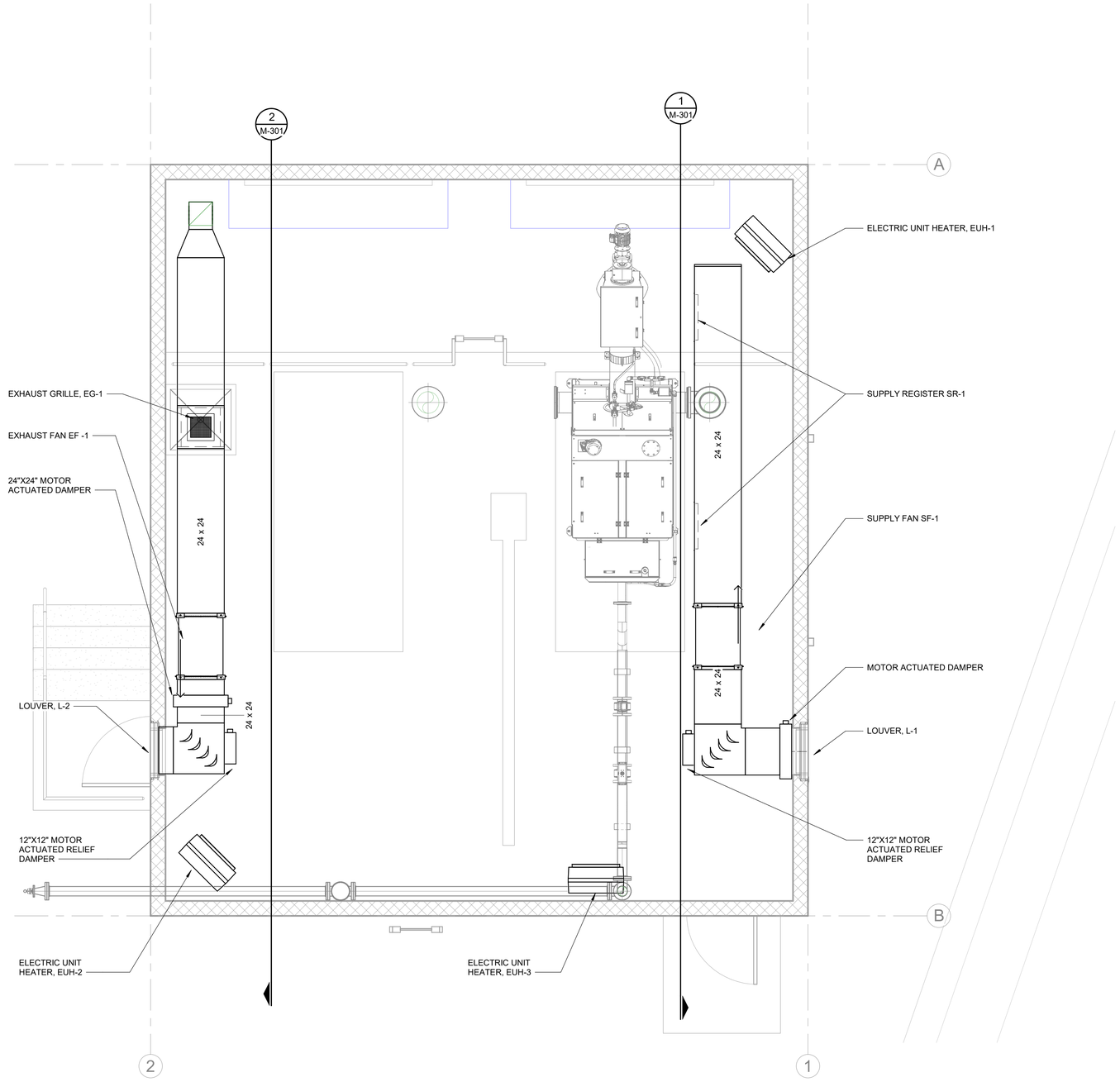

HVAC PLAN

SCALE: 3/8" = 1'-0"

REV#	DATE	DESCRIPTION	BY

CITY of FLINT MICHIGAN

WADE TRIM
555 South Saginaw Street, Suite 201
Flint, MI 48502
810.235.2555 / 800.841.0342
FAX: 810.235.4975
www.wadetrim.com

HRC
HUBBELL, ROTH & CLARK, INC
CONSULTING ENGINEERS SINCE 1915
555 HULET DRIVE
BLOOMFIELD HILLS, MICH.
P.O. BOX 824
48303 - 0824
PHONE: (248) 454-6300
FAX (1st. Floor): (248) 454-6312
FAX (2nd. Floor): (248) 338-2592
WEB SITE: http:// www.hrc-engr.com

CITY OF FLINT WPCF
WASTE UNLOADING STATION PROJECT

HVAC PLAN

ISSUED FOR:	DATE:	BY:
BIDS	2023.06.24	TSW

JOB NO.
COF107601F

SHEET
M-101

PLOTTED 6/23/2023 7:52:27 AM

BIM 360://COF107601-7-WPCF/WU_WT_M_R21.rvt

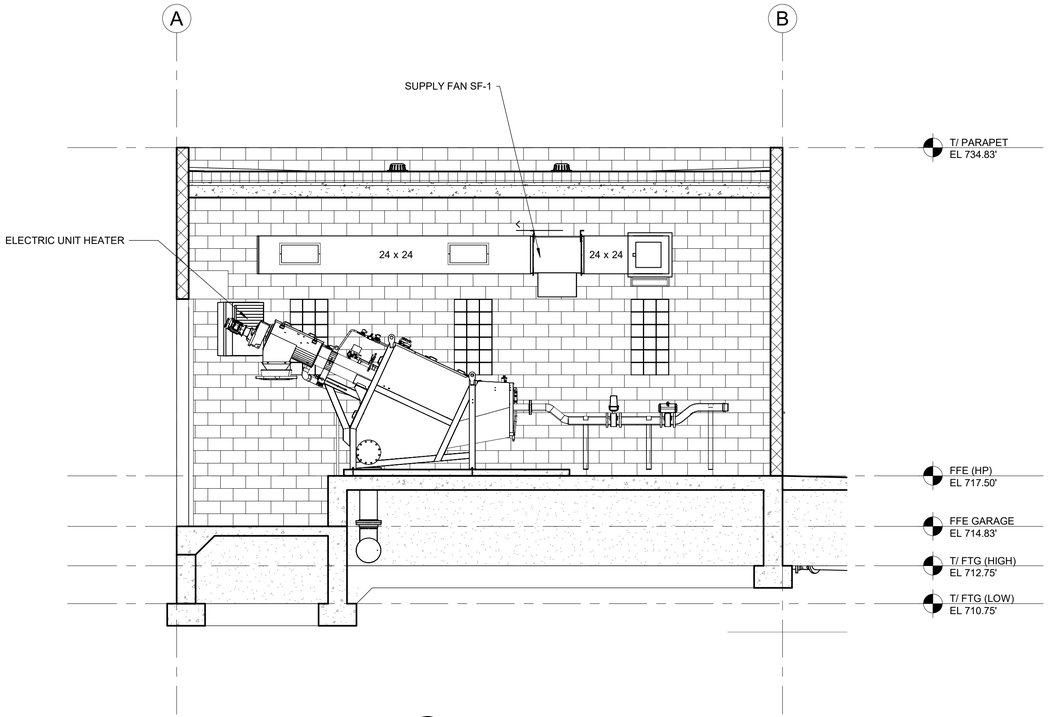

1 M-301 SECTION 1
SCALE: 1/4" = 1'-0"

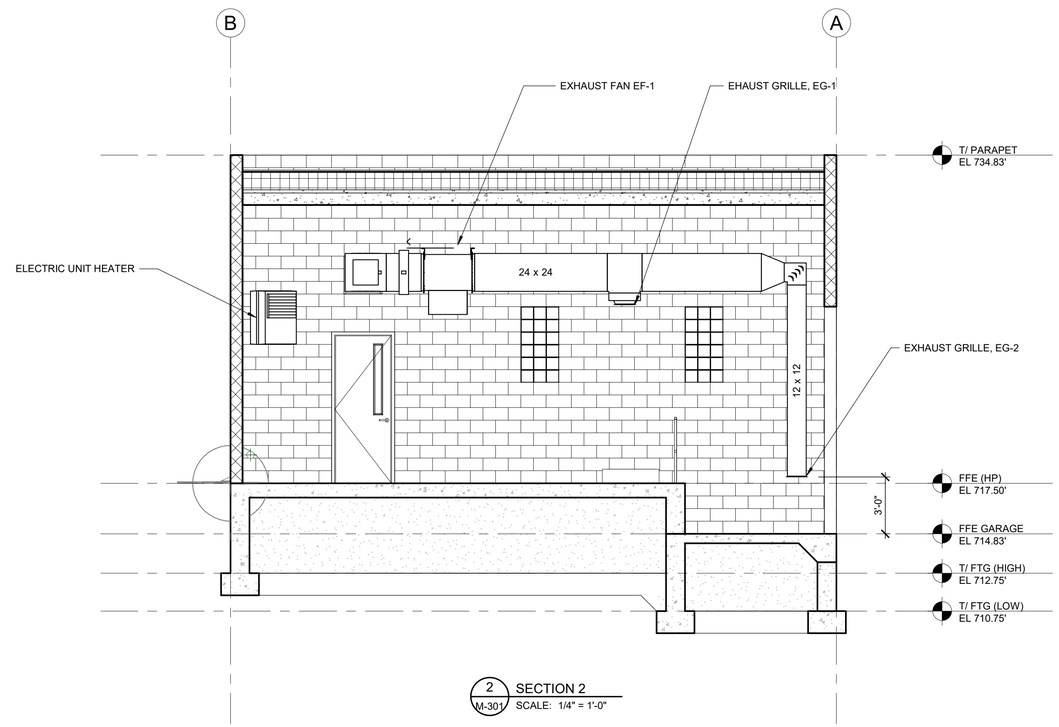

2 M-301 SECTION 2
SCALE: 1/4" = 1'-0"

REV#	DATE	DESCRIPTION	BY

WADE TRIM
555 South Saginaw Street, Suite 201
Flint, MI 48502
810.235.2555 / 800.841.0342
FAX: 810.235.1975
www.wadetrim.com

HRC
HUBBELL, ROTH & CLARK, INC
CONSULTING ENGINEERS SINCE 1915
555 HULET DRIVE
BLOOMFIELD HILLS, MICH.
P.O. BOX 824
48303 - 0824
PHONE: (248) 454-6300
FAX (1st. Floor): (248) 454-6312
FAX (2nd. Floor): (248) 338-2592
WEB SITE: http:// www.hrc-engr.com

CITY OF FLINT WPCF
WASTE UNLOADING STATION PROJECT

HVAC SECTIONS

ISSUED FOR:	DATE:	BY:
BIDS	2023.06.24	TSW

JOB NO.
COF107601F

SHEET
M-301

PLOTTED 6/23/2023 7:52:36 AM

BIM 360:/COF1076-7-WPCF/WU_WT_M_R21.rvt

FAN SCHEDULE

TAG	QUANTITY	LOCATION	SERVICE	CFM	ESP (IN W.G.)	DRIVE	MOTOR	MANUFACTURERER	MODEL	REMARKS
EF-1	1	WASTE UNLOADING	EXHAUST	4500	1.0	BELT	3 HP 460V, 3 PHASE	GREENHECK	QEI-16	ALL
SF-1	1	WASTE UNLOADING	SUPPLY	4500	1.0	BELT	3 HP 460V, 3 PHASE	GREENHECK	QEI-16	ALL

REMARKS:
1. PROVIDE NEMA 7 AND 9 DISCONNECT SWITCH.
2. PROVIDE INDUSTRIAL EPOXY COATING, GRAY
3. ALUMINUM MOTOR COVER
4. STAINLESS STEEL SHAFT
5. ALUMINUM HOUSING
6. TEFC PREMIUM EFFICIENCY MOTOR
7. GRIP NOTCH BELTS
8. ONE SPARE SET OF BELTS
9. BEARING AND GREASE FITTING
10. WIRING PIGTAIL
11. SPRING ISOLATORS
12. EXTENDED LUBE LINES
13. 2 YEAR WARRANTY
14. ALL STAINLESS STEEL FASTENERS
15. AUTO BELT TENSIONER
16. J-BOX MOUNTED AND WIRED
17. DUCT MOUNTED SMOKE DETECTOR, 120V
18. AIR FLOW SWITCH FCI FLT93F 4" 316L STAINLESS STEEL ELEMENT, 120V

AIR DISTRIBUTION SCHEDULE

TAG	DESCRIPTION	SIZE	MATERIAL	SS DAMPER	BORDER FRAME TYPE	MAX. PRESSURE DROP	MAX N.C.	MANUFACTURERER	MODEL
SR-1	RECTANGULAR SUPPLY REGISTER SHALL BE OPERABLE FROM FACE OF DIFFUSER	24" X 12"	316 SS	YES	DUCT MOUNT	0.10	30	TITUS	300RS-SS
EG-1	1/2" X 1/2" X 1/2" EGGCRATE TYPE EXHAUST AIR GRILLE	20" X 20"	316 SS	YES	DUCT MOUNT	0.10	30	TITUS	50R-SS
EG-2	1/2" X 1/2" X 1/2" EGGCRATE TYPE EXHAUST AIR GRILLE	12" X 12"	316 SS	YES	DUCT MOUNT	0.10	30	TITUS	50R-SS

WALL MOUNTED LOUVER SCHEDULE

TAG	QUANTITY	SIZE	MATERIAL	CFM	MAX VELOCITY	MAX. PRESSURE DROP (IN W.G.)	FREE AREA (SQ FT)	BLADE ANGLE	FRAME DEPTH	MANUFACTURER	MODEL	REMARKS
L-1	1	36" x 38"	EXTRUDED ALUMINUM	2860	1120	0.10	2.69	45	4"	RUSKIN	ELF445DXH	1,2,3,4
L-2	1	36" X 36"	EXTRUDED ALUMINUM	2860	1120	0.10	2.69	45	4"	RUSKIN	ELF445DXH	1,2,3,4

REMARKS:
1. FINISH COLOR SELECTED BY OWNER. COORDINATE WITH ARCHITECT.
2. PROVIDE SILL EXTENSION.
3. PROVIDE ALUMINUM BIRD SCREEN.

ELECTRICAL UNIT HEATER SCHEDULE

TAG	LOCATION	VOLTS/PHASE	HEATING	MANUFACTURER	REMARKS
EUH-1,2,3	WASTE UNLOADING	480/3	20 kW (EACH)	MODINE	EXPLOSION PROOF

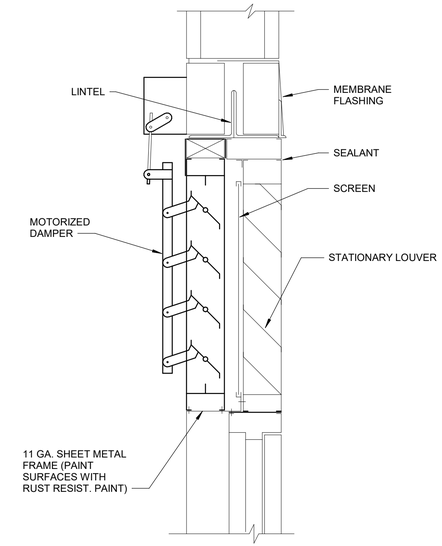

WALL LOUVER DETAIL
ABOVE DOOR
(BLOCK FACING)

REV#	DATE	DESCRIPTION	BY

WADE TRIM
555 South Saginaw Street, Suite 201
Flint, MI 48502
810.235.2555 / 800.841.0342
FAX: 810.235.4975
www.wadetrim.com

HRC
HUBBELL, ROTH & CLARK, INC
CONSULTING ENGINEERS SINCE 1915
555 HULET DRIVE
BLOOMFIELD HILLS, MICH.
P.O. BOX 824
48303 - 0824
PHONE: (248) 454-6300
FAX (1st. Floor): (248) 454-6312
FAX (2nd. Floor): (248) 338-2592
WEB SITE: http:// www.hrc-engr.com

CITY OF FLINT WPCF
WASTE UNLOADING STATION PROJECT

HVAC SCHEDULE AND DETAILS

ISSUED FOR:	DATE:	BY:
BIDS	2023.06.24	TSW

JOB NO. COF107601F

SHEET M-601

PLOTTED 6/23/2023 7:52:36 AM

BIM 360://COF107601-7-WPCF/WU_VT_M_R21.rvt

CIRCUIT BREAKER (CB)
- RATINGS AND NO.
OF POLES AS SHOWN.

100AF
80AT
3P
OR
20A
3P

30A, 3-POLE
DISCONNECT SWITCH

SEPARATELY MOUNTED
COMBINATION MOTOR
STARTER

FUSED

FUSED CUTOUT

FUSIBLE SWITCH

NON-FUSED SWITCH

DISCONNECT OR
DRAWOUT CONNECTION

THERMAL OVERLOAD
ELEMENT

THERMAL OVERLOAD
RELAY CONTACT

OL

480 VAC 3-PHASE
MOTOR

120 VAC 1-PHASE
MOTOR

120 VAC 1-PHASE
MOTORIZED DAMPER

TRANSFER SWITCH

X - INDICATES TYPE:

ATS - AUTOMATIC
MTS - MANUAL

X

GENERATOR

G

TRANSFORMER

3-PHASE, 3-WIRE
DELTA CONNECTION

3-PHASE, 4-WIRE GROUNDED
WYE CONNECTION

CONTROL POWER
TRANSFORMER (CPT)

CPT

VOLTAGE TRANSFORMER (VT)

CURRENT TRANSFORME (CT)

MOTOR STARTER

MS

CONTROL RELAY

CR

TIMING RELAY

TR

GROUND

LIGHTNING ARRESTER

LOW VOLTAGE SURGE
PROTECTIVE DEVICE

SPD

ELECTRICAL CONNECTION

NO ELECTRICAL CONNECTION

OR

NORMALLY-OPEN CONTACT

NORMALLY-CLOSED CONTACT

NORMALLY-OPEN CONTACT FOR
ON-DELAY TIMING RELAY

NORMALLY OPEN CONTACT FOR
OFF-DELAY TIMING RELAY

NORMALLY-OPEN LIMIT SWITCH

NORMALLY-CLOSED LIMIT SWITCH

NORMALLY OPEN TEMPERATURE
SWITCH; CLOSE ON RISING
TEMPERATURE

NORMALLY CLOSED TEMPERATURE
SWITCH; OPEN ON RISING
TEMPERATURE

NORMALLY OPEN FLOW SWITCH;
CLOSE ON INCREASING FLOW

NORMALLY CLOSED FLOW
SWITCH; OPEN ON
INCREASING FLOW

NORMALLY OPEN
LEVEL SWITCH

NORMALLY CLOSED
LEVEL SWITCH

NORMALLY OPEN
PRESSURE SWITCH

NORMALLY CLOSED
PRESSURE SWITCH

NORMALLY-OPEN
PUSHBUTTON

NORMALLY-CLOSED
PUSHBUTTON

OFF
HAND
AUTO

TYPICAL SELECTOR SWITCH

SEAL MOISTURE SENSOR

SM

TEMPERATURE SENSOR

TS

LOCAL CONTROL PANEL

LCP

FIELD WIRING EXTERNAL TO
CONTROL PANEL

INTERLOCK

X

X - INDICATES TYPE:

E - ELECTRICAL;
M - MECHANICAL;
K - KEY

TRANSFORMER

T

JUNCTION BOX

J
OR
JB

CIRCUIT CONTINUATION

CONDUIT STUBBED OUT
AND CAPPED

CONDUIT TURNING UP

CONDUIT TURNING DOWN

HOME RUN TO PANEL, 2#12
+ 1#12 GND IN 3/4"C
UNLESS OTHERWISE NOTED

ABOVE GROUND CONDUIT RUN

UNDERGROUND CONDUIT RUN

GROUND CABLE

GROUND ROD

FIELD DEVICES

SELECTOR SWITCH

SS

PUSHBUTTON

PB

PRESSURE ELEMENT/PRESSURE
INDICATING TRANSMITTER

PE
PT

LEVEL ELEMENT

LE

LEVEL INDICATING
TRANSMITTER

LT
LIT

FLOW ELEMENT

FE

FLOW INDICATING TRANSMITTER

FT
FIT

FLOW SWITCH

FS

FLOAT SWITCH

LSH
LSL

LIMIT SWITCH

ZS

SOLENOID VALVE

S

GAS DETECTOR

GE

CONTROL STATION

THERMOSTAT

T
T-STAT

MOTORIZED DAMPER

MD
M

PRESSURE SWITCH

PS

SINGLE DATA

SINGLE TELEPHONE

DOUBLE DATA / VOIP

FLOOR MOUNTED DATA

WELDER RECEPTACLE

DUPLEX RECEPTACLE

X

DUPLEX RECEPTACLE GFCI

X

QUAD-DUPLEX RECEPTACLE

X

SIMPLEX RECEPTACLE

X

FLOOR MOUNTED RECEPTACLE

X
X

X - INDICATES TYPE:

GFCI - GROUND FAULT CIRCUIT
INTERRUPTER

INDICATING LIGHT

X

PUSH-TO-TEST PILOT LIGHT

X

X INDICATES LENS COLOR:

R - RED
G - GREEN
B - BLUE
Y - YELLOW
W - WHITE
A - AMBER

LIGHTING

PHOTOCELL

CEILING/PENDANT-MOUNTED LUMINAIRE

X
Y

WALL-MOUNTED LUMINAIRE

X
Y

CEILING/PENDANT-MOUNTED
LIGHT FIXTURE

X Y , X Y

EMERGENCY LIGHT FIXTURE

X Y

EMERGENCY LIGHT
FIXTURE

X , X

WALL MOUNTED
EXIT/EMERGENCY LIGHT

X

DOUBLE-FACED CEILING OR
WALL-MOUNTED EXIT LIGHT;
DIRECTIONAL ARROWS (IF
REQUIRED) AS INDICATED ON
PLANS

X , X

SINGLE-FACED CEILING OR
WALL-MOUNTED EXIT LIGHT;
DIRECTIONAL ARROWS (IF
REQUIRED) AS INDICATED ON
PLANS

X , X

AREA OR ROADWAY LIGHT -
POLE-MOUNTED

X
Y

X - INDICATES FIXTURE TYPE PER LIGHTING
FIXTURE SCHEDULE OR DETAILS
Y - SWITCH CONTROL

TOGGLE SWITCH

S
X

X - INDICATES TYPE:

NONE - SINGLE POLE
3 - THREE-WAY
4 - FOUR-WAY
HP - HORSEPOWER RATED
K - KEY SWITCH
P - PILOT LIGHT
L - LIGHTED HANDLE
TE - MANUAL MOTOR STARTER WITH THERMAL ELEMENT
OS - OCCUPANCY SENSOR
DM - DIMMABLE

PANELBOARD (LESS THAN 250V)

PANELBOARD (250V TO 600V)

ELECTRICAL EQUIPMENT ENCLOSURE. AS
INDICATED ON PLANS

OCCUPANCY SENSOR CEILING
MOUNTED

OS

COMMUNICATION

CELL PHONE REPEATER

OUTDOORS ANTENNA

END OF LINE
RESISTANCE PANEL

EOL-P

FIRE ALARM

FIRE ALARM ANNUNCIATOR

FAA

FIRE ALARM CONTROL PANEL

FACP

FIRE ALARM ANNUNCIATOR
PANEL

FAAP

FIRE ALARM MANUAL STATION, MH=4'-0" AFF UNO

F

FIRE ALARM CONTACT, TAMPER SWITCH

TS

FIRE ALARM CONTACT, TAMPER SWITCH
INSIDE KNOX KEYBOX

TS

FIRE ALARM SMOKE DETECTOR,
CEILING MOUNTED

X

X - INDICATES TYPE:

I - IONIZATION TYPE
P - PHOTOELECTRIC TYPE

FIRE ALARM ADDRESSABLE DUCT TYPE
SMOKE DETECTOR, MOUNTED ON DUCT

FIRE ALARM HEAT DETECTOR, CEILING
MOUNTED

FIRE ALARM BELL WITH PROTECTIVE CAGE, MH=
7'-6" AFG UNO

X

FIRE ALARM SPEAKER, MH=10'-0" AFF UNO

X

FIRE ALARM STROBE, MH=6'-8" AFF UNO

X

FIRE ALARM BELL AND FLASHING LIGHT
COMBINATION UNIT, MH=7'-6" AFG UNO

X

FIRE ALARM SPEAKER WITH STROBE, MH=6'-8"
AFF UNO

X

X - INDICATES TYPE:

NONE - GENERAL ALARM DEVICE
F - FIRE ALARM DEVICE

INTERFACE UNIT , MH=4'-0" AFF UNO

I/U
AIM

INTERFACE UNIT, CEILING MOUNTED
UNO

CM

NOTES:

1. STANDARD ELECTRICAL LEGEND SHEET. NOT ALL
SYMBOLS MAY BE USED ON THIS PROJECT.

REV#	DATE	DESCRIPTION	BY

CITY of FLINT MICHIGAN

WADE TRIM
555 South Saginaw Street, Suite 201
Flint, MI 48502
810.235.2555 / 800.841.0342
FAX: 810.235.4875
www.wadetrim.com

HRC
HUBBELL, ROTH & CLARK, INC
CONSULTING ENGINEERS SINCE 1915
555 HULET DRIVE
BLOOMFIELD HILLS, MICH.
P.O. BOX 824
48303 - 0824
PHONE: (248) 454-6300
FAX (1st. Floor): (248) 454-6312
FAX (2nd. Floor): (248) 338-2592
WEB SITE: http:// www.hrc-eng.com

FLINT WWTP
WASTE UNLOADING STATION

ELECTRICAL SYMBOLS AND ABBREVIATIONS

ISSUED FOR:	DATE:	BY:
BIDS	2023.06.24	TSW

JOB NO. COF10601F

SHEET E-001

PLOTTED 6/22/2023 6:22:55 PM

V:\2022\002230091\Revit\WU_HRC_E_R21.rvt

GENERAL ELECTRICAL NOTES:

(APPLY TO ALL DRAWINGS)

1. THE CONTRACTOR SHALL VISIT THE JOB SITE AND THOROUGHLY CHECK THE FIELD CONDITIONS AND THE EXISTING ELECTRICAL INSTALLATION AND UTILITIES PRIOR TO SUBMITTING HIS BID.
2. OTHER PROJECTS ARE, OR MAY BE, UNDER CONSTRUCTION AT THIS SITE, AND THIS CONTRACTOR SHALL COORDINATE WITH THEM SO AS NOT TO DELAY THEIR SCHEDULES OR IMPEDE THEIR WORK.
3. COORDINATE ALL NEW ELECTRICAL UNDERGROUND WORK WITH NEW AND EXISTING UNDERGROUND UTILITIES BEFORE INSTALLATION.
4. ALL EMPTY CONDUITS SHALL BE PROVIDED WITH A FISH LINE.
5. ALL UNDERGROUND CONDUITS SHALL BE P.V.C., EXCEPT WHERE ENTERING MANHOLES, HANDHOLES, BUILDINGS, LIGHT POLE BASES, AND TRANSFORMER PAD. UNDERGROUND CONDUITS AND/OR DUCTS SHALL BE RIGID GALVANIZED ALUMINUM WITHIN 5'-0" OF THE STRUCTURE. ALL CONDUITS AND/OR DUCTS UNDER BUILDINGS SHALL BE RIGID GALVANIZED STEEL.
6. PROVIDE WATERTIGHT HUBS AT CONDUIT ENTRANCES TO ALL ENCLOSURES MOUNTED OUTDOORS AND AT ALL WATERTIGHT (NEMA TYPE 4 & 4X) ENCLOSURES MOUNTED INDOORS. ALL NEMA TYPE 4 & 4X ENCLOSURES, EXCEPT THOSE IN CORROSIVE AREAS, SHALL BE EQUIPPED WITH A DRAIN/BREATHER FITTING.
7. EXPANSION OR EXPANSION/DEFLECTION FITTINGS SHALL BE PROVIDED FOR ALL CONDUITS CROSSING BUILDING EXPANSION JOINTS.
8. ALL POWER FEEDERS SHALL BE RUN IN INDIVIDUAL CONDUITS, FROM SOURCE TO LOAD, AS INDICATED IN SCHEDULES, WIRING DIAGRAMS, OR BY HOME RUNS ON THE PLANS.
9. ALL CONDUITS SHALL BE ROUTED TO AVOID OPENINGS IN FLOORS, ROOFS, AND WALLS. LADDERS UP WALLS SHALL NOT BE CROSSED BY EXPOSED CONDUIT RUNS. PROVIDE THE MINIMUM CLEAR SPACE REQUIRED BY ALL GOVERNING CODES BETWEEN HANDRAILS AND ALL ELECTRICAL ENCLOSURES AND RACEWAYS, WHICH IN NO CASE SHALL BE LESS THAN 1 1/2" CLEAR.
10. ALL CONDUITS FOR 480VAC POWER FEEDERS, BRANCH CIRCUITS, AND INSTRUMENTATION SHALL BE RUN EXPOSED OVERHEAD, UNLESS SHOWN OTHERWISE ON THE PLANS.
11. ALL ELECTRICAL FLOOR MOUNTED EQUIPMENT SUCH AS MOTORS, CONTROL PANELS, AND METALLIC SUPPORT RACKS SHALL HAVE A #2 (UNLESS OTHERWISE NOTED) BARE GROUND CONDUCTOR TIE BETWEEN THE MOTOR FRAME, ENCLOSURE, OR SUPPORT LEG AND THE BUILDING GROUND SYSTEM.
12. GROUND CONDUCTOR SPLICING AND BONDING SHALL BE ACCOMPLISHED BY THE USE OF EXOTHERMIC WELDING.
13. PROVIDE A GREEN GROUND CONDUCTOR IN ALL SYSTEMS CONDUITS, EXCEPT INSTRUMENT SIGNAL AND ALARM CONDUITS, INCLUDING BRANCH CIRCUIT CONDUITS FOR LIGHTING AND RECEPTACLES. GROUND CONDUCTOR SIZING SHALL BE PER N.E.C. TABLE 250.122 (MINIMUM) WHERE NOT SIZED ON THE DRAWINGS.
14. COORDINATE EXACT LOCATION AND MOUNTING HEIGHTS OF ALL LIGHTING FIXTURES AND ELECTRICAL DEVICES WITH MECHANICAL PIPING AND DUCTWORK BEFORE INSTALLATION.
15. ALL THREADED MECHANICAL CONNECTIONS ON ELECTRICAL EQUIPMENT (CONDUIT, COUPLINGS, JUNCTION BOXES, ETC.) INSTALLED WITHIN WET AREAS, HAZARDOUS AREAS, OR OUTDOORS SHALL BE COATED WITH ANTI-SEIZE COMPOUND PRIOR TO INSTALLATION.
16. ALL WALL AND RACK MOUNTED DISCONNECT SWITCHES, CONTROL PANELS, AND LIGHTING PANELS SHALL BE 5'-6" TO TOP, ABOVE FINISHED FLOOR.
17. ALL WEATHERPROOF (W.P.) DUPLEX RECEPTACLES SHALL BE INSTALLED SUCH THAT COVER DOORS OPEN UPWARD.
18. ALL EXPOSED METALLIC ELECTRICAL EQUIPMENT, PULL BOXES, JUNCTION BOXES, CONDUITS, SUPPORTS, BRACKETS, HANGERS, NUTS, BOLTS, ETC. LOCATED WITHIN HAZARDOUS OR CORROSIVE AREAS, SHALL BE P.V.C. COATED WITH 40 MILS (MIN.) COVERING. WHERE FACTORY P.V.C. COATING IS NOT AVAILABLE OR WHERE P.V.C. COATING WOULD VOID U.L.LISTING OR LABELING, FACTORY OR FIELD COATING WITH A CORROSION RESISTANT, EPOXY PAINT SHALL BE PROVIDED.
19. ALL PENETRATIONS OF FIRE WALLS OR FLOORS SHALL BE SEALED AFTER INSTALLATION OF CONDUIT WITH A FIRE RETARDANT SEALANT THAT IS RATED THE SAME AS THE FIRE WALL OR FLOOR.
20. ALL CONDUITS AND/OR SLEEVES THAT PASS THROUGH WALLS OR FLOORS SEPARATING HAZARDOUS AREAS FROM NON-HAZARDOUS AREAS SHALL BE SEALED GAS-TIGHT WITH NON-METALLIC, NON SHRINK GROUT AFTER CONDUIT IS INSTALLED.
21. ALL WALL MOUNTED ELECTRICAL EQUIPMENT SHALL HAVE A 1/2" (MINIMUM) AIR SPACE BETWEEN WALL AND EQUIPMENT (PROVIDE NON-CORROSIVE SPACERS OR BRACKETS AS REQUIRED).
22. FOR ALL WALL MOUNTED EQUIPMENT WITHIN HAZARDOUS OR CORROSIVE AREAS USE STAINLESS STEEL ANCHORS AND 1/2" STAINLESS STEEL SPACERS ON STAINLESS STEEL ANCHOR BOLTS TO PROVIDE A 1/2" AIR SPACE BETWEEN THE EQUIPMENT AND THE WALL.
23. ALL FLOOR OR PAD MOUNTED ELECTRICAL ENCLOSURES SHALL BE SPACED 1" OUT FROM EXTERIOR WALLS (MINIMUM).
24. FOR ALL 120 VAC LIGHTING AND RECEPTACLE CIRCUITS, RUN 2-#12 (MINIMUM) + #12 GRD., 3/4"C. TO THE LIGHTING PANELBOARD INDICATED, UNLESS NOTED OTHERWISE. SEE THE SPECIFICATIONS FOR ADDITIONAL REQUIREMENTS FOR BRANCH CIRCUIT WIRING.
25. FOR EACH INTRINSICALLY SAFE CIRCUIT, RUN 2-#14 AWG (MINIMUM), OR 1 PAIR-#18 FOIL SHIELDED, IN 3/4" R.G.S. (MINIMUM). INTRINSICALLY SAFE (I.S.) CIRCUITS MAY BE RUN WITH OTHER I.S. CIRCUITS IN THE I.S. CONDUIT SYSTEM, BUT SHALL NOT BE RUN IN THE SAME CONDUIT, RACEWAY, WIRE DUCT, ETC., WITH ANY NON-INTRINSICALLY SAFE CIRCUITS, NOR SHALL I.S. CONDUCTORS COME IN CONTACT IN ANY FASHION WITH NON-INTRINSICALLY SAFE CONDUCTORS. I.S. CIRCUIT INSTALLATION SHALL MEET ALL REQUIREMENTS OF THE LATEST REVISIONS OF N.E.C. ARTICLE 504, ANSI/ISA RP-12.06, AND ANSI/UL 913.
26. 4-20 MA, INSTRUMENT SIGNAL AND DC TOTALIZED PULSE CABLES, MAY BE RUN WITH OTHER INSTRUMENT SIGNAL CABLES IN THE INSTRUMENT CONDUIT SYSTEM. INSTRUMENT SIGNALS SHALL NOT BE RUN IN THE SAME CONDUIT WITH ANY OTHER TYPE OF ALARM, CONTROL AND/OR POWER WIRING.
27. DC ALARM WIRING SHALL BE #14 AWG AND MAY BE RUN WITH OTHER ALARM WIRING IN THE ALARM CONDUIT SYSTEM. ALARM WIRING SHALL NOT BE RUN IN THE SAME CONDUIT WITH ANY OTHER TYPE INSTRUMENT SIGNAL, CONTROL, OR POWER WIRING, UNLESS OTHERWISE SHOWN ON THE DRAWINGS.
28. IN AREAS WHERE ELECTRICAL WORK DISTURBS EXISTING SOD, GROUND SHALL BE REGRADED AS REQUIRED AND SOD SHALL BE REPAIRED OR REPLACED, AS REQUIRED, TO RETURN THE SITE TO A CONDITION MEETING OR EXCEEDING THAT PRIOR TO THE BEGINNING OF WORK.
29. ALL SALVAGED MATERIALS SHALL BE TURNED OVER TO THE OWNER OR DISPOSED OF AS DIRECTED BY THE OWNER.

ELECTRICAL ABBREVIATIONS LIST

A	AMPERE, AUTO, OR AMBER
AC	ALTERNATING CURRENT
A/C	AIR CONDITIONING
AF	CIRCUIT BKR FRAME SIZE
A/G	ABOVE GROUND
AIC	AMPS INTERRUPTING CAPACITY
AL	ALUMINUM
AM	AMMETER
AMP	AMPERES
ANN	ANNUNCIATOR
AS	AMMETER SWITCH
AT	CIRCUIT BREAKER TRIP SETTING
ATS	AUTOMATIC TRANSFER SWITCH
AWG	AMERICAN WIRE GAUGE
BATT	BATTERY
BKR	BREAKER
BL	BLUE
BLK	BLOCK OR BLACK
BLWR	BLOWER
BRN	BROWN
C	CONDUIT OR CLOSED CONDUCTOR
CAP	CAPACITOR
CB	CIRCUIT BREAKER
CKT	CIRCUIT
CLF	CURRENT LIMITING FUSE
CMPT	COMPARTMENT
COM	COMMON
COMM	COMMUNICATION
COMP	COMPRESSOR
COND	CONDUCTOR
CONT	CONTINUED
CP	CONTROL PANEL OR CHEMICAL PUMP
CPT	CONTROL POWER XFMR
CR	CONTROL RELAY
CT	CURRENT TRANSFORMER
CL	CONTROL LOOP
CH	CHANNEL
DCS	DISTRIBUTED CONTROL SYSTEM
DISC	DISCONNECT
DEMO	DEMOLITION
DISTR	DISTRIBUTION
DISCHG	DISCHARGE
DM	DEMAND METER
DP	DISTRIBUTION PANEL
DPDT	DOUBLE POLE, DOUBLE THROW
DPST	DOUBLE POLE, SINGLE THROW
DSD	DUCT SMOKE DETECTOR
E	EMERGENCY
EMERG	EMERGENCY
EMT	ELECTRICAL METALLIC TUBING
ENCL	ENCLOSURE
ETM	ELAPSED TIME METER
EP	EXPLOSION
EF	EXHAUST FAN
EWS	EYE WASH STATION
F	FREQUENCY OR FUSE
FDR	FEEDER
FLA	FULL LOAD AMPERES
FLUOR	FLUORESCENT
FO	FIBER OPTIC
FT	FLOW TRANSMITTER
FVR	FULL VOLT. REVERSING
FVNR	FULL VOLTAGE NON-REVERSING
G	GROUND
GEN	GENERATOR
GFCI	GROUND FAULT CIRCUIT INTERRUPTER
GND	GROUND
GRN	GREEN
H	HAND
HC	HAND CONTROL
HD	HEAT DETECTOR
HH	HANDHOLE
HID	HIGH INTENSITY DISCHARGE
HOA	HAND-OFF-AUTOMATIC
HOR	HAND-OFF-REMOTE
HP	HORSEPOWER
HPS	HIGH PRESSURE SODIUM
HS	HAND SWITCH
HTR	HEATER
HV	HIGH VOLTAGE
HZ	HERTZ
INCAND	INCANDESCENT
IND	INDICATION
INST	INSTANTANEOUS
INSTR	INSTRUMENT
I/O	INPUT/OUTPUT
ISO	ISOLATION
JB	JUNCTION BOX
JCT	JUNCTION
KA	THOUSAND AMPERES
KAIC	THOUSAND AMPERES INTERRUPTING CAPACITY
KCMIL	THOUSAND CIRCULAR MILS
KVA	KILOVOLT AMPERE
KW	KILOWATT
L	LOCAL
LCP	LOCAL CONTROL PANEL
LCS	LOCAL CONTROL STATION
LOC	LOCAL
LOR	LOCAL-OFF-REMOTE
LOS	LOCKOUT STOP PUSHBUTTTON
LP	LIGHTING PANEL
LRA	LOCKED ROTOR AMPS
LS	LEVEL SWITCH
LT	LEVEL TRANSMITTER
LTG	LIGHTING
LTS	LIGHTS
LV	LOW VOLTAGE
M	MOTOR CONTACTOR COIL
MA	MILLIAMPERE
MCC	MOTOR CONTROL CENTER
MCM	THOUSAND CIRCULAR MILS
MCP	MOTOR CIRCUIT PROTECTOR
MFG	MANUFACTURER
MH	METAL HALIDE, MOUNTING HEIGHT OR MANHOLE
MLO	MAIN LUGS ONLY
MOV	MOTOR OPERATED VALVE
MPZ	MINI-POWER ZONE
MS	MOTOR STARTER
MTR	MOTOR
MTS	MANUAL TRANSFER SWITCH
MV	MEDIUM VOLTAGE
N	NEUTRAL
N/A	NOT APPLICABLE
NC	NORMALLY CLOSED
NEMA	NATIONAL ELECTRICAL MANUFACTURER'S ASSOCIATION
NF	NON-FUSIBLE
NIC	NOT IN CONTRACT
NL	NIGHT LIGHT
NO	NORMALLY OPEN
NP	NAMEPLATE
NTS	NOT TO SCALE
O	OPEN OR OFF
OL	OVERLOAD
ORN	ORANGE
P	POLE
PA	PUBLIC ADDRESS
PB	PUSHBUTTON OR PULLBOX
PC	PHOTOCELL
PF	POWER FACTOR
PH	PHASE
PL	PILOT LIGHT
PLC	PROGRAMMABLE LOGIC CONTROLLER
PNL	PANEL
PMP	PUMP
PP	POWER PANEL OR PROCESSOR PANEL
POS	POSITION
POT	POTENTIAL
PR	PAIR
PRI	PRIMARY
PS	PRESSURE SWITCH OR POWER SUPPLY
PT	POTENTIAL TRANSFORMER OR PRESSURE TRANSMITTER
PTZ	PAN-TILT-ZOOM
PWR	POWER
QTY	QUANTITY
R	REMOTE OR RED
RAC	RIGID ALUMINUM CONDUIT
RECPT	RECEPTACLE
REF	REFERENCE
REG	REGULATOR
RGS	RIGID GALVANIZED STEEL
RMS	ROOT MEAN SQUARE
RTU	REMOTE TELEMETRY UNIT
RVA	REDUCED VOLTAGE AUTO TRANSFORMER
RVSS	REDUCED VOLTAGE SOFT START
S	SPARE
S.S.	STAINLESS STEEL
SA	SURGE ARRESTOR
SEQ	SEQUENCE
SF	SUPPLY FAN
SH	SODIUM HYPOCHLORITE
SHLD	SHIELD
SIG	SIGNAL
SP	SPARE
SP HTR	SPACE HEATER
SPD	SPEED, SURGE PROTECTIVE DEVICE
SPDT	SINGLE POLE, DOUBLE THROW
SPST	SINGLE POLE, SINGLE THROW
SS	SOLID STATE
SSL	SPEED SWITCH LOW
SSW	SELECTOR SWITCH
STR	STARTER
SW	SWITCH
SWBD	SWITCHBOARD
SWGR	SWITCHGEAR
SYS	SYSTEM
TACH	TACHOMETER
TB	TERMINAL BLOCK
TD	TIME DELAY
TEL	TELEPHONE
TERM	TERMINAL OR TERMINATION
TL	TWIST LOCK
TR	TIMING RELAY
TS	TEMPERATURE SWITCH
TSP	TWISTED, SHIELDED PAIR
TSTAT	THERMOSTAT
TTC	TELEPHONE TERMINAL CABINET
TVSS	TRANSIENT VOLTAGE SURGE SUPPRESSOR
TYP	TYPICAL
UC	UNDER COUNTER
UG	UNDERGROUND
UH	UNIT HEATER
UNO	UNLESS NOTED OTHERWISE
UPS	UNINTERRUPTIBLE POWER SUPPLY
UTIL	UTILITY
V	VOLTAGE OR VOLTS
VA	VOLT AMPERES
VAR	VOLT-AMPERE REACTIVE
VFD	VARIABLE FREQUENCY DRIVE
VM	VOLTMETER
VS	VOLTMETER SWITCH
VP	VAPOR PROOF
W	WATT OR WIRE
W/	WITH
W/O	WITHOUT
WH	WHITE
WHM	WATT HOUR METER
WP	WEATHER-PROOF
WT	WEIGHT
WTR	WATER
XFMR	TRANSFORMER
XMTR	TRANSMITTER
XP	EXPLOSION PROOF
Y	YELLOW
ZS	POSITION (LIMIT) SWITCH
∟	ANGLE
@	AT
Δ	DELTA
°	DEGREES
'	FEET
"	INCHES
#	NUMBER
Ø	PHASE
CL	CENTER LINE
P	PLATE

REV#	DATE	DESCRIPTION	BY

WADE TRIM
555 South Saginaw Street, Suite 201
Flint, MI 48502
810.235.2555 / 800.841.0342
FAX: 810.235.4375
www.wadetrim.com

HRC
HUBBELL, ROTH & CLARK, INC
CONSULTING ENGINEERS SINCE 1915
555 HULET DRIVE, BLOOMFIELD HILLS, MICH. — P.O. BOX 824, 48303 - 0824
PHONE: (248) 454-6300
FAX (1st. Floor): (248) 454-6312
FAX (2nd. Floor): (248) 338-2592
WEB SITE: http://www.hrc-eng.com

FLINT WWTP
WASTE UNLOADING STATION

GENERAL NOTES AND ABBREVIATIONS

ISSUED FOR:	DATE:	BY:
BIDS	2023.06.24	TSW

JOB NO. COF10601F

SHEET E-002

PLOTTED 6/22/2023 6:22:57 PM

V:\2023\0\2023009\1\E\Revit\WU_HRC_E_R21.rvt

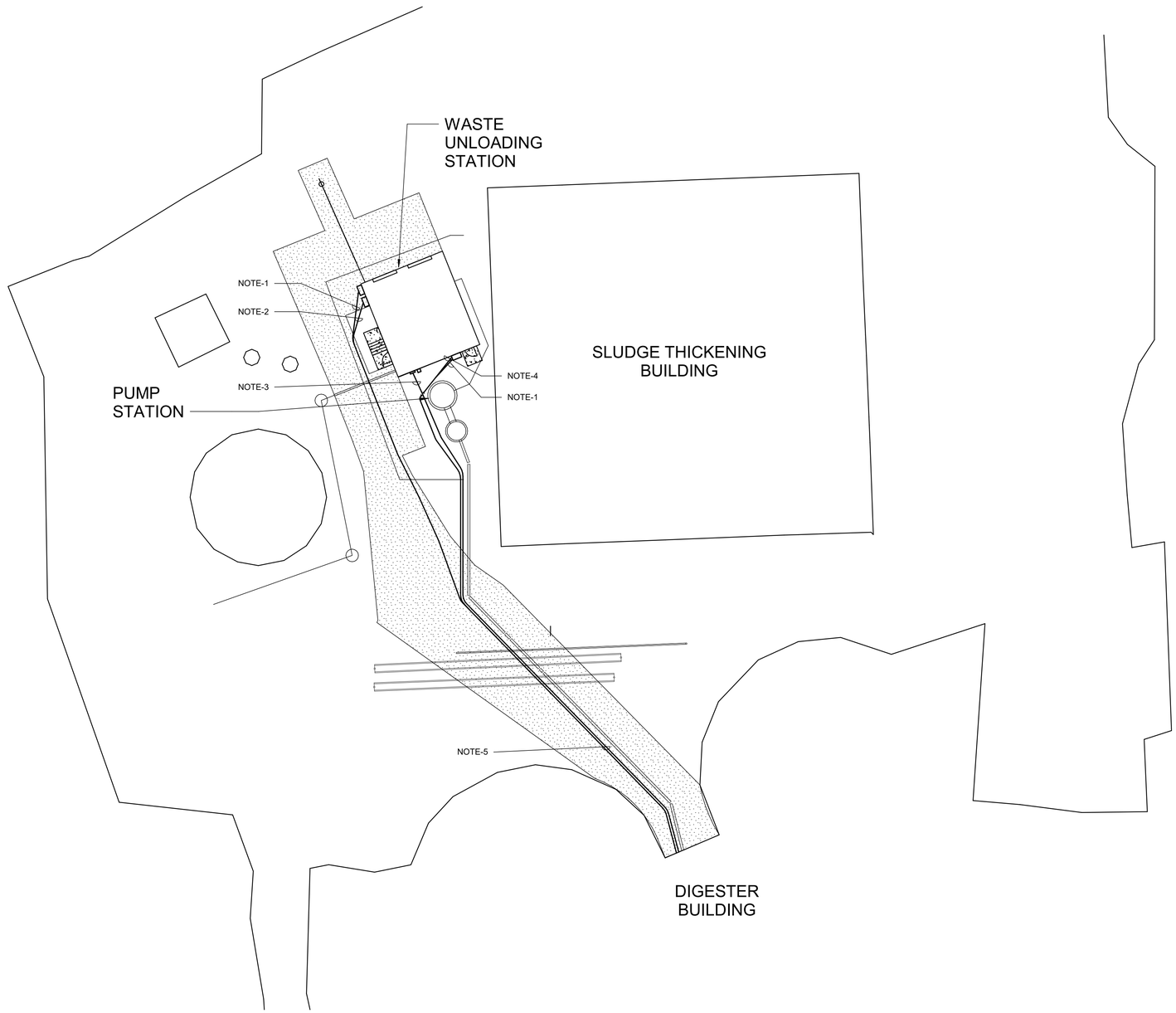

ELECTRICAL SITE PLAN

SCALE: 1" = 20'-0"

PLAN NOTES:

1. 4-STRAND FIBER-OPTIC CABLE, 1 1/4"C.
2. 1 1/4"C. SPARE, EMPTY WITH PULL ROPE.
3. 3-#1/0 + 1-#6 GRD., 1 1/2"C.
4. 3-#4 + 1-#8 GRD., 1"C.
5. ROUTE CONDUITS BELOW WALL OF DIGESTER BUILDING THEN UP THROUGH FLOOR ALONG WALL AND OVERHEAD TO CONTROL PANEL AND MCC. COORDINATE INSTALLATION WITH NEW PIPING AT BUILDING ENTRANCE.

REV#	DATE	DESCRIPTION	BY

WADE TRIM
555 South Saginaw Street, Suite 201
Flint, MI 48502
810.235.2555 / 800.841.0342
FAX: 810.235.4975
www.wadetrim.com

HRC
HUBBELL, ROTH & CLARK, INC
CONSULTING ENGINEERS SINCE 1915
555 HULET DRIVE
BLOOMFIELD HILLS, MICH.
P.O. BOX 824
48303 - 0824
PHONE: (248) 454-6300
FAX (1st. Floor): (248) 454-6312
FAX (2nd. Floor): (248) 338-2592
WEB SITE: http:// www.hrc-eng.com

FLINT WWTP
WASTE UNLOADING STATION

ELECTRICAL SITE PLAN

ISSUED FOR:	DATE:	BY:
BIDS	2023.06.24	TSW

JOB NO.
COF10601F

SHEET
E-101

PLOTTED 6/22/2023 6:22:58 PM

V:\2023\002\0230091\ER\revit\WU_HRC_E_R21.rvt

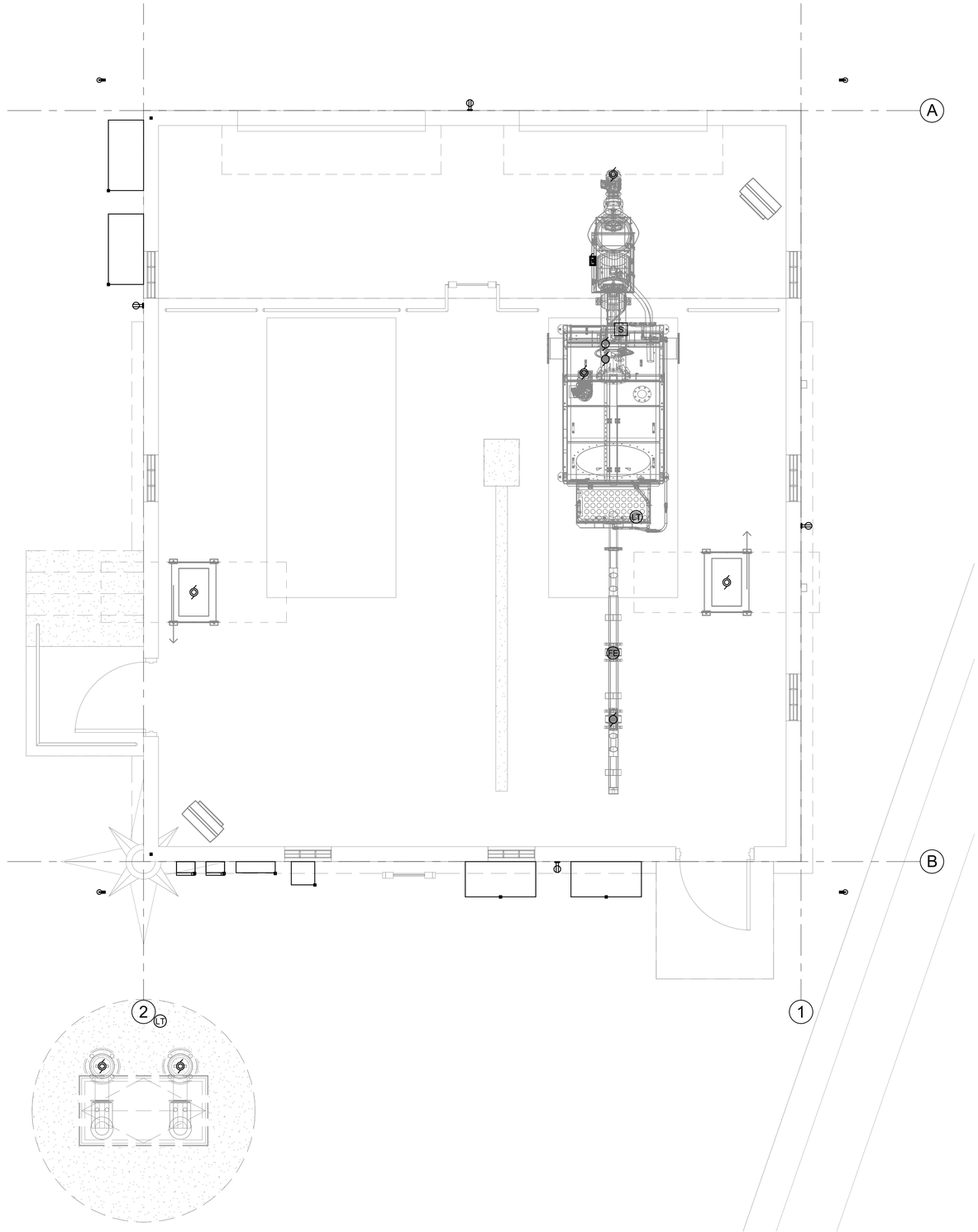

WASTE UNLOADING STATION ELECTRICAL GROUNDING PLAN

SCALE: 3/8" = 1'-0"

REV#	DATE	DESCRIPTION	BY

CITY of FLINT MICHIGAN

WADE TRIM
555 South Saginaw Street, Suite 201
Flint, MI 48502
810.235.2555 / 800.841.0342
FAX: 810.235.4975
www.wadetrim.com

HRC
HUBBELL, ROTH & CLARK, INC
CONSULTING ENGINEERS SINCE 1915
500 WILET DRIVE
BLOOMFIELD HILLS, MICH.
P.O. BOX 824
48303 - 0824
PHONE: (248) 454-6300
FAX (1st. Floor): (248) 454-6312
FAX (2nd. Floor): (248) 338-2592
WEB SITE: http:// www.hrc-engr.com

FLINT WWTP
WASTE UNLOADING STATION

WASTE UNLOADING STATION GROUNDING PLAN

ISSUED FOR:	DATE:	BY:
BIDS	2023.06.24	TSW

JOB NO. COF10601F

SHEET E-102

PLOTTED 6/22/2023 6:25:04 PM

V:\2023\00\2023009\1\E\Revit\WU_HRC_E_R21.rvt

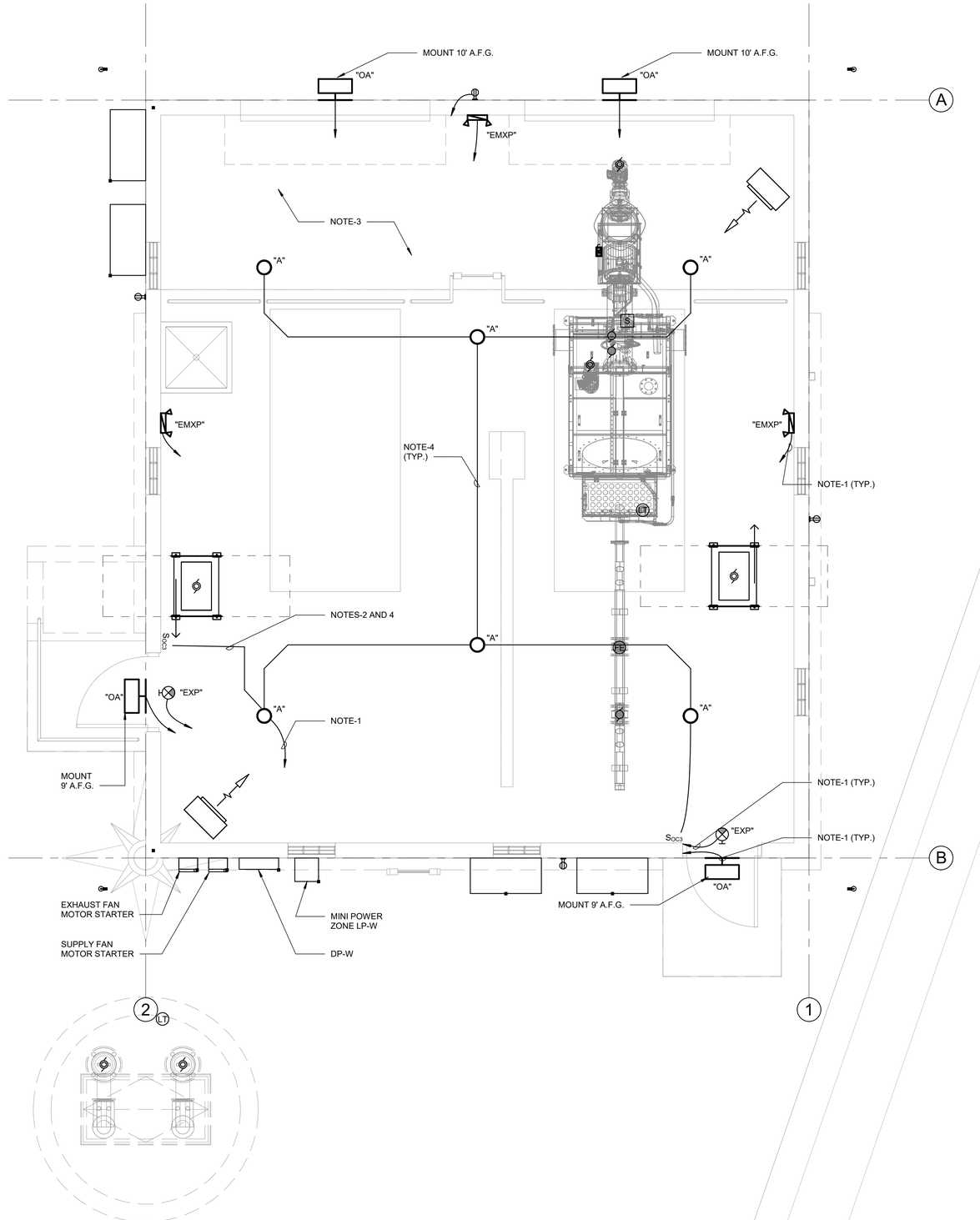

PLAN NOTES:

1. 2-#12 + #12, 3/4"C. TO LP-W.
2. INSTALL ADDITIONAL #12 WIRE FOR SWITCHES AS REQUIRED.
3. THIS AREA IS CLASS 1, DIV. 1, INSTALL CONDUIT, WIRE, AND EQUIPMENT TO MEET NEC REQUIREMENTS.
4. 2-#12 + 1-#12 GRD., 3/4"C.

WASTE UNLOADING STATION ELECTRICAL LIGHTING PLAN

SCALE: 3/8" = 1'-0"

REV#	DATE	DESCRIPTION	BY

WADE TRIM
555 South Saginaw Street, Suite 201
Flint, MI 48502
810.235.2555 / 800.841.0342
FAX: 810.235.4975
www.wadetrim.com

HRC
HUBBELL, ROTH & CLARK, INC
CONSULTING ENGINEERS SINCE 1915
555 HULET DRIVE
BLOOMFIELD HILLS, MICH.
P.O. BOX 824
48303 - 0824
PHONE: (248) 454-6300
FAX (1st. Floor): (248) 454-6312
FAX (2nd. Floor): (248) 338-2592
WEB SITE: http:// www.hrc-engr.com

FLINT WWTP
WASTE UNLOADING STATION

WASTE UNLOADING STATION LIGHTING PLAN

ISSUED FOR:	DATE:	BY:
BIDS	2023.06.24	TSW

JOB NO. COF10601F

SHEET E-103

PLOTTED 6/22/2023 6:26:56 PM

V:\2020\0\2020091\E\Revit\WU_HRC_E_R21.rvt

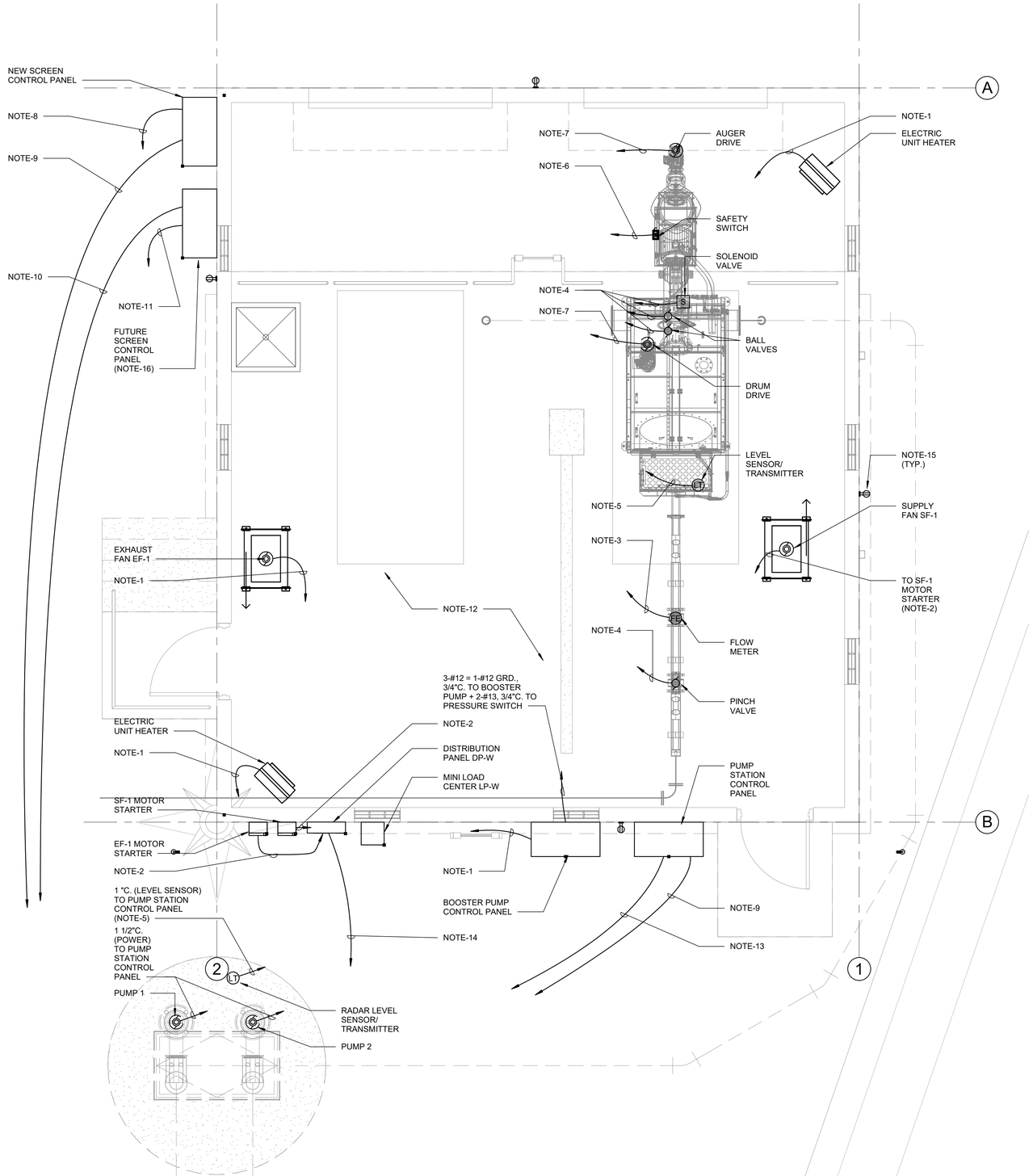

PLAN NOTES:

1. 3-#12 + 1-#12 GRD., 3/4"C. TO DP-W.
2. 3-#12 + 1-#12 GRD., 3/4"C.
3. 2PR-#18 SHLD., 3/4"C. TO SCREEN CONTROL PANEL.
4. 2-#12+ 1-#12 GRD., 3/4"C.TO SCREEN CONTROL PANEL.
5. 2PR-#18 SHLD., 3/4"C. (INTRINSICALLY SAFE) TO SCREEN CONTROL PANEL.
6. 2-#14, 3/4"C. TO SCREEN CONTROL PANEL.
7. 3-#12 + 1-#12 GRD., 3/4"C. TO SCREEN CONTROL PANEL.
8. 3-#12 + 1-#12 GRD., 1"C. TO DP-W.
9. 4-STRAND F.O. CABLE, 1 1/4"C. TO F.O. SWITCH IN NEW CONTROL PANEL LOCATED IN DIGESTER BUILDING.
10. 1 1/4"C. SPARE (EMPTY WITH PULL ROPE) TO CONTROL PANEL LOCATED IN DIGESTER BUILDING.
11. 1"C. SPARE (EMPTY WITH PULL ROPE) TO DP-W.
12. THIS AREA IS CLASS 1, DIV. 1, INSTALL CONDUIT, WIRE, AND EQUIPMENT TO MEET NEC REQUIREMENTS.
13. 3-#4 + 1-#8 GRD., 1"C. TO MCC IN DIGESTER BUILDING.
14. 3-#2 + 1-#8 GRD., 1 1/4"C. TO MCC IN DIGESTER BUILDING.
15. FURNISH AND INSTALL 2-#12 + 1-#12 GRD., 3/4"C. FROM RECEPTACLE TO LP-W.
16. FURNISH AND INSTALL 12" X 12" NEMA TYPE 3R PULL BOX FOR TEMPORARY CONNECTION OF CONDUITS.

WASTE UNLOADING STATION ELECTRICAL POWER PLAN

SCALE: 3/8" = 1'-0"

REV#	DATE	DESCRIPTION	BY

CITY of FLINT MICHIGAN

WADE TRIM
555 South Saginaw Street, Suite 201
Flint, MI 48502
810.235.2555 / 800.841.0342
FAX: 810.235.4975
www.wadetrim.com

HRC
HUBBELL, ROTH & CLARK, INC
CONSULTING ENGINEERS SINCE 1915
555 HULET DRIVE
BLOOMFIELD HILLS, MICH.
P.O. BOX 824
48303 - 0824
PHONE: (248) 454-6300
FAX (1st. Floor): (248) 454-6312
FAX (2nd. Floor): (248) 338-2592
WEB SITE: http:// www.hrc-engr.com

FLINT WWTP
WASTE UNLOADING STATION

WASTE UNLOADING STATION ELECTRICAL PLAN

ISSUED FOR:	DATE:	BY:
BIDS	2023.06.24	TSW

JOB NO. COF10601F

SHEET E-104

PLOTTED 6/22/2023 6:29:04 PM

V:\2023\0\2023091\Eng\Revit\WU_HRC_E_R21.rvt

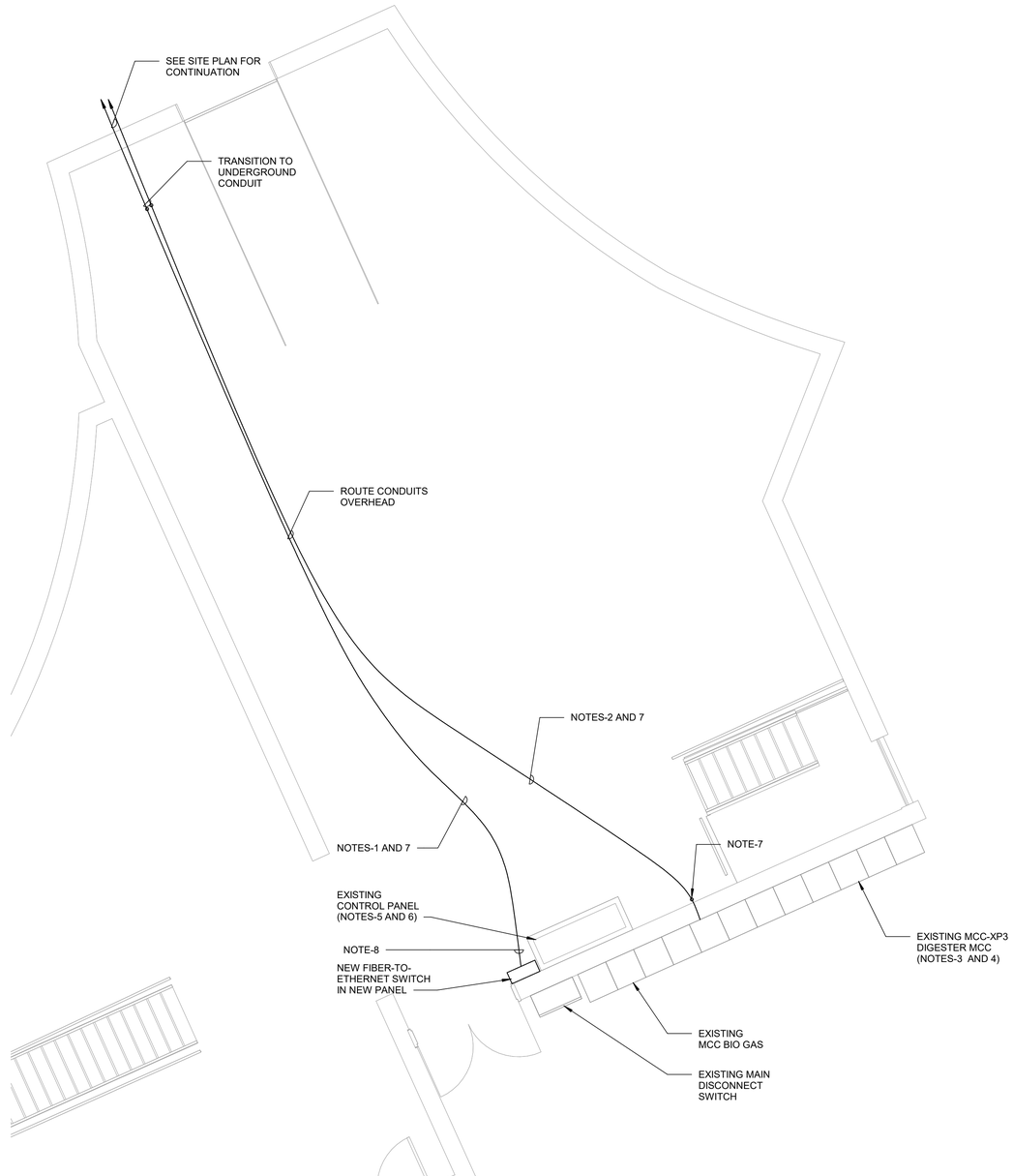

PARTIAL DIGESTER BUILDING ELECTRICAL PLAN

SCALE: 1/4" = 1'-0"

PLAN NOTES:

1. 2-1 1/4"C. WITH 4-STRAND FIBER OPTIC CABLE IN EACH + 1 -1 1/4"C. SPARE, EMPTY WITH PULL ROPE.
2. 3-#4 + 1-#8 GRD., 1"C. + 3-#1/0 + 1-#6 GRD., 1 1/2"C.
3. IN MCC-XP3, FURNISH AND INSTALL NEW MCC BUCKET WITH NEW 75A, 3-POLE CIRCUIT BREAKER TO FEED SUBMERSIBLE PUMP STATION.
4. IN MCC-XP3, FURNISH AND INSTALL NEW MCC BUCKET WITH NEW 150A, 3-POLE CIRCUIT BREAKER TO FEED DP-W.
5. CONNECT NEW FIBER OPTIC CABLES TO NEW FIBER OPTIC-TO-ETHERNET SWITCH IN NEW CONTROL PANEL.
6. IN EXISTING CONTROL PANEL REMOVE AND REPLACE EXISTING FIBER OPTIC-TO-ETHERNET SWITCH. NEW SWITCH TO HAVE 8-ETHERNET AND 8-FIBER OPTIC PORTS MINIMUM.
7. CORE THROUGH WALL FOR INSTALLATION OF NEW CONDUITS. SEAL AROUND CONDUITS WITH NON-METALLIC NON-SHRINK GROUT TO MATCH EXISTING.
8. CAT. 6 CABLE, 3/4"C. CONNECT NEW FIBER-TO-ETHERNET SWITCH TO EXISTING SWITCH.

REV#	DATE	DESCRIPTION	BY

WADE TRIM
555 South Saginaw Street, Suite 201
Flint, MI 48502
810.235.2555 / 800.841.0342
FAX: 810.235.4975
www.wadetrim.com

HRC
HUBBELL, ROTH & CLARK, INC
CONSULTING ENGINEERS SINCE 1915
555 HULET DRIVE, BLOOMFIELD HILLS, MICH. 48303 - 0824
P.O. BOX 824
PHONE: (248) 454-6300
FAX (1st. Floor): (248) 454-6312
FAX (2nd. Floor): (248) 338-2592
WEB SITE: http:// www.hrc-engr.com

FLINT WWTP
WASTE UNLOADING STATION

DIGESTER BUILDING ELECTRICAL PLAN

ISSUED FOR:	DATE:	BY:
BIDS	2023.06.24	TSW

JOB NO. COF10601F

SHEET E-105

PLOTTED 6/22/2023 6:29:08 PM

V:\2023\00\2023091\IER\Revit\WU_HRC_E_R21.rvt

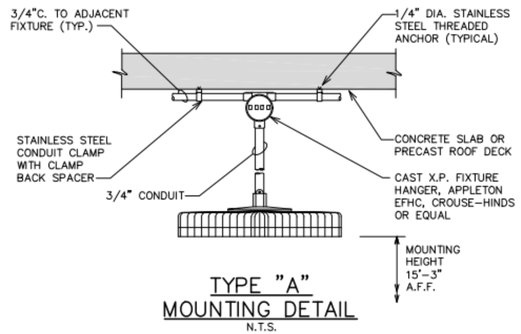

TYPE "A" MOUNTING DETAIL

N.T.S.

LIGHTING FIXTURE SCHEDULE

TYPE	LAMP	OPERATING VOLTAGE	DESCRIPTION	MFR. CAT. NO.
"A"	90 WATT LED 4,500K	120V.	INDUSTRIAL HGH BAY LED FIXTURE, CAST ALUMINUM, PENDANT MOUNTED RATED FOR HAZARDOUS AREA, CLASS 1, DIVISION 1 AND APPROVED BY INDEPENDENT TESTING AGENCY FOR THAT AREA	DIALIGHT-SAFESIGHT SERIES HEC: HEC-7MC2AD
"OA"	32 WATT LED 5000K	120V.	WALL MOUNTED OUTDOOR LED FIXTURE, DIE CAST ALUMINUM, CONSTANT VOLTAGE DRIVER, REMOVABLE HINGED DOOR FRAME WITH CAPTIVE FASTENERS. TYPE IV DISTRIBUTION, BRONZE POLYESTER POWDER COAT FINISH, UL LISTED FOR WET LOCATIONS, PHOTO CONTROL, IP66 RATED, WITH SURGE SUPPRESSION	HUBBELL: PGM3-180L-5K-035-U-DB-PC OR APPROVED EQUAL
"EXP"	LED	120V.	LED EXIT SIGN SUITABLE FOR USE IN CLASS 1, DIVISION 1, HAZARDOUS AREA WITH ALUMINUM BODY, ACRYLIC EDGE LIT SIGN, BATTERY BACKED WITH SELF DIAGNOSTICS	AZZ: XPEX-1-R-DT-WP-EM-SD OR APPROVED EQUAL
"EMXP"	LED	120V.	EMERGENCY LIGHTING UNIT WITH TWO (2) LED ADJUSTABLE HEADS SUITABLE FOR USE IN CLASS 1, DIVISION 1, HAZARDOUS AREA, WITH ALUMINUM BODY, STAINLESS STEEL HARDWIRE, SUITABLE FOR WET LOCATIONS	AZZ: XPEL-U-2-O-M OR APPROVED EQUAL

FIXTURE SCHEDULE NOTES:

✳ ALL LED FIXTURES MUST HAVE SURGE SUPPRESION

✳✳ IF CATALOG NUMBER DOES NOT MEET THE FOLLOWING CRITERIA, THE CONTRACTOR OR MFR. SHALL REVISE CATALOG NUMBER AS REQUIRED.

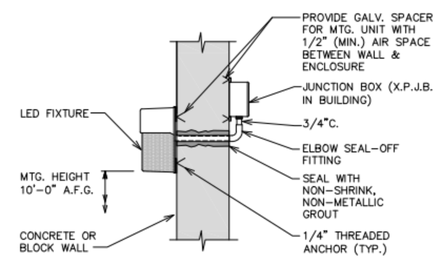

TYPE "OA" HAZARDOUS AREA MOUNTING DETAIL

N.T.S.

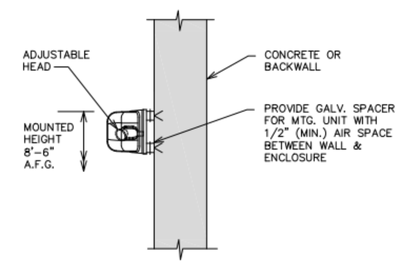

EMERGENCY LIGHTING FIXTURE TYPE "EMXP" MOUNTING DETAIL

N.T.S.

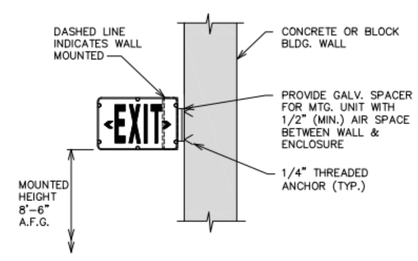

EXIT LTG. FIXTURE TYPE "EXP" MOUNTING DETAIL

N.T.S.

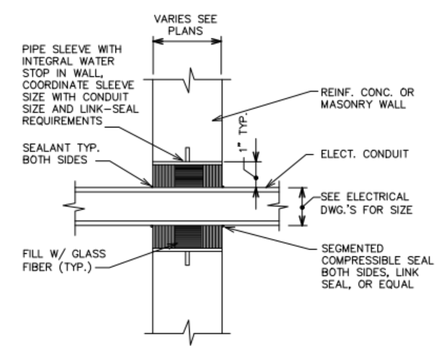

TYPICAL CONDUIT PENETRATION THRU NEW WALL ABOVE & BELOW GRADE

N.T.S.

REV#	DATE	DESCRIPTION	BY

CITY of FLINT MICHIGAN

WADE TRIM
555 South Saginaw Street, Suite 201
Flint, MI 48502
810.235.2555 / 800.841.0342
FAX: 810.235.4975
www.wadetrim.com

HRC
HUBBELL, ROTH & CLARK, INC
CONSULTING ENGINEERS SINCE 1915
555 HULET DRIVE, BLOOMFIELD HILLS, MICH. — P.O. BOX 824, 48303 - 0824
PHONE: (248) 454-6300
FAX (1st. Floor): (248) 454-6312
FAX (2nd. Floor): (248) 338-2592
WEB SITE: http:// www.hrc-engr.com

FLINT WWTP
WASTE UNLOADING STATION

LIGHTING DETAILS

ISSUED FOR:	DATE:	BY:
BIDS	2023.06.24	TSW

JOB NO. COF10601F

SHEET E-501

PLOTTED 6/22/2023 6:29:09 PM

V:\2023\00\2023091\IER\Revit\WU_HRC_E_R21.rvt

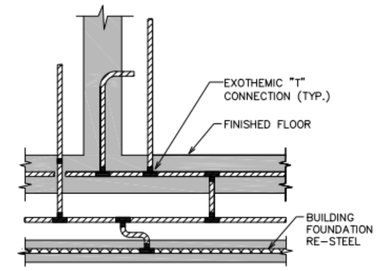

GROUND CONDUCTOR DETAIL
N.T.S.

NOTES:

A. ALL FLOOR OR WALL MOUNTED EQUIPMENT SUCH AS CONTROL PANELS, DISC. SWITCHES, LIGHTING PANELS, POWER DISTRIBUTION PANELS, AND LIGHTING TRANSFORMERS (INCLUDING PACKAGE EQUIPMENT FURNISHED AND INSTALLED BY OTHERS) SHALL HAVE A GROUND CONDUCTOR TIE BETWEEN THE EQUIPMENT AND THE GROUND MAT

B. MINIMUM GROUND CONDUCTOR SIZES:
#4/0-GROUND LOOP IN OR BELOW FLOOR SLAB AND ALL MAJOR RISERS
#2-480 VOLT EQUIPMENT
#6-120 VOLT EQUIPMENT

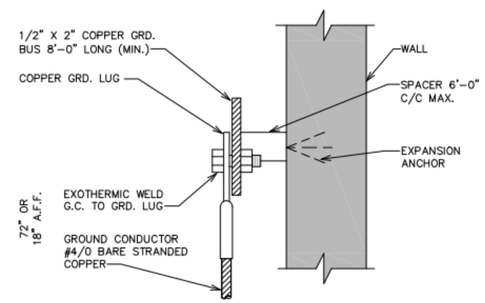

GROUND BUS DETAIL
N.T.S.

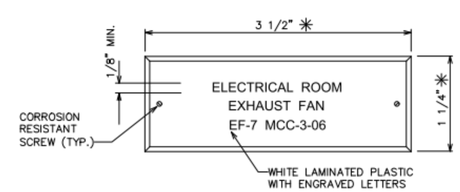

✳ SMALLER SIZES MAY BE USED INDICATED; SEE SPECIFICATIONS

NAMEPLATE DETAIL
FULL SCALE

REV#	DATE	DESCRIPTION	BY

CITY of FLINT MICHIGAN

WADE TRIM
555 South Saginaw Street, Suite 201
Flint, MI 48502
810.235.2555 / 800.841.0342
FAX: 810.235.4975
www.wadetrim.com

HRC
HUBBELL, ROTH & CLARK, INC
CONSULTING ENGINEERS SINCE 1915
555 HULET DRIVE, BLOOMFIELD HILLS, MICH. 48303 - 0824
P.O. BOX 824
PHONE: (248) 454-6300
FAX (1st. Floor): (248) 454-6312
FAX (2nd. Floor): (248) 338-2592
WEB SITE: http:// www.hrc-engr.com

FLINT WWTP
WASTE UNLOADING STATION

POWER DETAILS

ISSUED FOR:	DATE:	BY:
BIDS	2023.06.24	TSW

JOB NO. COF10601F

SHEET E-502

PLOTTED 6/22/2023 6:29:10 PM

V:\2023\2023\2023091\ER\revit\WU_HRC_E_R21.rvt

DP-W

Location:
Supply From:
Mounting: Surface
Enclosure: Type 3R
Notes:

Volts: 480V
Phases: 3
Wires: 3

A.I.C. Rating:
Mains Type:
Mains Rating: 125 A
MCB Rating: 125 A

CKT	Circuit Description	Trip	P	Wire Size	A		B		C		Wire Size	P	Trip	Circuit Description	CKT
1	RECEIVING SCREEN CONTROL PANEL	20 A	3	3-#12, 1-#12, 1-#12	1.16	3.35					3-#12, 1-#12, 1-#12	3	20 A	ELECTRIC UNIT HEATER EUH-1	2
3							1.16	3.35							4
5									1.16	3.35					6
7	SF-1 MOTOR STARTER	20 A	3	3-#12, 1-#12, 1-#12	0.00	3.35					3-#12, 1-#12, 1-#12	3	20 A	ELECTRIC UNIT HEATER EUH-2	8
9							0.00	3.35							10
11									0.00	3.35					12
13	EF-1 MOTOR STARTER	20 A	3	3-#12, 1-#12, 1-#12	0.00	0.75					2-#12, 1-#12, 1-#12	2	20 A	MINI LOAD CENTER LP-W	14
15							0.00	0.63							16
17	PUMP STATION CONTROL PANEL	20 A	3	3-#12, 1-#12, 1-#12					0.00	0.00	3-#12, 1-#12, 1-#12	3	20 A	FUTURE SCREEN CONTROL PANEL	18
19					0.00	0.00									20
21							0.00	0.00							22
23									0.00	1.16	3-#12, 1-#12, 1-#12	3	20 A	WATER BOOSTER PUMP CONTROL PANEL	24
25	Spare	20 A	3	--	0.00	1.16									26
27							0.00	1.16							28
29									0.00	0.00	--	3	20 A	Spare	30
31	Spare	20 A	3	--	0.00	0.00									32
33							0.00	0.00							34
35									0.00	--	--	1	--	Space	36
37	Space	--	1	--	--	--					--	1	--	Space	38
39	Space	--	1	--			--	--			--	1	--	Space	40
41	Space	--	1	--					--	--	--	1	--	Space	42
		Total Load:			9.38 kVA		9.27 kVA		8.68 kVA						
		Total Amps:			34 A		34 A		31 A						

Load Classification	Connected Load	Demand Factor	Estimated Demand	Panel Totals	
Heating	20100 VA	100.00%	20100 VA		
Lighting	6 VA	100.00%	6 VA	**Total Conn. Load:**	27325 VA
Lighting - Dwelling Unit	300 VA	100.00%	300 VA	**Total Est. Demand:**	27785 VA
Lighting - Exterior	280 VA	125.00%	350 VA	**Total Conn.:**	33 A
Motor	6982 VA	106.25%	7419 VA	**Total Est. Demand:**	33 A
Other	90 VA	100.00%	90 VA		
Power	720 VA	100.00%	720 VA		

LP-W

Location:
Supply From: DP-W
Mounting: Surface
Enclosure: Type 3R
Notes:

Volts: 208V/120V Single
Phases: 1
Wires: 3

A.I.C. Rating:
Mains Type: MCB
Mains Rating: 50 A
MCB Rating: 50 A

CKT	Circuit Description	Trip	P	Wire Size	A		B		Wire Size	P	Trip	Circuit Description	CKT
1	LIGHTS - INTERIOR	20 A	1	1-#12, 1-#12, 1-#12	0.09	0.31			1-#12, 1-#12, 1-#12	1	20 A	EXIT AND EMERG. LGTS	2
3	LIGHTS - EXTERIOR	20 A	1	1-#12, 1-#12, 1-#12			0.28	0.36	1-#12, 1-#12, 1-#12	1	20 A	RECEPTACLES - S& W...	4
5	RECEPTACLES - N & E...	20 A	1	1-#12, 1-#12, 1-#12	0.36	0.00			--	1	20 A	Spare	6
7	Spare	20 A	1	--			0.00	0.00	--	1	20 A	Spare	8
9	Spare	20 A	1	--	0.00	0.00			--	1	20 A	Spare	10
11	Space	--	1	--			--	--	--	1	--	Space	12
13	Space	--	1	--	--	--			--	1	--	Space	14
15	Space	--	1	--			--	--	--	1	--	Space	16
17	Space	--	1	--	--	--			--	1	--	Space	18
19	Space	--	1	--			--	--	--	1	--	Space	20
21	Space	--	1	--	--	--			--	1	--	Space	22
23	Space	--	1	--			--	--	--	1	--	Space	24
25	Space	--	1	--	--	--			--	1	--	Space	26
27	Space	--	1	--			--	--	--	1	--	Space	28
29	Space	--	1	--	--	--			--	1	--	Space	30
31	Space	--	1	--			--	--	--	1	--	Space	32
33	Space	--	1	--	--	--			--	1	--	Space	34
35	Space	--	1	--			--	--	--	1	--	Space	36
37	Space	--	1	--	--	--			--	1	--	Space	38
39	Space	--	1	--			--	--	--	1	--	Space	40
41	Space	--	1	--	--	--			--	1	--	Space	42
		Total Load:			0.75 kVA		0.63 kVA						
		Total Amps:			7 A		6 A						

Load Classification	Connected Load	Demand Factor	Estimated Demand	Panel Totals	
Lighting	6 VA	100.00%	6 VA		
Lighting - Dwelling Unit	300 VA	100.00%	300 VA	**Total Conn. Load:**	1379 VA
Lighting - Exterior	280 VA	125.00%	350 VA	**Total Est. Demand:**	1448 VA
Other	90 VA	100.00%	90 VA	**Total Conn.:**	7 A
Power	720 VA	100.00%	720 VA	**Total Est. Demand:**	7 A

REV#	DATE	DESCRIPTION	BY

WADE TRIM
555 South Saginaw Street, Suite 201
Flint, MI 48502
810.235.2555 / 800.841.0342
FAX: 810.235.4975
www.wadetrim.com

HRC
HUBBELL, ROTH & CLARK, INC
CONSULTING ENGINEERS SINCE 1915
555 HULET DRIVE
BLOOMFIELD HILLS, MICH.
P.O. BOX 824
48303 - 0824
PHONE: (248) 454-6300
FAX (1st. Floor): (248) 454-6312
FAX (2nd. Floor): (248) 338-2592
WEB SITE: http:// www.hrc-engr.com

FLINT WWTP
WASTE UNLOADING STATION

PANEL SCHEDULES

ISSUED FOR:	DATE:	BY:
BIDS	2023.06.24	TSW

JOB NO. COF10601F

SHEET
E-601

PLOTTED 6/22/2023 6:39:14 PM

V:\2023\0\2023091\ER\rvt\WU_HRC_E_R21.rvt

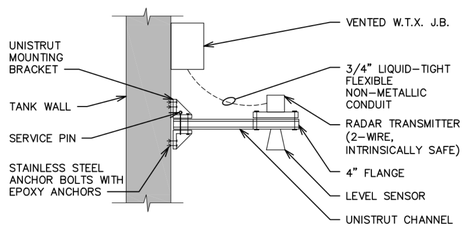

TYPICAL RADAR LEVEL SENSOR/ TRANSMITTER MOUNTING DETAIL

N.T.S.

NOTE: ALL UNISTRUT AND HARDWARE SHALL BE 316 S.S.

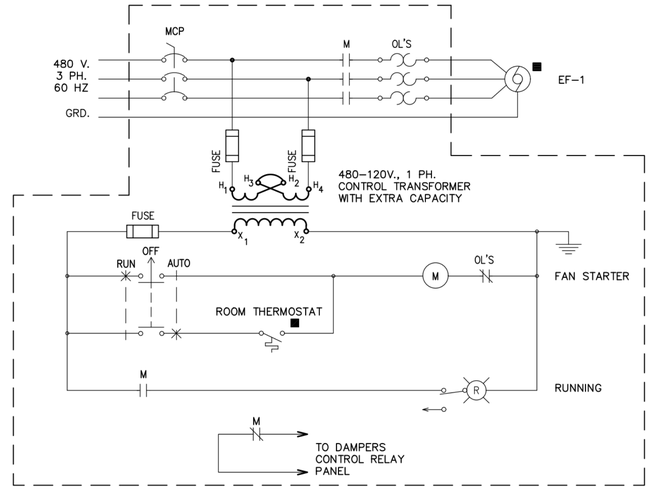

EXHAUST FAN EF-1

SUPPLY FAN SF-1 SIMILAR

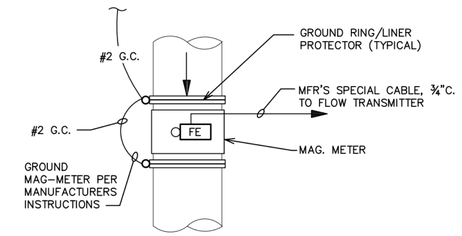

TYPICAL MAGNETIC FLOW METER INSTALLATION DETAIL

N.T.S.

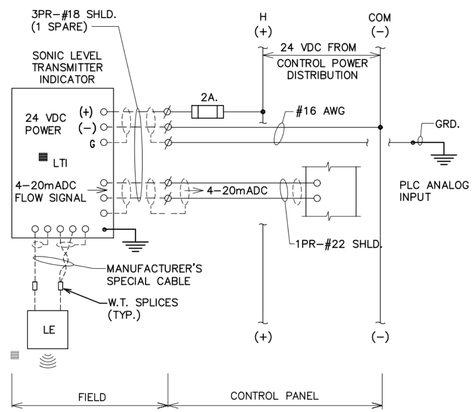

RADAR LEVEL TRANSMITTER TYPICAL WIRING DIAGRAM

NO SCALE

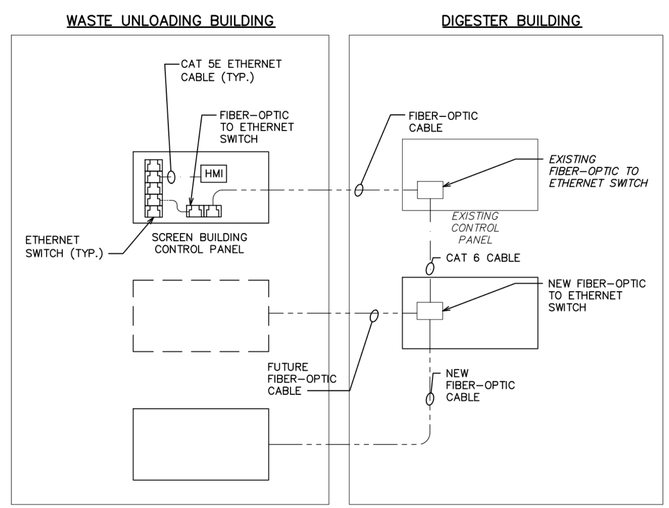

COMMUNICATIONS RISER DIAGRAM

NO SCALE

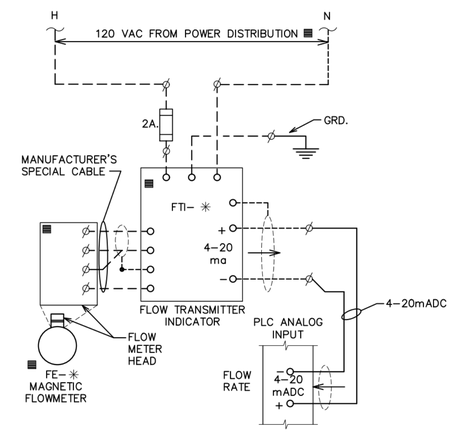

MAGNETIC FLOWMETER WIRING DIAGRAM (TYPICAL)

ALL DEVICES LOCATED IN CONTROL PANEL UNLESS OTHERWISE INDICATED BY ■

(MAGNETIC FLOWMETERS INSTALLED BELOW GRADE SHALL HAVE POTTED/SEALED HEADS, AND BE RATED SUITABLE FOR OCCASIONAL SUBMERGENCE; AS NOTED ON THE DRAWINGS)

REV#	DATE	DESCRIPTION	BY

CITY of FLINT MICHIGAN

WADE TRIM
555 South Saginaw Street, Suite 201
Flint, MI 48502
810.235.2555 / 800.841.0342
FAX: 810.235.4975
www.wadetrim.com

HRC
HUBBELL, ROTH & CLARK, INC
CONSULTING ENGINEERS SINCE 1915
555 HULET DRIVE, BLOOMFIELD HILLS, MICH. — P.O. BOX 824, 48303 - 0824
PHONE: (248) 454-6300
FAX (1st. Floor): (248) 454-6312
FAX (2nd. Floor): (248) 338-2592
WEB SITE: http:// www.hrc-engr.com

FLINT WWTP
WASTE UNLOADING STATION

POWER WIRING DIAGRAMS

ISSUED FOR:	DATE:	BY:
BIDS	2023.06.24	TSW

JOB NO. COF10601F

SHEET E-602

PLOTTED 6/22/2023 6:29:15 PM

V:\2023\00\2023091\E\Revit\WU_HRC_E_R21.rvt