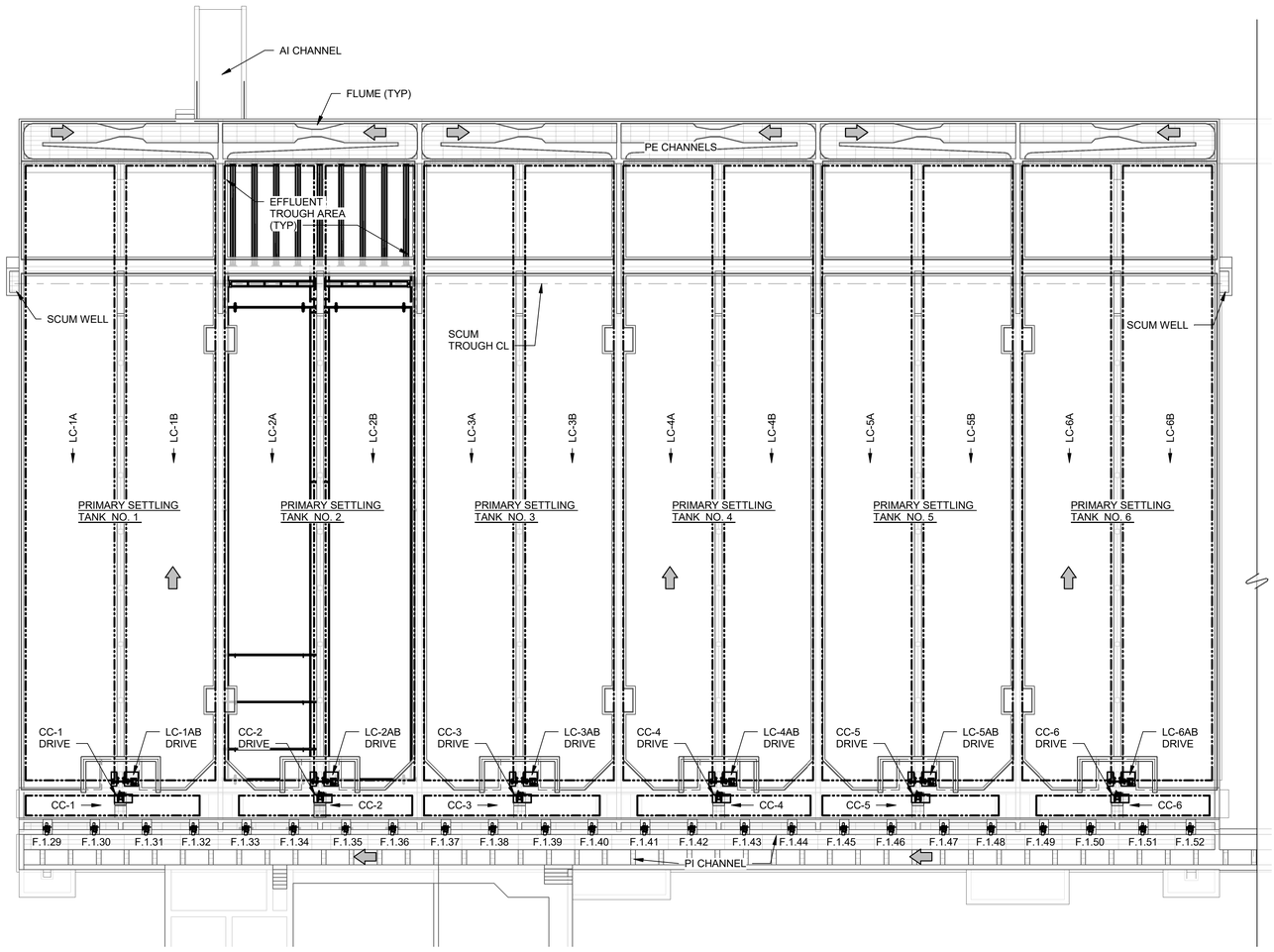

PRIMARY TANKS BATT. A OVERALL TOP PLAN

SCALE: 1/16" = 1'-0"

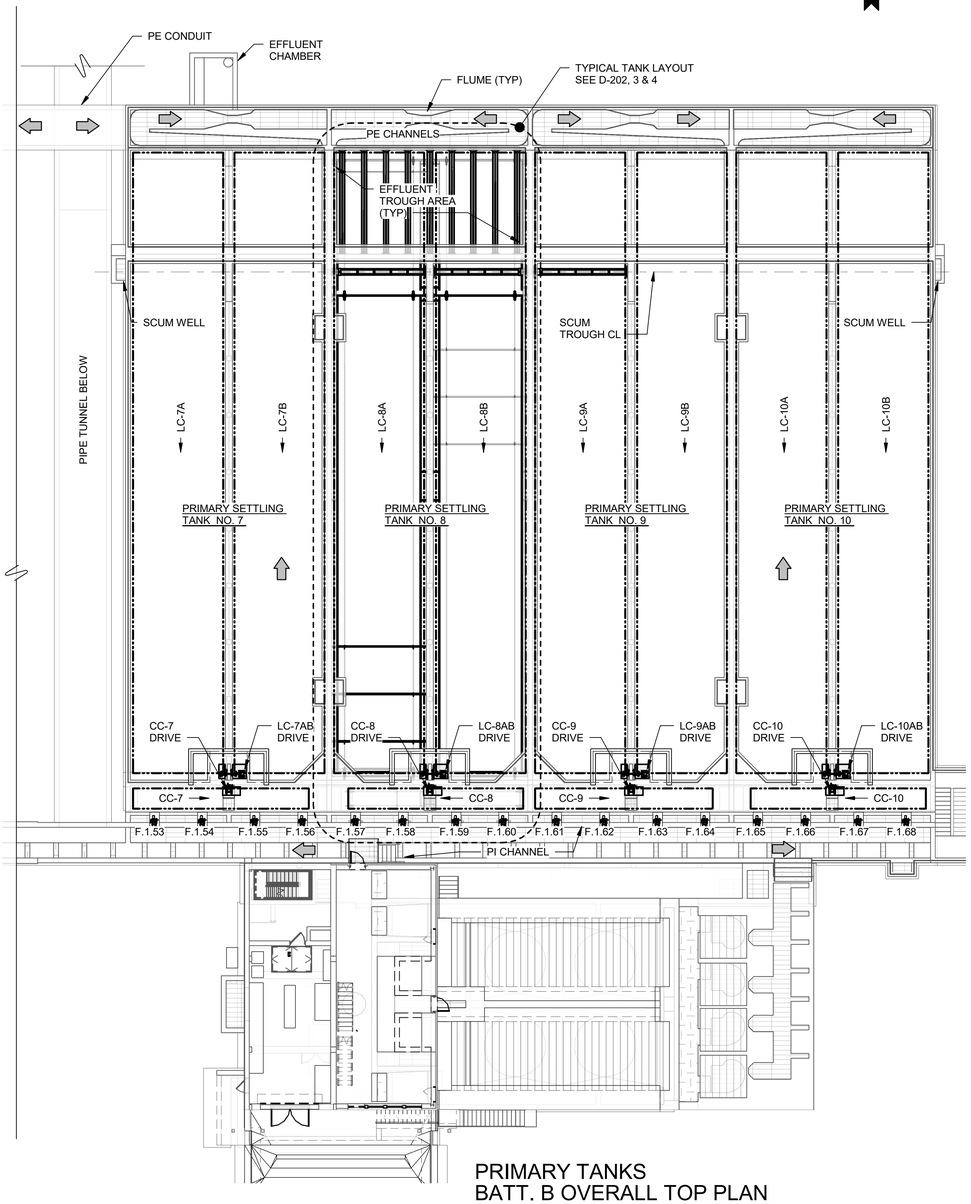

PRIMARY TANKS BATT. B OVERALL TOP PLAN

SCALE: 1/16" = 1'-0"

NOTES:
1. IN EACH OF THE 10 PRIMARY SETTLING TANKS REPLACE THE RETANGULAR COLLECTOR MECHANISMS, EFFLUENT TROUGHS AND INFLUENT GATES.

TETRA TECH
www.tetratech.com
3497 COOLIDGE ROAD
EAST LANSING, MI 48823
TEL: (517) 316-3930 FAX: (517) 484-8140

MARK	DATE	DESCRIPTION	BY
1	6/22/21	ISSUED FOR BIDS	

CITY OF FLINT, MICHIGAN

NORTHWEST WATER RECLAMATION FACILITY IMPROVEMENTS PROJECT

PRIMARY TANKS OVERALL TOP PLAN

PROJ:	200-156238-21001
DESN:	RGK
DRWN:	RGK
CHKD:	MAT

D-201

Copyright: Tetra Tech

6/21/2021 10:11:46 AM BIM 360://200-156238-21001 Flint WWTP Grid\D-156238-21001 PRIMARY TKS.rvt

Bar measures 1 inch, otherwise drawing is not to scale

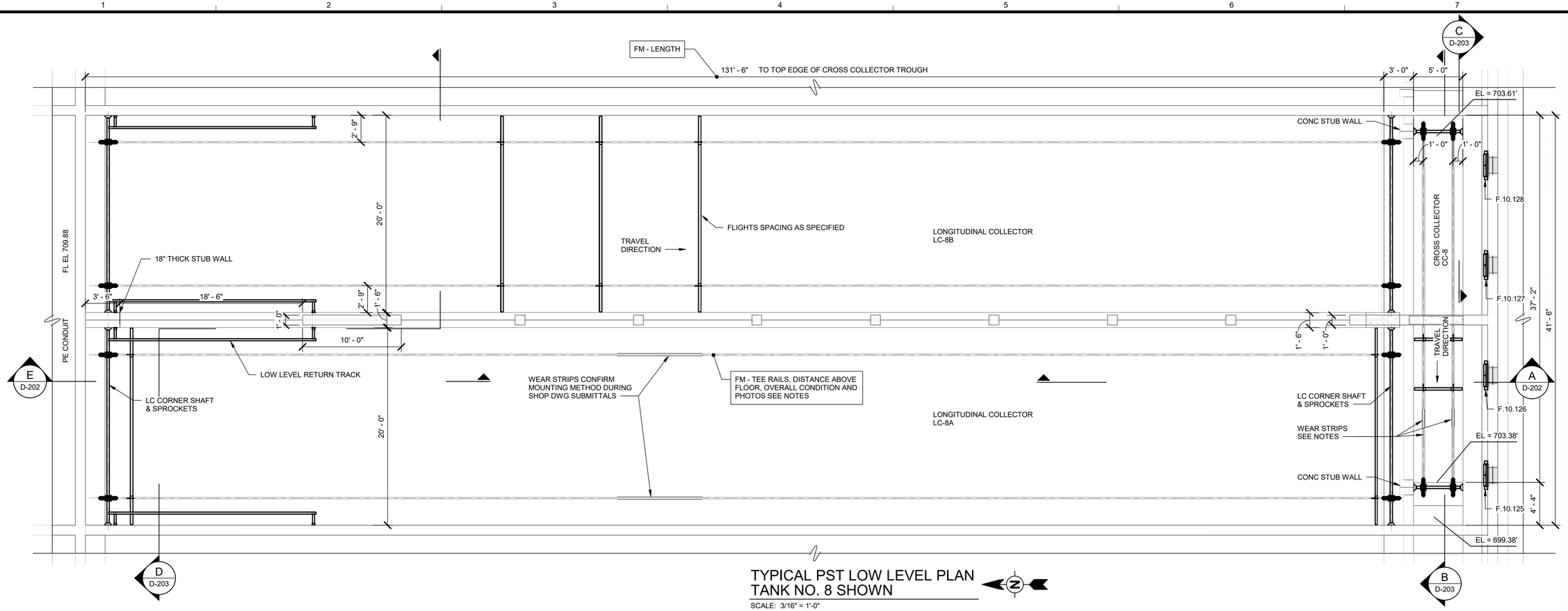

TYPICAL PST LOW LEVEL PLAN
TANK NO. 8 SHOWN

SCALE: 3/16" = 1'-0"

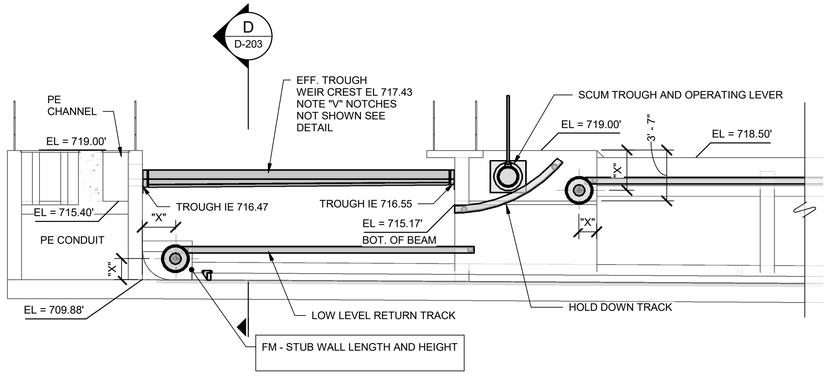

E D-202 PARTIAL SECTION EFFLUENT END

SCALE: 3/16" = 1'-0"

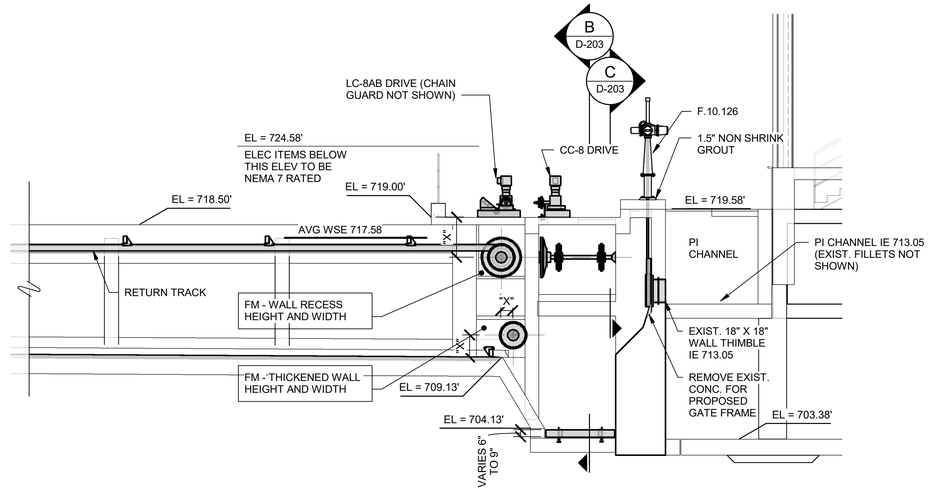

A D-202 PARTIAL SECTION INFLUENT END

SCALE: 3/16" = 1'-0"

NOTES TYPICAL ALL PST'S:

1. CONTRACTOR TO CONFIRM TANK DIMENSIONS PRIOR TO SHOP DRAWING SUBMITTALS. SEE SECTION 01110 FOR PROCEDURES. PAY SPECIAL ATTENTION TO ITEMS IDENTIFIED AS FM - NOTES THESE ITEMS MAY NOT MATCH RECORD INFORMATION AND NEED TO BE CHECKED.
2. RECORD INFORMATION INDICATES THE 25 LB TEE RAILS WERE EMBEDDED WITH THE CROWN 0.25" ABOVE THE FLOOR. PROPOSED WEAR STRIPS ARE TO BE PLUG WELDED TO TEE RAILS. FOR BIDDING PURPOSES CONTRACTOR SHALL ASSUME RAILS STILL PROJECT ABOVE THE FLOOR AND A PORTION OF THE RAIL'S CROWN WILL NEED TO BE REMOVED BY GRINDING TO PROVIDE A 1" WIDE FLAT SURFACE TO RECEIVE WEAR STRIPS. IF FIELD INSPECTION DETERMINES RAILS HAVE FLAT TOPS ALREADY (DUE TO WEAR) GRINDING WILL NOT BE REQUIRED. FOR BIDDING PURPOSES CONTRACTOR SHALL ASSUME EACH TEE RAIL WILL REQUIRE GRINDING.
3. WEAR STRIPS SHALL BE ATTACHED DIRECTLY TO THE TANK FLOOR IF IT IS DETERMINED DURING TANK INSPECTIONS THE EXISTING TEE RAILS ARE CORRODED OR FOR OTHER REASON ARE NOT SUITABLE FOR WELDING. CONTRACTOR TO COORDINATE MOUNTING DETAILS DURING SHOP DRAWING SUBMITTALS.
4. NEW MECHANISM COMPONENTS THAT ARE MOUNTED IN SAME LOCATION OR WITHIN CLOSE PROXIMITY OF EXISTING COMPONENTS MAY REQUIRE MOUNTING PLATES TO BE ROTATED (WHERE PRACTICAL) TO POSITION BOLT PATTERN OVER SOLID CONCRETE.

4' 0' 4' 8' 12'

SCALE: 3/16" = 1'-0"

TETRA TECH
www.tetratech.com
3497 COOLIDGE ROAD
EAST LANSING, MI 48823
TEL: (517) 316-3930 FAX: (517) 484-8140

MARK	DATE	DESCRIPTION	BY
1	6/22/21	ISSUED FOR BIDS	

CITY OF FLINT, MICHIGAN

NORTHWEST WATER RECLAMATION
FACILITY IMPROVEMENTS PROJECT

PRIMARY SETTLING TANK
TYPICAL LOW LEVEL PLAN & SECTIONS

PROJ:	200-156238-21001
DESN:	RGK
DRWN:	RGK
CHKD:	MAT

D-202

Copyright: Tetra Tech

6/21/2021 10:12:03 AM BIM 360://200-156238-21001 Flint WWTP Grit/D-156238-21001 PRIMARY TKS.rvt

Bar measures 1 inch, otherwise drawing is not to scale

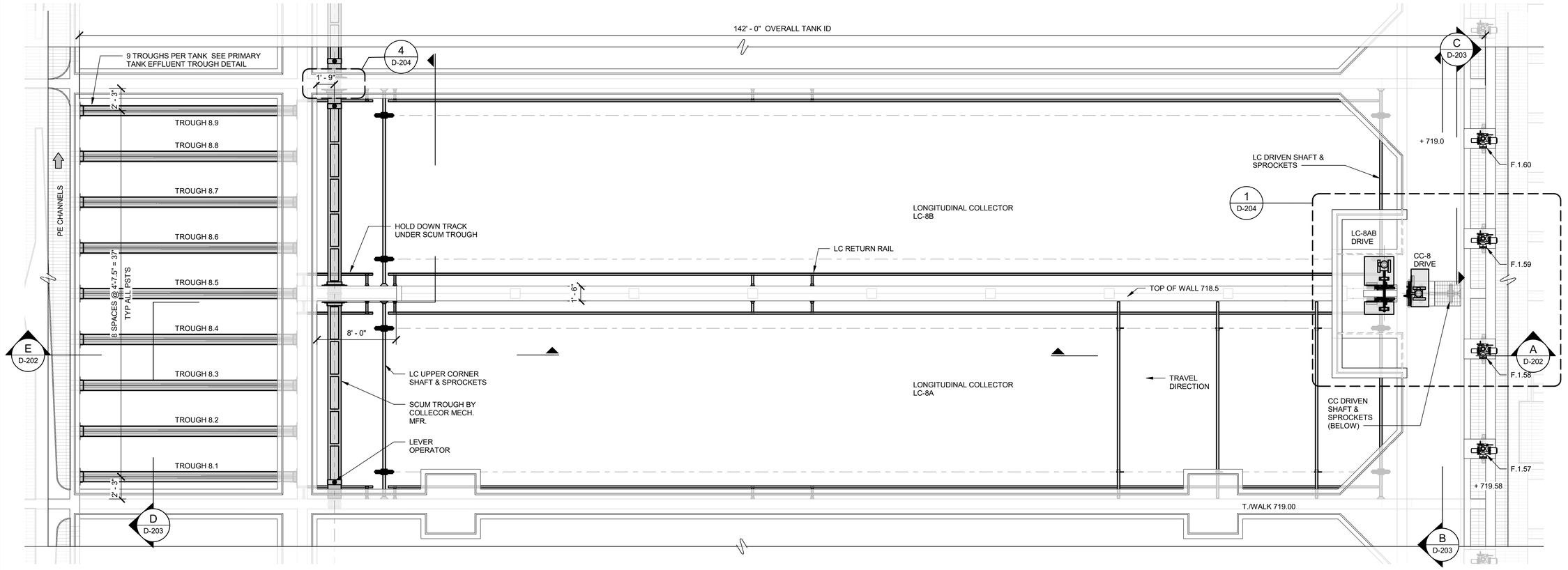

TYPICAL PST HIGH LEVEL PLAN
TANK NO. 8 SHOWN

SCALE: 3/16" = 1'-0"

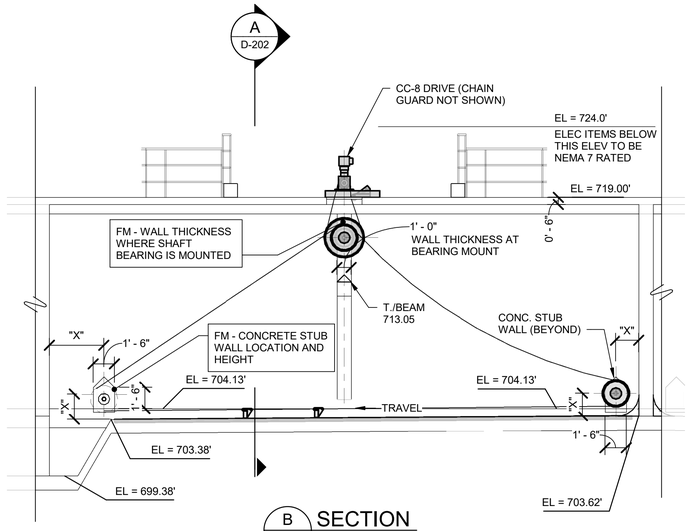

B SECTION
D-202 SCALE: 3/16" = 1'-0"

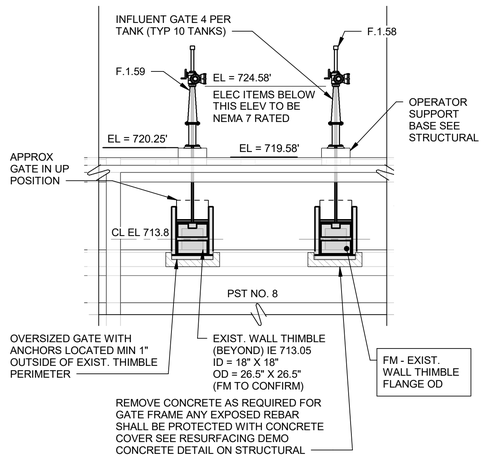

C SECTION
D-202 SCALE: 3/16" = 1'-0"

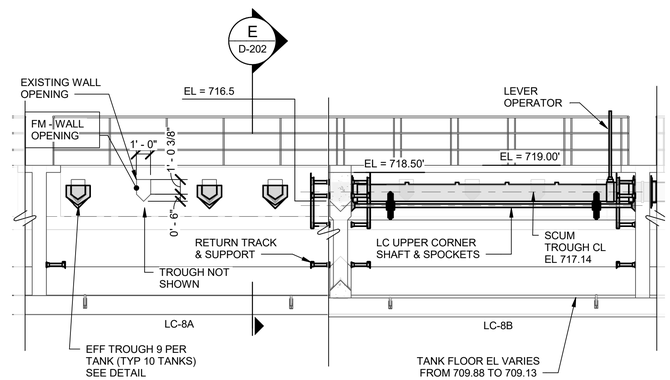

D SECTION
D-202 SCALE: 3/16" = 1'-0"

4' 0' 4' 8' 12'
SCALE: 3/16" = 1'-0"

TETRA TECH
www.tetratech.com
3497 COOLIDGE ROAD
EAST LANSING, MI 48823
TEL: (517) 316-3930 FAX: (517) 484-8140

MARK	DATE	DESCRIPTION
1	6/22/21	ISSUED FOR BIDS

BY

CITY OF FLINT, MICHIGAN

NORTHWEST WATER RECLAMATION FACILITY IMPROVEMENTS PROJECT

PRIMARY SETTLING TANK TYPICAL HIGH LEVEL PLAN & SECTIONS

PROJ:	200-156238-21001
DESN:	RGK
DRWN:	RGK
CHKD:	MAT

D-203

Copyright: Tetra Tech

6/21/2021 10:12:19 AM BIM 360://200-156238-21001 Flint WWTP Grid/D-156238-21001 PRIMARY TKS.rvt

Bar measures 1 inch, otherwise drawing is not to scale

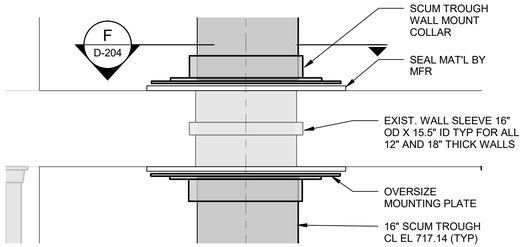

SCUM TROUGH WALL CONNECTION PLAN

4 D-203 SCALE: 1" = 1'-0"

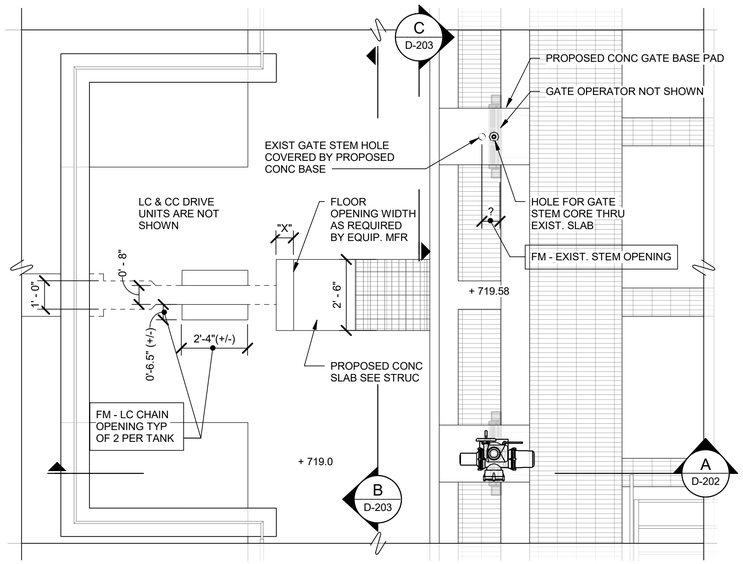

NOTES:
1. CONTRACTOR MAY NEED TO ENLARGE THE FLOOR CHAIN OPENINGS TO ACCOMMODATE THE PROPOSED MECHANISM DRIVE AND CHAIN ARRANGEMENT.
2. FOR BIDDING ASSUME EACH LONGITUDINAL COLLECTOR'S FLOOR OPENING WILL NEED THE WIDTH INCREASED 2" AND THE LENGTH 6". ANY EXPOSED REBAR RESULTING FROM SAW CUTTING SHALL BE PROTECTED WITH CONCRETE COVER SEE RESURFACING DEMO CONCRETE DETAIL ON STRUCTURAL.

DRIVE AND INFLUENT GATE FLOOR OPENING PLAN

1 D-203 SCALE: 3/8" = 1'-0"

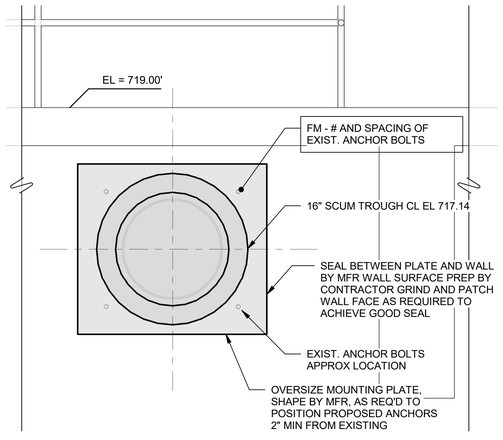

SECTION

F D-204 SCALE: 1" = 1'-0"

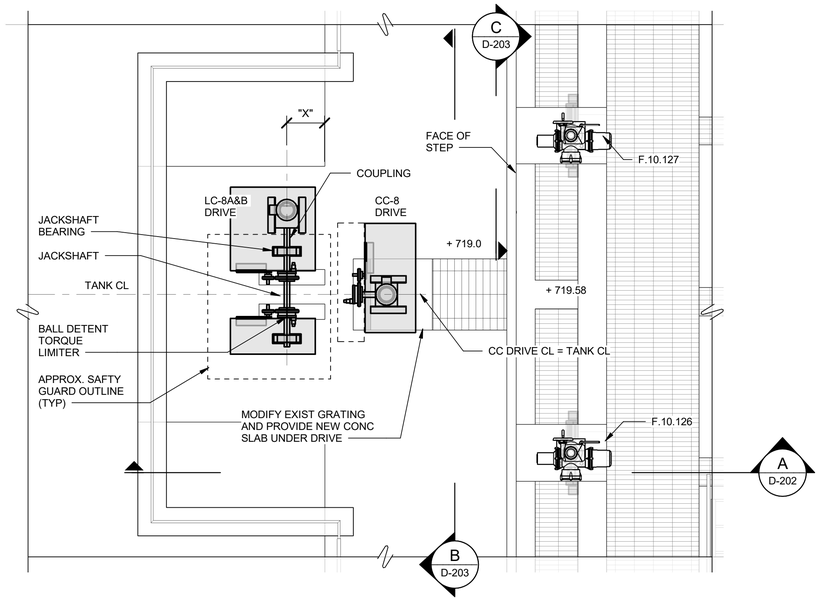

DRIVE AND INFLUENT GATE ENLARGED EQUIPMENT PLAN

SCALE: 3/8" = 1'-0"

1' 0' 1' 2'
SCALE: 1" = 1'-0"
2' 0' 2' 4' 6'
SCALE: 3/8" = 1'-0"

TETRA TECH
www.tetratech.com
3497 COOLIDGE ROAD
EAST LANSING, MI 48823
TEL: (517) 316-3930 FAX: (517) 484-8140

MARK	DATE	DESCRIPTION	BY
1	6/22/21	ISSUED FOR BIDS	

CITY OF FLINT, MICHIGAN
NORTHWEST WATER RECLAMATION FACILITY IMPROVEMENTS PROJECT

ENLARGED PLANS AND SECTION

PROJ:	200-156238-21001
DESN:	RGK
DRWN:	RGK
CHKD:	MAT

D-204

Copyright: Tetra Tech

6/21/2021 10:12:33 AM BIM 360://200-156238-21001 Flint WWTP Grit/D-156238-21001 PRIMARY TKS.rvt

Bar measures 1 inch, otherwise drawing is not to scale

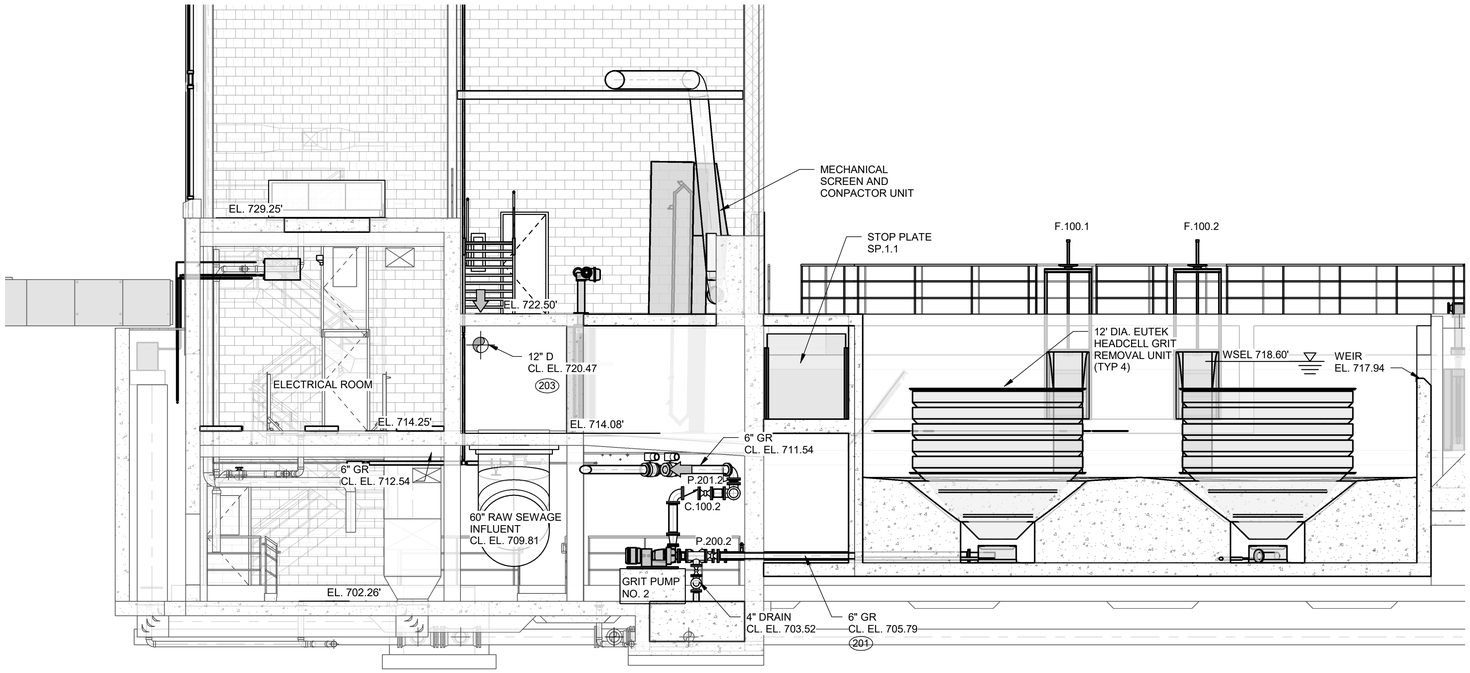

A SECTION
D-101 SCALE: 3/16" = 1'-0"

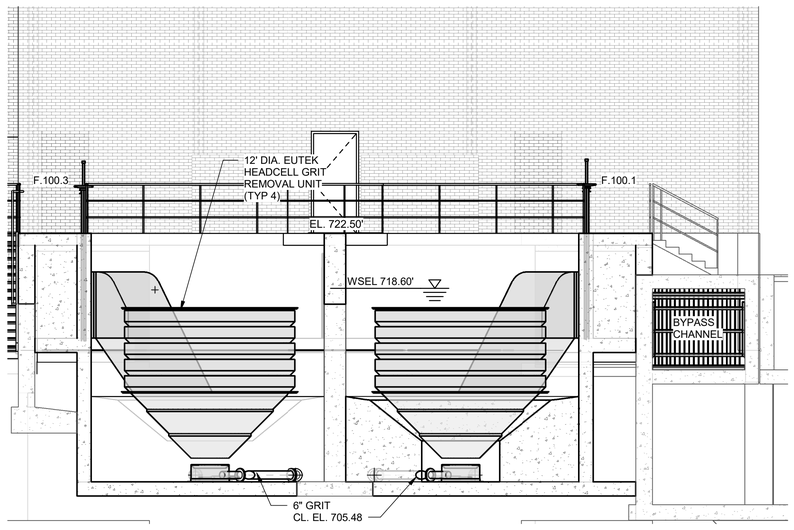

B SECTION
D-101 SCALE: 3/16" = 1'-0"

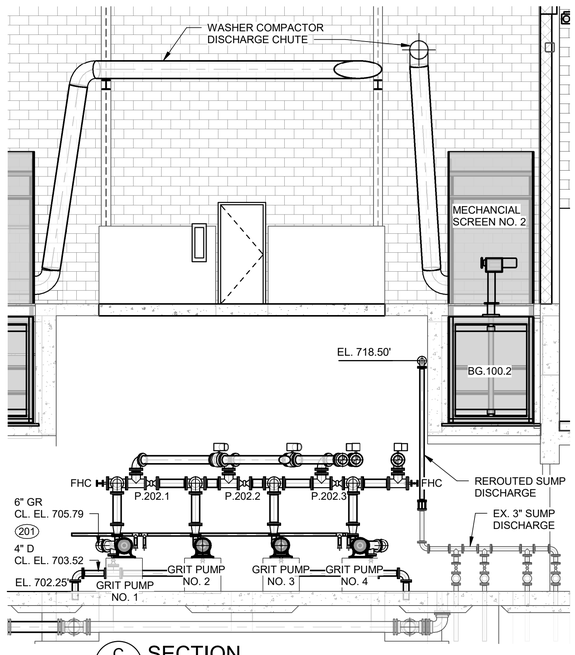

C SECTION
D-102 SCALE: 3/16" = 1'-0"

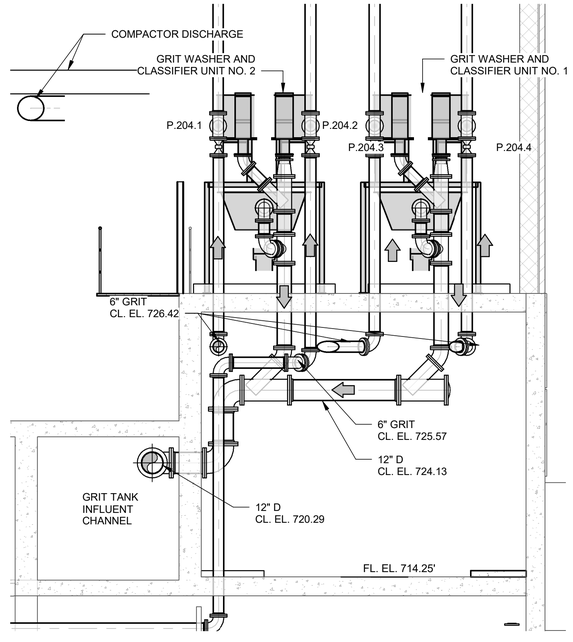

D SECTION
D-104 SCALE: 1/4" = 1'-0"

4' 0' 4' 8' 12'
SCALE: 3/16" = 1'-0"

Bar measures 1 inch, otherwise drawing is not to scale

TETRA TECH
ENGINEERING BUSINESS NO. 2429
www.tetratech.com
3497 COOLIDGE ROAD
EAST LANSING, MI. 48823
TEL: (517)316.3963 FAX: (517)484.8140

MARK	DATE	DESCRIPTION	BY
1	6/22/21	ISSUED FOR BIDS	

CITY OF FLINT, MICHIGAN

FLINT WPC GRIT BAT "B" SYSTEM & PRIMARY TANKS IMPROVMENTS

SECTIONS

PROJ:	200-156238-21001
DESN:	BGB
DRWN:	TJL
CHKD:	MAT

D-301

Copyright: Tetra Tech

6/22/2021 6:29:21 AM BIM 360://200-156238-21001 Flint WWTP Grit/D-156238-21001 BATT B GRIT.rvt

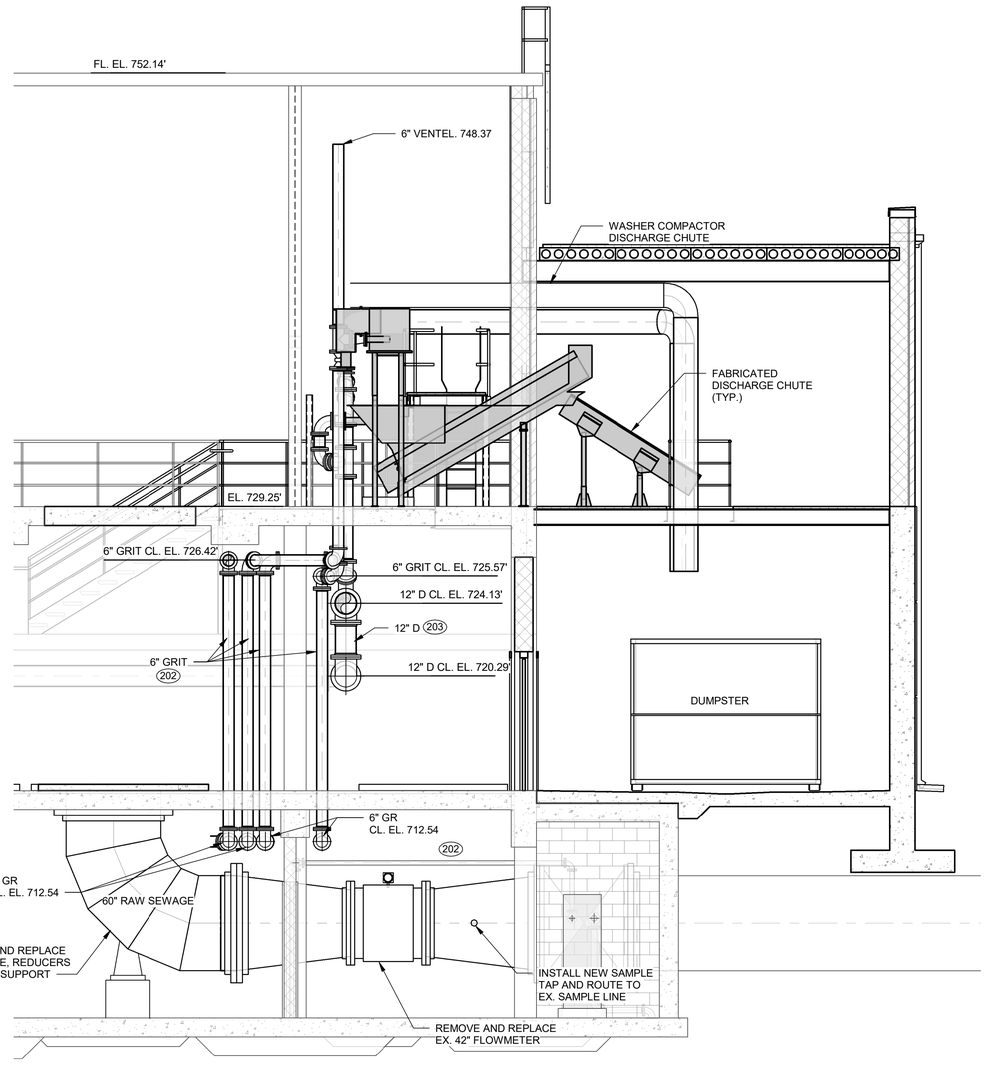

E SECTION
D-101 SCALE: 1/4" = 1'-0"

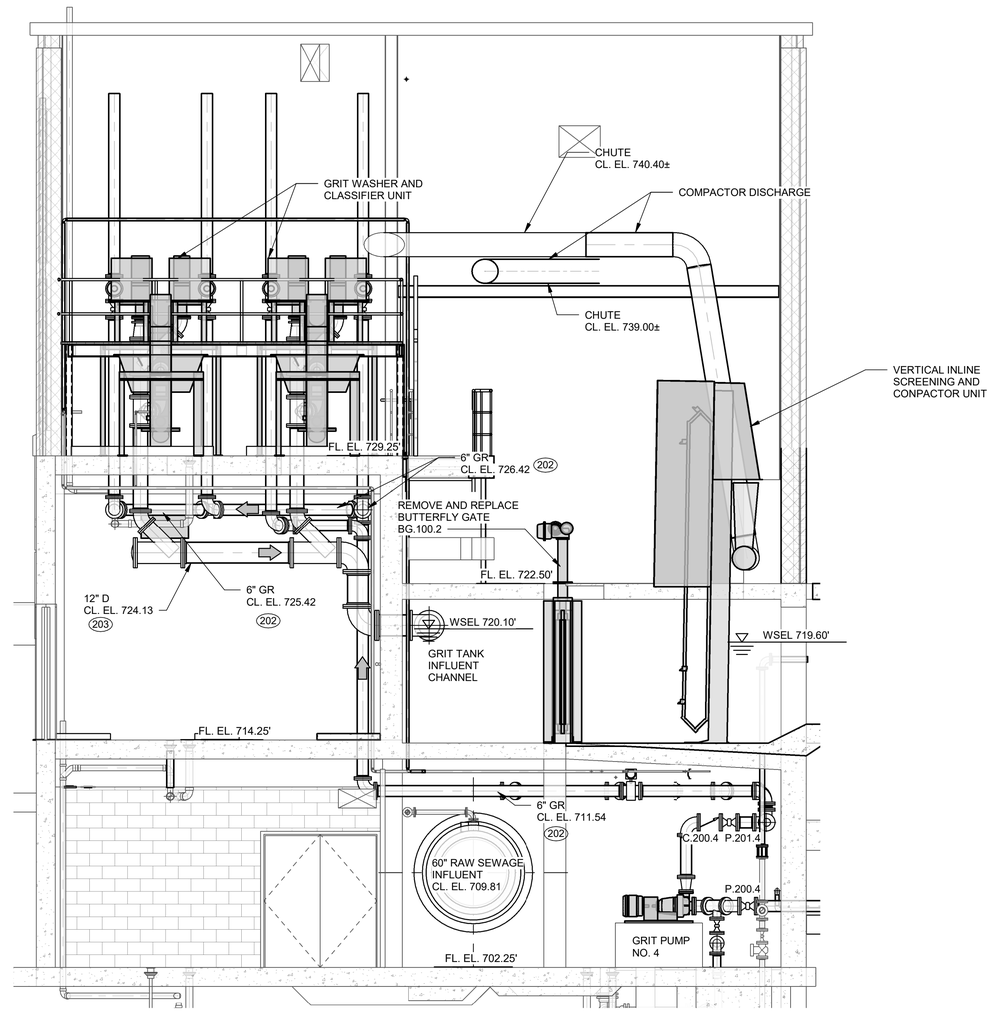

F SECTION
D-101 SCALE: 1/4" = 1'-0"

TETRA TECH
ENGINEERING BUSINESS NO. 2429
www.tetratech.com
3497 COOLIDGE ROAD
EAST LANSING, MI. 48823
TEL: (517)316.3963 FAX: (517)484.8140

MARK	DATE	DESCRIPTION	BY
1	6/22/21	ISSUED FOR BIDS	

CITY OF FLINT, MICHIGAN

FLINT WPC GRIT BAT "B" SYSTEM & PRIMARY TANKS IMPROVMENTS

SECTIONS

PROJ:	200-156238-21001
DESN:	BGB
DRWN:	TJL
CHKD:	MAT

D-302

4' 0' 4' 8'
SCALE: 1/4" = 1'-0"

Copyright: Tetra Tech

Bar measures 1 inch, otherwise drawing is not to scale

6/22/2021 6:29:27 AM BIM 360://200-156238-21001 Flint WWTP Grit/D-156238-21001 BATT B GRIT.rvt

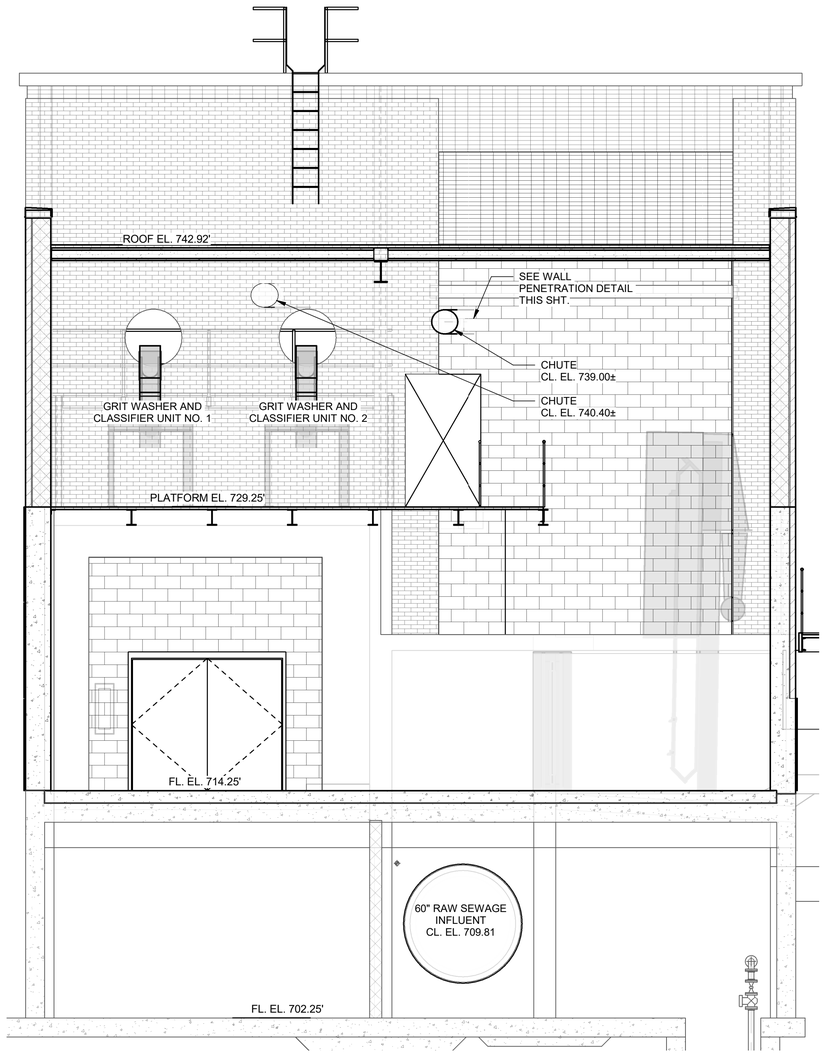

G / D-101 SECTION
SCALE: 1/4" = 1'-0"

WALL PENETRATION - MASONRY (PIPE DIAMETER OVER 4")

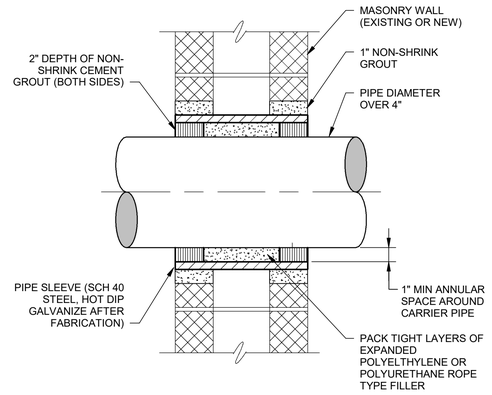

WALL PENETRATION - MASONRY
SCALE: 12" = 1'-0"

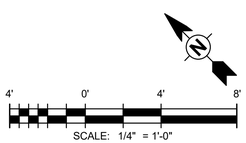

SCALE: 1/4" = 1'-0"

TETRA TECH
ENGINEERING BUSINESS NO. 2429
www.tetratech.com
3497 COOLIDGE ROAD
EAST LANSING, MI. 48823
TEL: (517)316.3963 FAX: (517)484.8140

MARK	DATE	DESCRIPTION	BY
1	6/22/21	ISSUED FOR BIDS	

CITY OF FLINT, MICHIGAN

FLINT WPC GRIT BAT "B" SYSTEM & PRIMARY TANKS IMPROVMENTS

SECTIONS

PROJ:	200-156238-21001
DESN:	BGB
DRWN:	TJL
CHKD:	MAT

D-303

Copyright: Tetra Tech

Bar measures 1 inch, otherwise drawing is not to scale

6/22/2021 6:29:29 AM BIM 360://200-156238-21001 Flint WWTP Grit/D-156238-21001 BATT B GRIT.rvt

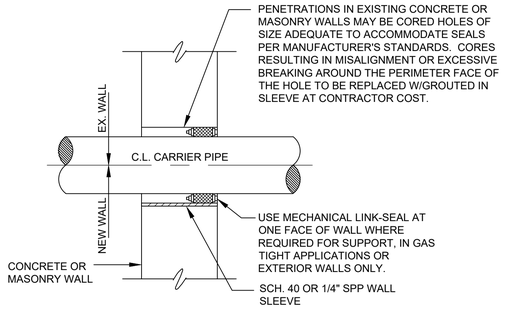

TYPICAL PIPE SLEEVE IN NON-EARTH OR NON-LIQUID RETAINING WALLS

SCALE: NONE (UNLESS NOTED OTHERWISE ON THE DRAWINGS)

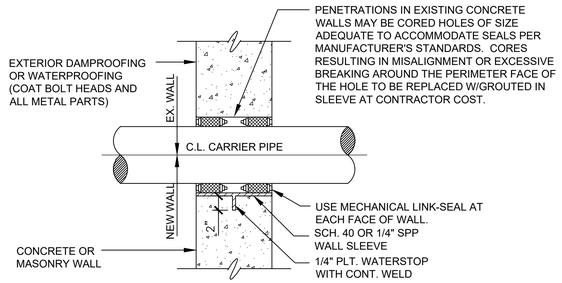

TYPICAL PIPE SLEEVE IN EARTH, RETAINING, OR GAS TIGHT WALLS

SCALE: NONE (UNLESS NOTED OTHERWISE ON THE DRAWINGS)

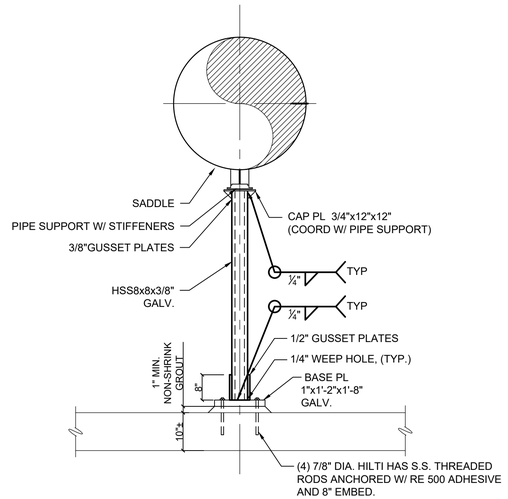

FIXED PIPE SUPPORT (FS-1)

SCALE: NONE

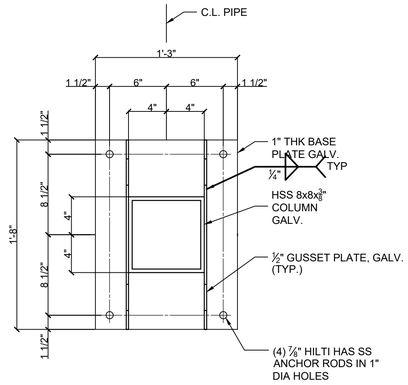

FIXED SUPPORT BASE PLATE DETAIL

SCALE: NONE

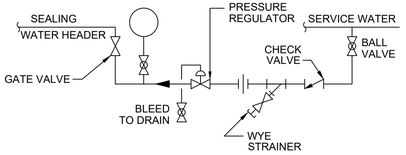

SEALING WATER PRESSURE REDUCING STATION

SCALE: NONE

NOTES:
1. INSTALL AS REQUIRED BY EQUIPMENT MANUFACTURER SYSTEM OPERATING PRESSURE.

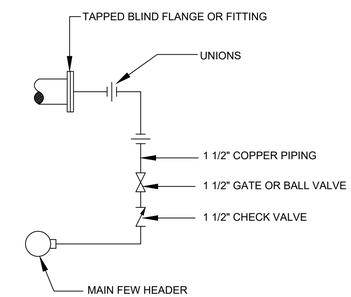

TYPICAL FLUSHING CONNECTION DETAIL (FHC)

SCALE: NONE SYMBOL:

NOTES:
1. FLUSHING CONNECTION SHALL BE 1-1/2". THE FOLLOWING FLUSHING CONNECTIONS SHALL BE HARD PIPED TO NEAREST PEW HEADER; GRIT PUMP SUCTION AND DISCHARGE PIPE.
2. HARD PIPED FLUSHING CONNECTIONS TO PUMP DISCHARGE PIPE BE INSTALLED WITH 1-1/2" CHECK VALVE (150 PSI) TO PREVENT GRIT FROM ENTERING FEW LINE.

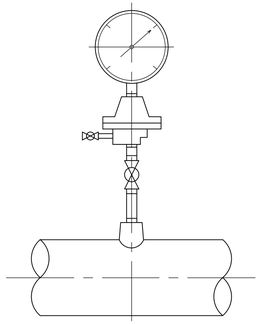

PRESSURE GAUGE DIAPHRAM WITH SEAL

NO SCALE

NOTES:
1. FOR ALL PIPE 2" & SMALLER USE BUSHING IN A TEE.
2. FOR DUCTILE IRON 2-1/2" & LARGER USE PIPE SADDLE W/BUSHING.
3. FOR STAINLESS STEEL PIPES 2-1/2" & LARGER AND PRESSURE VESSELS, USE THRED-O-LET AS SHOWN.
4. FOR ALL OTHER PIPING 2-1/2" OR LARGER, USE WELD-O-LET.

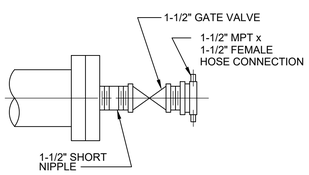

TYPICAL MANUAL FLUSHING CONNECTION

SCALE: NONE SYMBOL:

NOTES:
1. INCLUDES ALL NON LISTED HARD PIPED FLUSHING CONNECTIONS

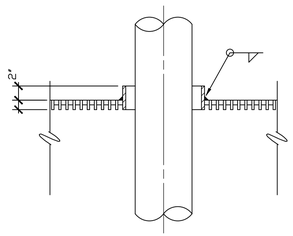

TYPICAL PIPE SLEEVE THROUGH FLOOR GRATING

FOR PIPING 4" DIA. AND LARGER

NO SCALE

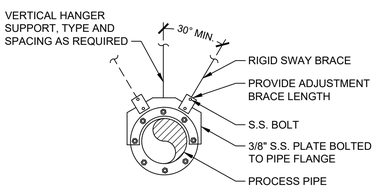

TYPICAL PIPE HANGER SWAY BRACE DETAIL

SCALE: NONE

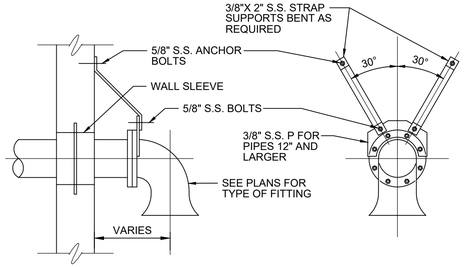

PIPE SUPPORT STRAP DETAIL

SCALE: NONE

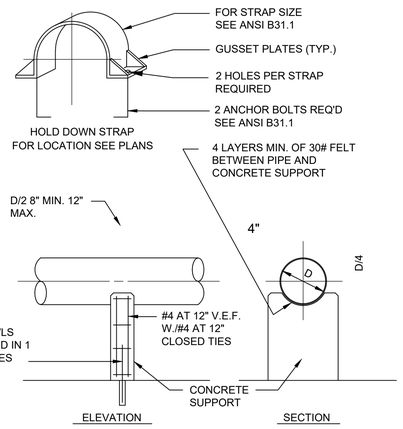

CONC. PIPE SUPPORT

TETRA TECH
www.tetratech.com
3497 COOLIDGE ROAD
EAST LANSING, MI. 48823
PHONE: (517)316.3963 FAX: (517)484.8140

MARK	DATE	DESCRIPTION	BY
1	6/22/21	ISSUED FOR BIDS	

CITY OF FLINT, MICHIGAN

FLINT WPC GRIT BAT "B" SYSTEM & PRIMARY TANKS IMPROVEMENTS

PROCESS DETAILS

PROJ:	200-156238-21001
DESN:	BGB
DRWN:	TJL
CHKD:	MAT

D-500

Copyright: Tetra Tech

6/22/2021 7:17:26 AM - O:\PROJECTS\LANSING\ER\156238\200-156238-21001\CAD\SHEETFILES\D-500 DETAILS.DWG - LORTZ, JASON

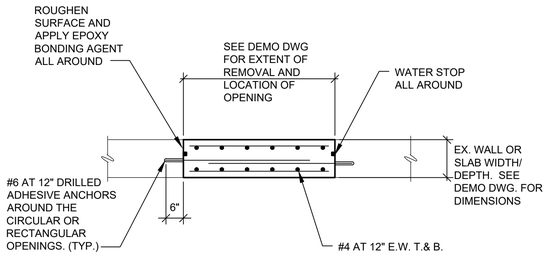

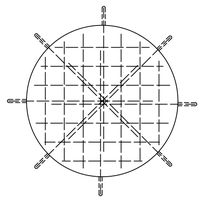

WALL PATCH DETAIL

NO SCALE

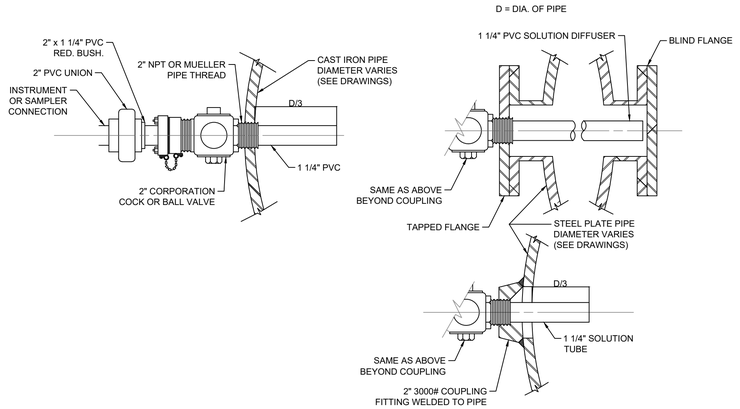

SAMPLE AND CHEMICAL DIFFUSER DETAIL

NO SCALE

NOTE:
TAP DETAIL TO BE USED FOR CONNECTION OF PROBES, SAMPLE LINES AND PIPE CONNECTIONS TO EXISTING PIPING.

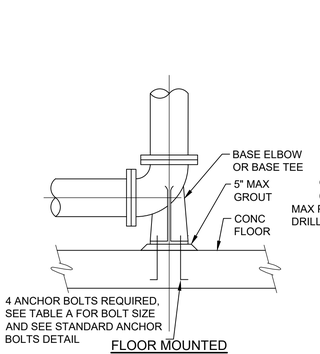

FLOOR MOUNTED

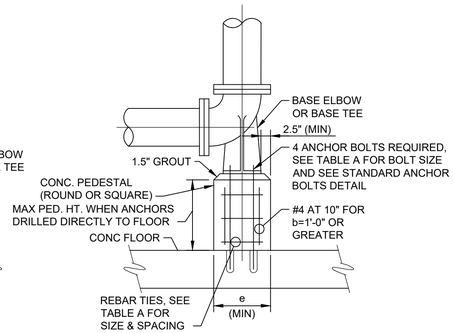

CONCRETE SHORT PEDESTAL

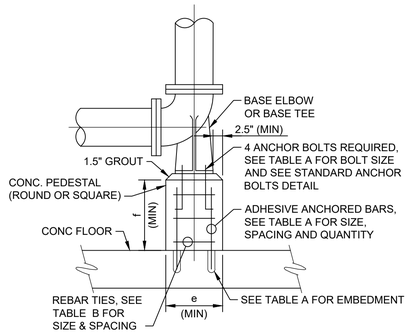

CONCRETE TALL PEDESTAL

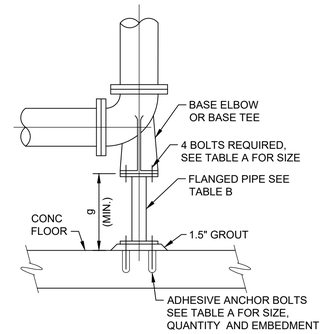

PIPE SUPPORT

NOTES:

1. EITHER SUPPORT MAY BE USED UNLESS NOTED OTHERWISE.
2. SUPPORTS FOR COMPRESSION LOADING AND SHALL NOT BE USED FOR THRUST ANCHORS OR SUPPORTS IN TENSION, SHEAR, OR BENDING.
3. ANCHOR DIRECTLY TO STRUCTURAL FLOOR AND NOT INTO FILLETS OR FLOOR TOPPINGS.
4. BASE FITTING SUPPORTS SIZED FOR 35' OF FULL PIPE OF WHICH 20 FEET IS VERTICAL WITH ALLOWANCE FOR FITTINGS AND FLANGES.

TYPICAL BASE ELBOW AND BASE TEE SUPPORT DETAIL

SCALE: NONE

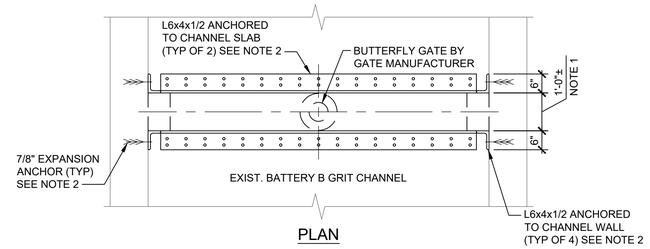

PLAN

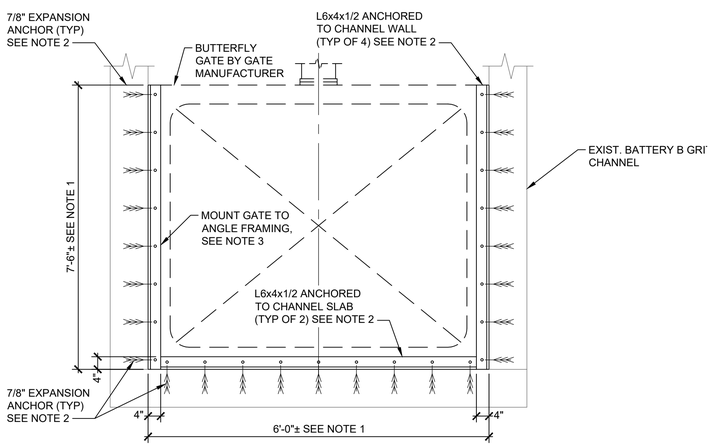

ELEVATION

BUTTERFLY GATE INSTALLATION DETAIL

SCALE: NTS

NOTES:

1. BUTTERFLY GATE DIMENSIONS TO BE FIELD VERIFIED PRIOR TO SUBMITTALS.
2. PROVIDE L6X4X$\frac{3}{8}$" ANGLE FRAMING FOR GATE INSTALLATION AS SHOWN. ANCHOR TO CHANNEL WALLS AND SLAB WITH EXPANSION ANCHORS.

PENETRATIONS IN EXISTING CONCRETE SLABS MAY BE CORED HOLES OF SIZE ADEQUATE TO ACCOMMODATE SEALS PER MANUFACTURER'S STANDARDS. CORES RESULTING IN MISALIGNMENT OR EXCESSIVE BREAKING AROUND THE PERIMETER FACE OF THE HOLE TO BE REPLACED W/GROUTED IN SLEEVE PER DETAIL AT CONTRACTOR COST.

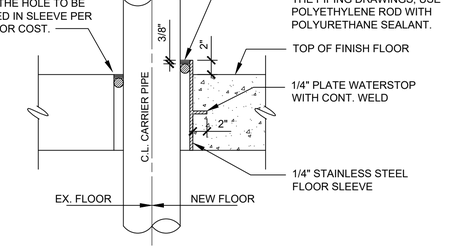

TYPICAL PIPE SLEEVE THROUGH FLOOR

SCALE: NTS (UNLESS OTHERWISE NOTED ON DRAWINGS)

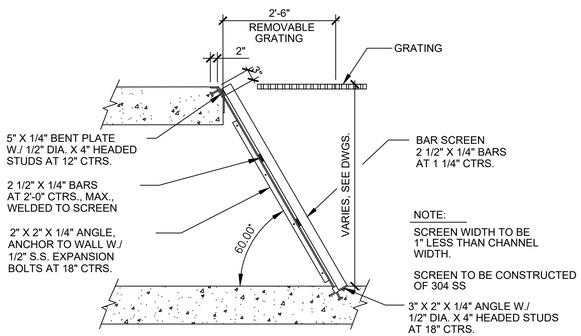

MANUAL STEEL BAR SCREEN DETAIL

SCALE: NONE

TABLE A - CONCRETE PEDESTAL						
FITTING SIZE	e (MIN) (DIA OR SQ)	f	ANCHOR BOLT DIA	ADHESIVE ANCHOR BARS NUMBER SIZE	ADHESIVE ANCHOR MIN EMBED.	REBAR TIES SIZE, SPACING
3"	12"	18"	1/2"	(4) - #6	9"	#4 AT 6"
4"	12"	18"	5/8"	(4) - #6	9"	#4 AT 6"
6"	12"	18"	5/8"	(4) - #6	9"	#4 AT 6"
8"	14"	24"	5/8"	(4) - #7	10.5"	#4 AT 7"
10"	14"	24"	5/8"	(4) - #7	10.5"	#4 AT 7"
12"	16"	18"	3/4"	(8) - #6	9"	#4 AT 8"
14"	16"	18"	3/4"	(8) - #6	9"	#4 AT 8"
16"	16"	18"	3/4"	(8) - #6	9"	#4 AT 8"
18"	18"	18"	3/4"	(8) - #6	9"	#4 AT 9"
20"	18"	18"	3/4"	(8) - #6	9"	#4 AT 9"
24"	18"	18"	3/4"	(8) - #6	9"	#4 AT 9"
30"	22"	21"	7/8"	(12) - #6	9"	#4 AT 11"
36"	24	24"	7/8"	(12) - #7	10.5"	#4 AT 12"
42"	28"	24"	1"	(16) - #7	10.5"	#4 AT 14"
48"	30"	27"	1 1/8"	(16) - #7	10.5"	#4 AT 14"
54"	32"	27"	1 1/8"	(20) - #7	10.5"	#4 AT 14"
60"	38"	31"	1 1/4"	(24) - #8	12"	#4 AT 16"
64"	44"	31"	1 1/4"	(28) - #8	12"	#4 AT 16"

TABLE B - BASE FITTING PIPE					
FITTING SIZE	g (MIN)	MIN PIPE & FLANGE SIZE	BOLT & ADHESIVE ANCHOR BOLT DIA	ANCHOR BOLT (EQ SPACING)	ADHESIVE ANCHOR MIN EMBEDMENT
3"	6"	2"	1/2"	4	6"
4"	6"	2 1/2"	5/8"	4	7.5"
6"	6"	2 1/2"	5/8"	4	7.5"
8"	7"	4"	5/8"	4	7.5"
10"	8"	4"	5/8"	4	7.5"
12"	8"	6"	3/4"	4	9"
14"	8"	6"	3/4"	4	9"
16"	8"	6"	3/4"	4	9"
18"	8"	8"	3/4"	4	9"
20"	9"	8"	3/4"	4	9"
24"	9"	8"	3/4"	4	9"
30"	12"	10"	7/8"	4	10.5"
36"	14"	12"	7/8"	6	10.5"
42"	16"	16"	1"	4	12"
48"	16"	18"	1 1/8"	4	13.5"
54"	18"	20"	1 1/8"	5	13.5"
60"	18"	24"	1 1/4"	5	15"
64"	19"	30"	1 1/4"	7	15"

TETRA TECH
www.tetratech.com
3497 COOLIDGE ROAD
EAST LANSING, MI. 48823
PHONE: (517)316.3963 FAX: (517)484.8140

MARK	DATE	DESCRIPTION	BY
1	6/22/21	ISSUED FOR BIDS	

CITY OF FLINT, MICHIGAN
FLINT WPC GRIT BAT "B" SYSTEM & PRIMARY TANKS IMPROVEMENTS
PROCESS DETAILS

PROJ: 200-156238-21001
DESN: BGB
DRWN: TJL
CHKD: MAT

D-501

Copyright: Tetra Tech

Bar Measures 1 inch, otherwise drawing not to scale

6/22/2021 7:18:00 AM - O:\PROJECTS\LANSING\ER\156238\200-156238-21001\CAD\SHEETFILES\D-500 DETAILS.DWG - LORTZ, JASON

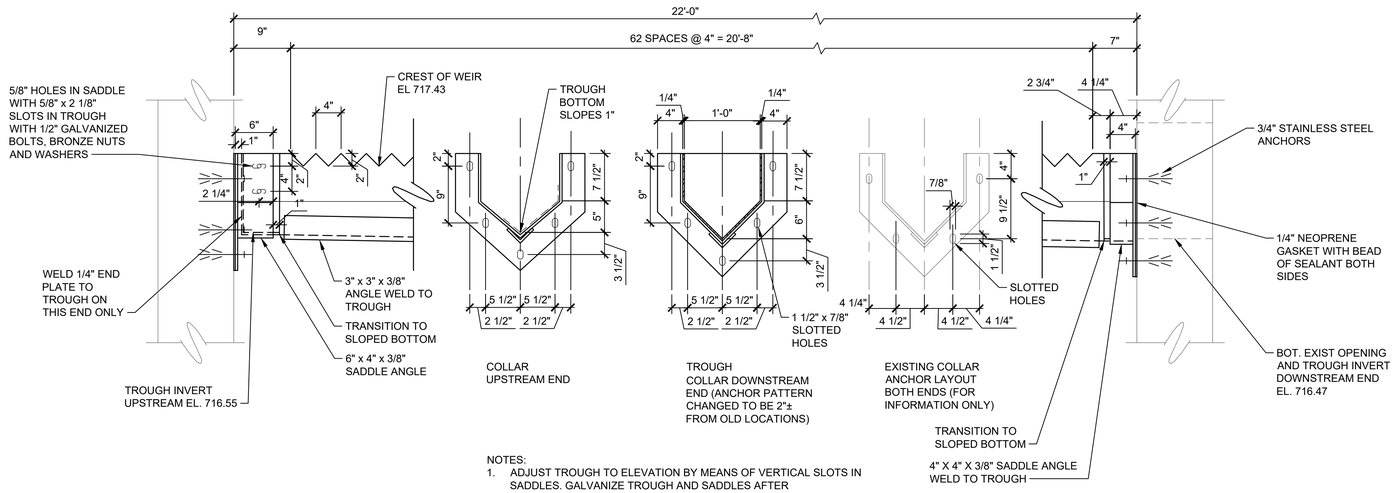

NOTES:

1. ADJUST TROUGH TO ELEVATION BY MEANS OF VERTICAL SLOTS IN SADDLES. GALVANIZE TROUGH AND SADDLES AFTER FABRICATION.
2. PROPOSED ANCHOR BOLTS LOCATIONS ARE SHOWN MIN 2" AWAY FROM EXISTING ANCHOR LOCATIONS. FIELD ADJUST IF REQUIRED TO POSITION ANCHORS IN SOLID CONCRETE.
3. LEAVE UPSTREAM SADDLE TROUGH NUTS SNUG TO ALLOW FOR EXPANSION.

PRIMARY TANK EFFLUENT TROUGH DETAIL

NO SCALE

TETRA TECH
www.tetratech.com
3497 COOLIDGE ROAD
EAST LANSING, MI. 48823
PHONE: (517)316.3963 FAX: (517)484.8140

MARK	DATE	DESCRIPTION	BY
1	6/22/21	ISSUED FOR BIDS	

CITY OF FLINT, MICHIGAN

FLINT WPC GRIT BAT "B" SYSTEM & PRIMARY TANKS IMPROVEMENTS

PROCESS DETAILS

PROJ:	200-156238-21001
DESN:	BGB
DRWN:	TJL
CHKD:	MAT

D-502

Copyright: Tetra Tech

6/22/2021 7:18:30 AM - O:\PROJECTS\LANSING\ER\156238\200-156238-21001\CAD\SHEETFILES\D-500 DETAILS.DWG - LORTZ, JASON

PIPEWORK SCHEDULE KEY

GENERAL

THE FOLLOWING PIPE SCHEDULE GIVES THE DESIGNATION FOR EACH PIPE LINE, PIPE SIZE, JOINT, MATERIAL, SERVICE AND OTHER PERTINENT DATA. THE KEY OF SYMBOLS FOR THE SCHEDULE IS AS FOLLOWS:

PROCESS PIPING

DI	DUCTILE IRON PIPE
GSP	GALVANIZED STEEL PIPE
HDPE	HIGH DENSITY POLYETHYLENE
SPP	STEEL PLATE PIPE
PRP	POLYPROPYLENE RESIN PLASTIC PIPE
PVC	PLASTIC PIPE
PVCP	POLYVINYL CHLORIDE GRAVITY
SSP	STAINLESS STEEL PIPE

PIPE JOINTS

AFC	ADAPTER FLANGE COUPLING
BFC	BOLTED FLEXIBLE COUPLING
FJ	FLANGED JOINT
FSJ	FUSED JOINT
GJ	GROOVE JOINT
MJ	MECHANICAL JOINT (RESTRAINED)
RPOC	RESTRAINED PUSH ON JOINT
SJ	SCREW JOINT
SWJ	SOLVENT WELD JOINT

REMARKS

CL	CLASS

VALVE & GATE SCHEDULE KEY:

THE FOLLOWING VALVE AND GATE SCHEDULES GIVES THE DESIGNATION FOR EACH VALVE AND GATE, ITS LOCATION, SERVICE SIZE, QUANTITY AND OTHER PERTINENT DATA.

THE DISTANCE GIVEN WITH EXTENSION STEMS OR SHAFTS IS THAT FROM CENTER LINE OF PORT TO TOP OF FLOOR AT FLOOR STAND OR FLOOR BOX, OR FROM CENTER LINE OF PORT TO GROUND SURFACE FOR VALVE BOX.

THE DISTANCE GIVEN FOR BUTTERFLY VALVES WITH EXTENSION BONNETS IS THAT FROM CENTER LINE OF VALVE TO CENTER LINE OF THE OPERATOR, 3 FEET ABOVE OPERATING FLOOR OR SLAB.

IN GENERAL, NO VALVES OR GATES SMALLER THAN 4 INCHES ARE INCLUDED IN THE SCHEDULE.

UNLESS OTHERWISE NOTED ON THE SCHEDULE, THE VALVE CLASS SHALL BE 150, EXCEPT BUTTERFLY VALVES FOR AIR SERVICE SHALL BE CLASS 25, STEMS SHALL BE OF THE NONRISING TYPE FOR VALVES, AND OF THE RISING TYPE FOR FOR GATES,

INCLUDED IN THE REMARKS COLUMN WILL BE EXCEPTION TO CLASS, STEM, SERVICE, MOTOR AND MOTOR ENCLOSURE REQUIREMENTS, ETC.

THE KEY OF SYMBOLS FOR SCHEDULE IS AS FOLLOWS:

VALVE JOINT

FJ	FLANGED JOINT
GC	GROOVED COUPLING
MJ	MECHANICAL JOINT
SJ	SOLVENT WELD JOINT
W	WAFER

VALVE OPERATOR

CW	CHAIN WHEEL (LENGTH)
H	HANDWHEEL
M	MOTOR
P	PNEUMATIC
WN	WRENCH NUT
L	LEVER

VALVE ACCESSORIES

RCS	REMOTE CONTROL STATION
LS	LIMIT SWITCH
SG	STEM GUIDE
VB	VALVE BOX
ES	EXTENSION STEM
EB	EXTENSION BONNET
FS	FLOOR STAND

VALVE AND GATE REMARKS

CL	CLASS
FC	FAIL CLOSE
FO	FAIL OPEN
NC	NORMALLY CLOSED
OS	OPEN SHUT
TH	THROTTLING TYPE

ADDITIONAL NOTES (ALL VALVES):

1. UNLESS OTHERWISE NOTED ON THE SCHEDULE, VALVE MOTORS SHALL BE OPEN-SHUT, 220/440 VOLT, 60 CYCLE, 3 PH, A.C. AND ENCLOSURES SHALL BE NEMA 4X. SEE ELECTRICAL DRAWINGS.
2. ALL MOTOR OPERATED VALVES IN RATED AREAS SHALL BE NEMA 7, CLASS 1, DIVISION 1. SEE ELECTRICAL, PROCESS, AND CIVIL DRAWINGS FOR RATED AREAS.

SLUICE GATE

TYPE

C	CONVENTIONAL
SC	SELF CONTAINED

BOTTOM

FB	FLUSH BOTTOM
SB	STANDARD BOTTOM

FRAME

FF	FLAT FRAME
FLF	FLANGE FRAME

FABRICATED SLIDE GATE

MATERIAL

A	ALUMINUM
FG	FIBERGLASS
SS	STAINLESS STEEL FRAME

SEAL

3S	SEAL ON 3 SIDES
4S	SEAL ON 4 SIDES (SLUICE GATE)
WG	WEIR GATE TOP SEAL ON 3 SIDES

OPEN DIRECTON

UP	OPEN UP
DN	OPEN DOWN

GATE OPERATOR

BG	BEVEL GEAR
H	HANDWHEEL
M	ELECTRIC MOTOR

GATE ACCESSORIES

ES	EXTENSIION STEM (FEET)
FS	FLOOR STAND
WB	WALL BRACKET
SC	STEM COVER
SG	STEM GUIDE
RPI	REMOTE POSITION INDICATOR

PIPE SCHEDULE

NO.	LOCATION	SERVICE	SIZE (INCHES)	MATERIALS	JOINTS	EXPOSED OR BURIED	TEST PRESSURE (PSI)	REMARKS
200	GRIT B LOWER LEVEL	RS	60	SPP, DIP	FJ, WJ	EXPOSED	25	
201	GRIT TANKS	GR	6	DIP	FJ, MJ	EXPOSED	50	
202	GRIT B BUILDING	GR	6	DIP	FJ	EXPOSED	100	
203	GRIT B BUILDING	D	6, 8, 12	DIP	FJ	EXPOSED	25	
204	GRIT B BUILDING	D	6	DIP	FJ	EXPOSED	25	

VALVE SCHEDULE

MARK	LOCATION	TYPE	SERVICE	SIZE (INCHES)	QUANT.	JOINT	OPERATOR	ACCESSORIES	REMARKS
PLUG VALVES (P)									
200.1 THRU 4	GRIT B BUILDING	P	GR	6	4	FJ	L		
201.1 THRU 4	GRIT B BUILDING	P	GR	6	4	FJ	M		ACTUATOR TO BE NEMA 7 RATED
202.1 THRU 3	GRIT B BUILDING	P	GR	6	3	FJ	CW		
203.1 THRU 4	GRIT B BUILDING	P	D	6	4	FJ	L		
204.1 THRU 4	GRIT B BUILDING	P	GR	6	4	FJ	CW		
MARK	LOCATION	TYPE	SERVICE	SIZE (INCHES)	QUANT.	JOINT	OPERATOR	ACCESSORIES	REMARKS
CHECK VALVES (C)									
200.1 THRU 4	GRIT B BUILDING	C	GR	6	4	FJ			
MARK	LOCATION	TYPE	SERVICE	SIZE (INCHES)	QUANT.	JOINT	OPERATOR	ACCESSORIES	REMARKS
BALL VALVES (BV)									
200	GRIT B BUILDING	BV	PEW	1.5		SJ	L		

GATE SCHEDULE

MARK	LOCATION	SERVICE	SIZE INCHES	QUANTITY	TYPE	BOTTOM	THIMBLE	HEAD (FEET) SEAT	HEAD (FEET) UNSEAT	OPER	ACCESSORIES	REMARKS
BUTTERFLY GATE (BG)												
BG.100.1 AND 2	GRIT B BLDG	RS	72"Wx84"H	2		SB	-	7	7	M	FS	TH, REPLACE EX GATES ACTUATORS TO BE NEMA 7 RATED
BG.101.1	GRIT B BYPASS	RS	72"Wx84"H	1		SB	-	7	7	M	FS	TH, REPLACE EX GATE ACTUATORS TO BE NEMA 7 RATED
BG.101.2	GRIT B BYPASS	RS	72"Wx84"H	1		SB	-	7	7	H	FS	REPLACE EX GATE

NOTES:
1. GATE OPENING SIZES LISTED ARE FOR CLEAR OPENING SIZE OF GATE.

MARK	LOCATION	SERVICE	INCHES	QUANTITY	OPEN DIRECTION	MATERIAL	SEAL	HEAD (FEET) SEAT	HEAD (FEET) UNSEAT	OPER	ACCESSORIES	REMARKS
FABRICATED SLIDE GATES (F)												
F.100.1 THRU 4	GRIT TANK	GRIT REMOVAL	36"W x 62"H	4	UP	SS	3S	5	5	H	BG, ES, FB	
F.1.29 THRU 1.52	PRIMARY TANKS - BATTERY A	PI	18" x 18" NOTE (2)	24	UP	SS	4S	5	5	M	ES (6.5'), FS SC, RPI	TH, THIMBLE EXISTING, OPEN IN 3 MINUTES 480V, FS IS 4'-4" SEE DWGS
F.1.53 THRU 1.68	PRIMARY TANKS - BATTERY B	PI	18" x 18" NOTE (2)	16	UP	SS	4S	5	5	M	ES (6.5'), FS SC, RPI	TH, THIMBLE EXISTING, OPEN IN 3 MINUTES 480V, FS IS 4'-4" SEE DWGS

NOTES:
1. GATE OPENING SIZES LISTED ARE FOR CLEAR OPENING SIZE OF GATE.
2. LOCATE GATE FRAME ANCHORS OUTSIDE OF EXISTING WALL THIMBLE. PROVIDE EITHER LARGER GATE WITH STANDARD FRAME OR 18" x 18" GATE WITH CUSTOM EXTRA LARGE FRAME.
3. GATES TO OPEN IN UP DIRECTION

MARK	LOCATION	SERVICE	INCHES	QUANTITY	TYPE	BOTTOM	MATERIAL	SEAT	UNSEAT	OPER	ACCESSORIES	REMARKS
STOP PLATE (SP)												
SP.100.1	GRIT B BLDG	RS	54"W X 48"H	1			AL			HAND PULL		

TETRA TECH
www.tetratech.com
3497 COOLIDGE ROAD
EAST LANSING, MI. 48823
PHONE: (517)316.3963 FAX: (517)484.8140

MARK	DATE	DESCRIPTION	BY
1	6/22/21	ISSUED FOR BIDS	

CITY OF FLINT, MICHIGAN
FLINT WPC GRIT BAT "B" SYSTEM & PRIMARY TANKS IMPROVEMENTS

SCHEDULES

PROJ:	200-156238-21001
DESN:	BGB
DRWN:	TJL
CHKD:	MAT

D-600

Copyright: Tetra Tech

Bar Measures 1 inch, otherwise drawing not to scale

6/22/2021 1:44:25 PM - O:\PROJECTS\LANSING\ER\156238\200-156238-21001\CAD\SHEETFILES\D-600 SCHEDULES.DWG - LORTZ, JASON

PRIMARY TANK NO.7

PRIMARY TANK NO.8

PRIMARY TANK NO.9

PRIMARY TANKS INFLUENT CHANNEL

GRIT TANK CHANNEL BELOW

GRIT DEWATERING BUILDING

ELECTRICAL CONTROL ROOM

GRIT TANK NO.3

GRIT TANK NO.4

REMOVE AND REPLACE EX. GATES

REMOVE AND REPLACE EX. HATCH

REMOVE EX. GRIT TANKS SCREW CONVEYOR DRIVE

REMOVE EX. 24" ENCLOSED GRIT BELT CONVEYORS

REMOVE EX. GRIT WASHER

REMOVE EX. 4" GRIT PIPING

REMOVE EX. 8" GRIT DEWATERING TANK EFFLUENT

REMOVE AND REPLACE EX. GATE

REMOVE DOOR

REMOVE EX. STAIRS

SAW CUT 6'-0" x 4'-0" OPENING FOR MANUAL BAR SCREEN

REMOVE DOOR

REMOVE EX. 2" SPRAY WATER

REMOVE EX. SWING DIFFUSER HEADER

REMOVE EX. GRIT BUCKET ELEVATORS NO. 1 & NO. 2

REMOVE EX. 6" AIR HEADER

REMOVE EX. SWING DIFFUSER HEADER

REMOVE EX. 2" SPRAY WATER

REMOVE EX. BAFFLE WALL

REMOVE AND REPLACE EX. GATE, STAND AND OPERATOR (TYP)

REMOVE EX. GATES

REMOVE EX. BAFFLE WALL

REMOVE EX. GATES

NOTE: COMMUNITOR PREVIOUSLY REMOVED

- ITEMS TO BE REMOVED

THE BACKGROUND DRAWING WAS ORIGINALLY PREPARED AS PART OF CONTRACT "WATER POLLUTION CONTROL PLANT IMPROVEMENTS AND MODIFICATIONS", CITY OF FLINT, MAY 1973 SHEET G-9

TETRA TECH
www.tetratech.com
3497 COOLIDGE ROAD
EAST LANSING, MI. 48823
PHONE: (517)316.3963 FAX: (517)484.8140

MARK	DATE	DESCRIPTION	BY
1	6/22/21	ISSUED FOR BIDS	

CITY OF FLINT, MICHIGAN

FLINT WPC GRIT BAT "B" SYSTEM & PRIMARY TANKS IMPROVEMENTS

GRIT DEWATERING BLDG. DEMOLITION PLAN ELEV. 729.25

PROJ:	200-156238-21001
DESN:	MCH
DRWN:	KK
CHKD:	MAT

DD-101

Copyright: Tetra Tech

6/22/2021 7:22:16 AM - O:\PROJECTS\LANSING\IER\156238\200-156238-21001\CAD\SHEETFILES\DD-101 DEMO.DWG - LORTZ, JASON

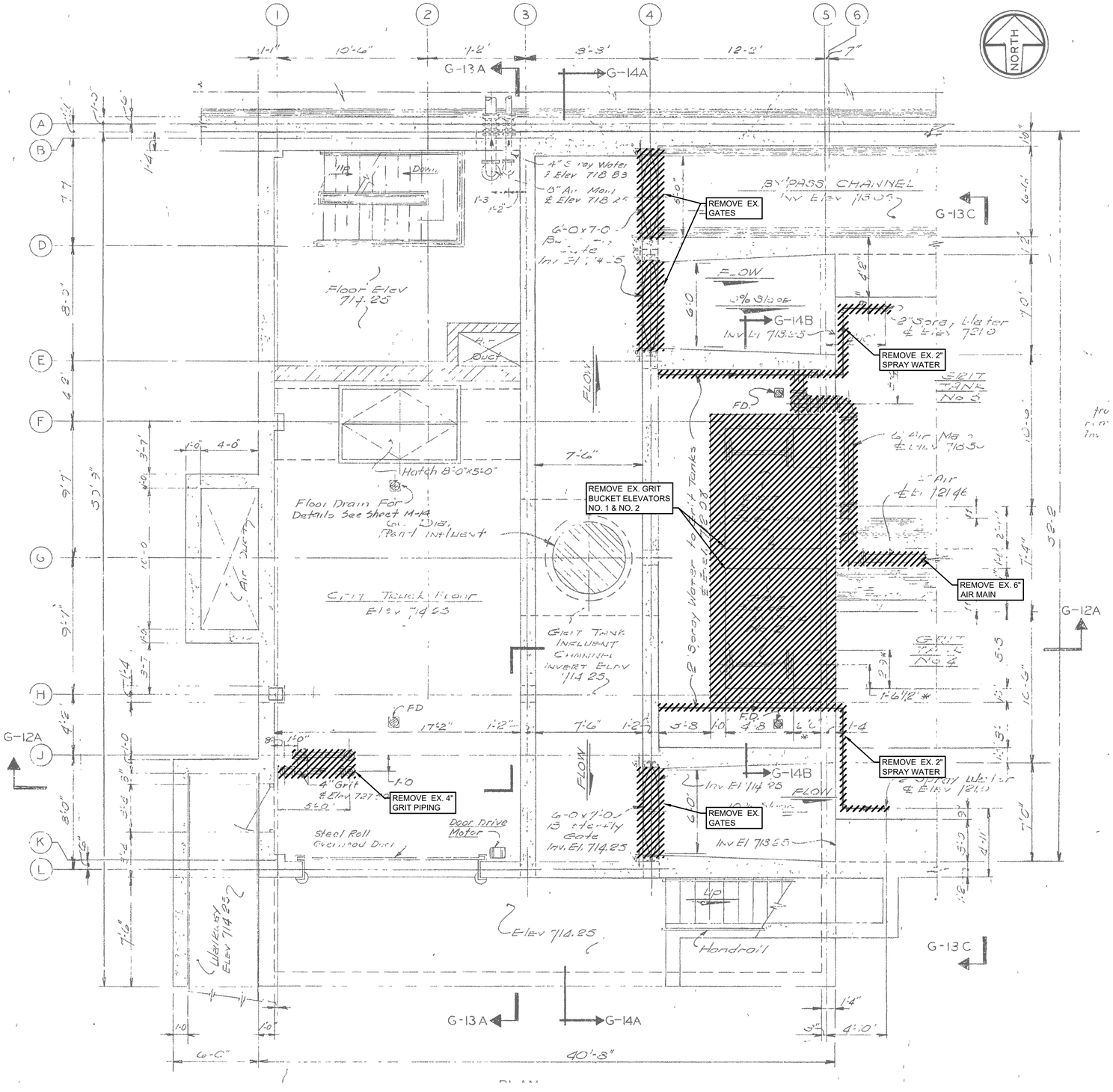

THE BACKGROUND DRAWING WAS ORIGINALLY PREPARED AS PART OF CONTRACT "WATER POLLUTION CONTROL PLANT IMPROVEMENTS AND MODIFICATIONS", CITY OF FLINT, MAY 1973 SHEET G-10

TETRA TECH
www.tetratech.com
3497 COOLIDGE ROAD
EAST LANSING, MI. 48823
PHONE: (517)316.3963 FAX: (517)484.8140

MARK	DATE	DESCRIPTION
1	6/22/21	ISSUED FOR BIDS

BY

CITY OF FLINT, MICHIGAN

FLINT WPC GRIT BAT "B" SYSTEM & PRIMARY TANKS IMPROVEMENTS

GRIT DEWATERING BLDG. DEMOLITION PLAN ELEV. 714.25

PROJ:	200-156238-21001
DESN:	MCH
DRWN:	KK
CHKD:	MAT

DD-102

Copyright: Tetra Tech

6/22/2021 7:23:30 AM - O:\PROJECTS\LANSING\IER\156238\200-156238-21001\CAD\SHEETFILES\DD-101 DEMO.DWG - LORTZ, JASON

REMOVE EX. 4" GRIT PIPE AND BLIND FLANGE AT GALLERY

REMOVE EX. 4" AND 2" SPRAY WATER AND REROUTE TO EQUIPMENT PER SCHEMATIC

REMOVE EX. GRIT TANKS SCREW CONVEYOR DRIVES

REMOVE AND REPLACE EX. INFLUENT PIPE REDUCERS, FLOW METER AND BASE ELBOW DOWNSTREAM OF GATE VALVE

REMOVE EX. 6" AIR HEADER AND CAP AT MAIN LINE

REMOVE EX. BAFFLE WALL

REMOVE EX. 20" GRIT SCREW CONVEYORS

REMOVE EX. GRIT BUCKET ELEVATORS NO. 1 & NO. 2

REMOVE EX. BAFFLE WALL

REMOVE GATE AND OPERATOR

REMOVE EX. ABANDONED SERVICE WATER TO SUMPS AND CAP AT MAIN HEADER

- ITEMS TO BE REMOVED

THE BACKGROUND DRAWING WAS ORIGINALLY PREPARED AS PART OF CONTRACT "WATER POLLUTION CONTROL PLANT IMPROVEMENTS AND MODIFICATIONS", CITY OF FLINT, MAY 1973 SHEET G-11

TETRA TECH
www.tetratech.com
3497 COOLIDGE ROAD
EAST LANSING, MI. 48823
PHONE: (517)316.3963 FAX: (517)484.8140

MARK	DATE	DESCRIPTION	BY
1	6/22/21	ISSUED FOR BIDS	

CITY OF FLINT, MICHIGAN

FLINT WPC GRIT BAT "B" SYSTEM & PRIMARY TANKS IMPROVEMENTS

GRIT DEWATERING BLDG. DEMOLITION PLAN ELEV. 702.25

PROJ:	200-156238-21001
DESN:	MCH
DRWN:	KK
CHKD:	MAT

DD-103

Copyright: Tetra Tech

6/22/2021 7:25:34 AM - O:\PROJECTS\LANSING\IER\156238\200-156238-21001\CAD\SHEETFILES\DD-101 DEMO.DWG - LORTZ, JASON

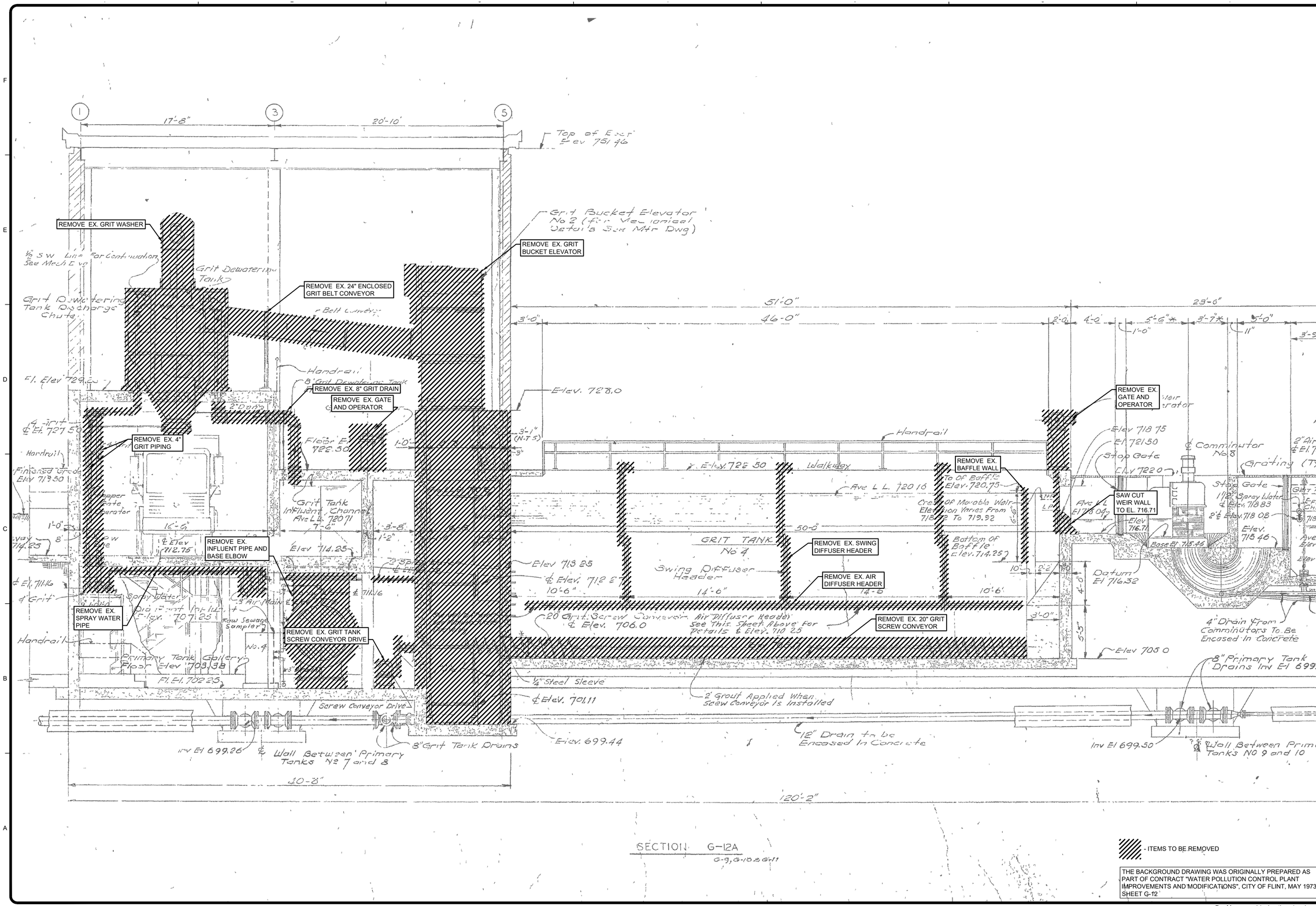

- ITEMS TO BE REMOVED

THE BACKGROUND DRAWING WAS ORIGINALLY PREPARED AS PART OF CONTRACT "WATER POLLUTION CONTROL PLANT IMPROVEMENTS AND MODIFICATIONS", CITY OF FLINT, MAY 1973 SHEET G-12

TETRA TECH
www.tetratech.com
3497 COOLIDGE ROAD
EAST LANSING, MI. 48823
PHONE: (517)316.3963 FAX: (517)484.8140

MARK	DATE	DESCRIPTION	BY
1	6/22/21	ISSUED FOR BIDS	

CITY OF FLINT, MICHIGAN

FLINT WPC GRIT BAT "B" SYSTEM & PRIMARY TANKS IMPROVEMENTS

GRIT DEWATERING BLDG. DEMOLITION SECTION

PROJ:	200-156238-21001
DESN:	MCH
DRWN:	KK
CHKD:	MAT

DD-104

Copyright: Tetra Tech

6/22/2021 7:26:57 AM - O:\PROJECTS\LANSING\IER\156238\200-156238-21001\CAD\SHEETFILES\DD-101 DEMO.DWG - LORTZ, JASON

REMOVE EX. 24" GRIT DEWATERING SCREW CONVEYOR

REMOVE EX. GRIT WASHER

REMOVE EX. ENCLOSED GRIT CONVEYORS & HOPPER

REMOVE EX. GRIT TANKS SCREW CONVEYOR DRIVES

REMOVE EX. 8" GRIT DEWATERING TANK EFFLUENT

REMOVE EX. 4" GRIT PIPING

REMOVE EX. 2" SPRAY WATER

ELECTRICAL CONTROL ROOM

Grit Hopper

Raw Sewage Sampler

SECTION G-13A
G-9, G-10, G-11

REMOVE EX. GATE AND OPERATOR

REMOVE EX. GATES AND OPERATORS

REMOVE EX. BAFFLE WALL

REMOVE EX. 20" GRIT SCREW CONVEYOR

TANK Nº 3

TANK Nº 4

SECTION G-13B
G-9

REMOVE EX. 2" SPRAY WATER PIPE

REMOVE EX. SWING AIR DIFFUSER ASSEMBLY

REMOVE EX. 6" AIR MAIN

REMOVE EX. 2" SPRAY WATER

REMOVE EX. 20" GRIT SCREW CONVEYORS

SECTION G-13C
G-9; G-10, G-11

- ITEMS TO BE REMOVED

THE BACKGROUND DRAWING WAS ORIGINALLY PREPARED AS PART OF CONTRACT "WATER POLLUTION CONTROL PLANT IMPROVEMENTS AND MODIFICATIONS", CITY OF FLINT, MAY 1973 SHEET G-13

TETRA TECH
www.tetratech.com
3497 COOLIDGE ROAD
EAST LANSING, MI. 48823
PHONE: (517)316.3963 FAX: (517)484.8140

MARK	DATE	DESCRIPTION	BY
1	6/22/21	ISSUED FOR BIDS	

CITY OF FLINT, MICHIGAN

FLINT WPC GRIT BAT "B" SYSTEM & PRIMARY TANKS IMPROVEMENTS

GRIT DEWATERING BLDG. DEMOLITION SECTION

PROJ:	200-156238-21001
DESN:	MCH
DRWN:	KK
CHKD:	MAT

DD-105

Copyright: Tetra Tech

6/22/2021 7:28:56 AM - O:\PROJECTS\LANSING\ER\156238\200-156238-21001\CAD\SHEETFILES\DD-101 DEMO.DWG - LORTZ, JASON

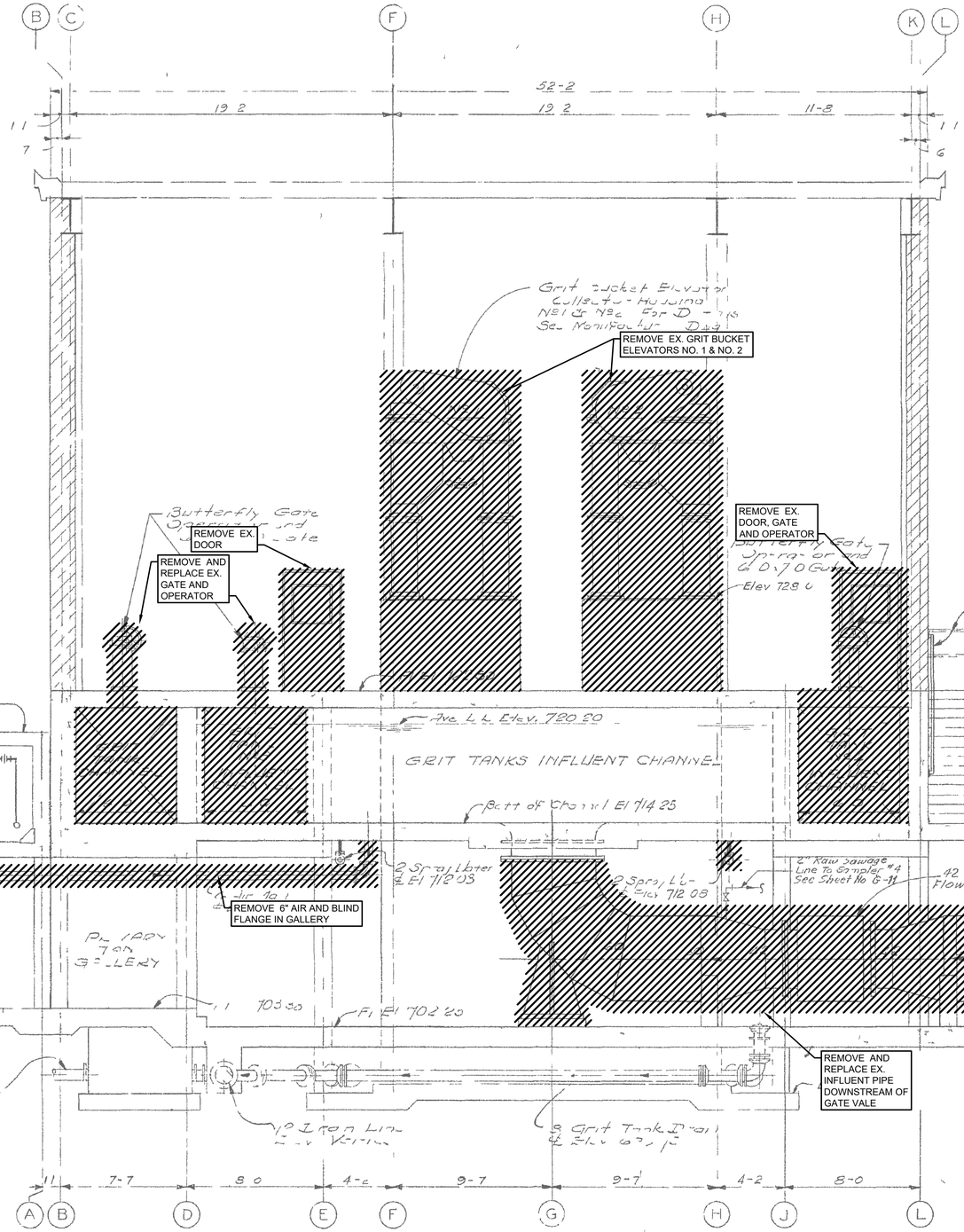

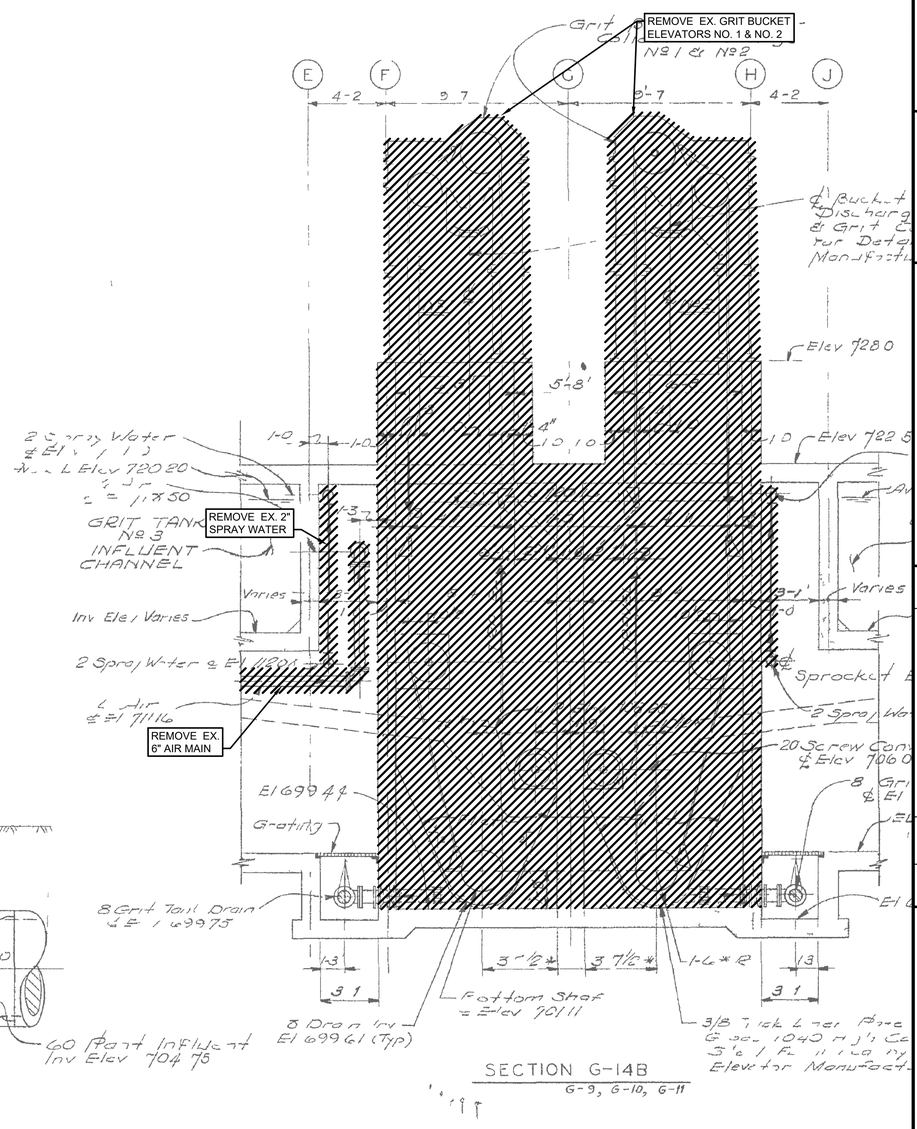

- ITEMS TO BE REMOVED

THE BACKGROUND DRAWING WAS ORIGINALLY PREPARED AS PART OF CONTRACT "WATER POLLUTION CONTROL PLANT IMPROVEMENTS AND MODIFICATIONS", CITY OF FLINT, MAY 1973 SHEET G-14

TETRA TECH
www.tetratech.com
3497 COOLIDGE ROAD
EAST LANSING, MI. 48823
PHONE: (517)316.3963 FAX: (517)484.8140

MARK	DATE	DESCRIPTION	BY
1	6/22/21	ISSUED FOR BIDS	

CITY OF FLINT, MICHIGAN

FLINT WPC GRIT BAT "B" SYSTEM & PRIMARY TANKS IMPROVEMENTS

GRIT DEWATERING BLDG. DEMOLITION SECTION

PROJ:	200-156238-21001
DESN:	MCH
DRWN:	KK
CHKD:	MAT

DD-106

Copyright: Tetra Tech

6/22/2021 7:30:55 AM - O:\PROJECTS\LANSING\IER\156238\200-156238-21001\CAD\SHEETFILES\DD-101 DEMO.DWG - LORTZ, JASON

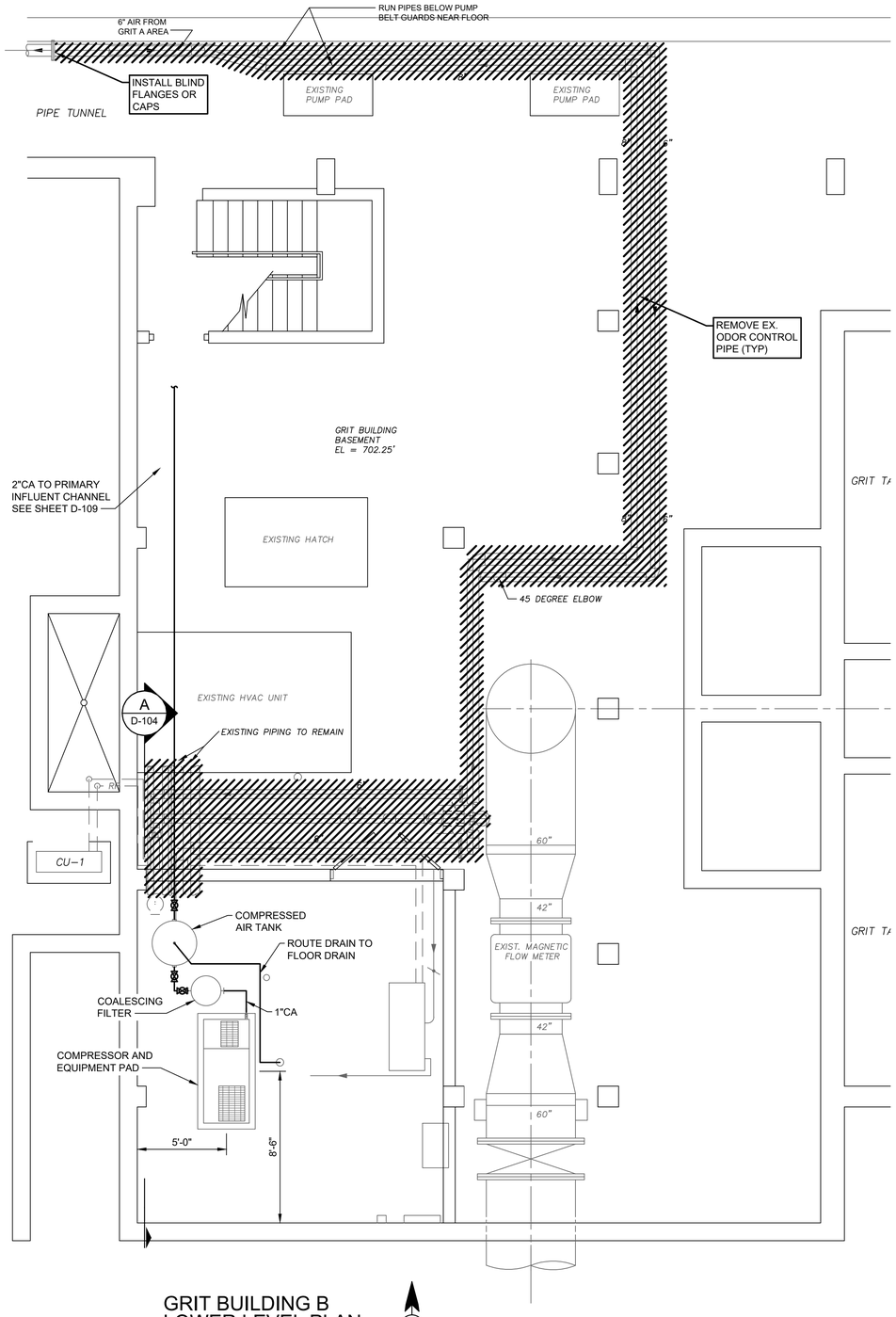

GRIT BUILDING B LOWER LEVEL PLAN

SCALE: 1/4" = 1'-0"

- ITEMS TO BE REMOVED

0 2' 4' 8'

SCALE: 1/4" = 1'-0"

THE BACKGROUND DRAWING WAS ORIGINALLY PREPARED AS PART OF CONTRACT "WATER POLLUTION CONTROL PLANT IMPROVEMENTS AND MODIFICATIONS", CITY OF FLINT, MAY 1973, SHEETS P-2

TETRA TECH
www.tetratech.com
3497 COOLIDGE ROAD
EAST LANSING, MI. 48823
PHONE: (517)316.3963 FAX: (517)484.8140

MARK	DATE	DESCRIPTION	BY
1	6/22/21	ISSUED FOR BIDS	

CITY OF FLINT, MICHIGAN

FLINT WPC GRIT BAT "B" SYSTEM & PRIMARY TANKS IMPROVEMENTS

BATTERY B GRIT BUILDING LOWER LEVEL PLAN AND SECTION

PROJ:	200-156238-21001
DESN:	BGB
DRWN:	TJL
CHKD:	MAT

DD-107

Copyright: Tetra Tech

Bar Measures 1 inch, otherwise drawing not to scale

6/22/2021 7:42:15 AM - O:\PROJECTS\LANSING\ER\156238\200-156238-210011\CAD\SHEETFILES\DD-107 DEMO.DWG - LORTZ, JASON

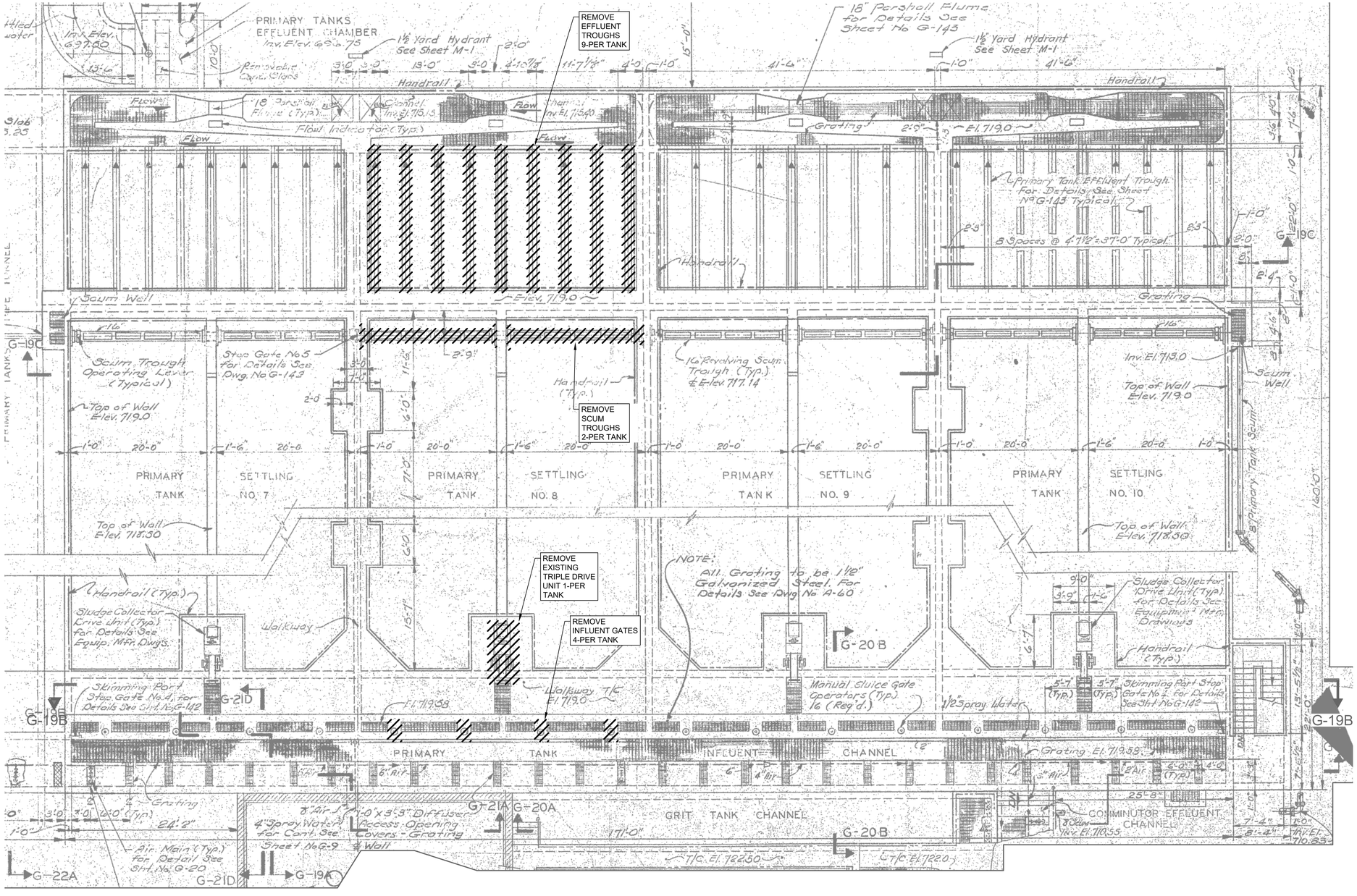

NOTES:

1. THIS SHEET SHOWS DEMOLITION FOR ONE TANK IN BATTERY B WHICH IS TYPICAL OF 10 TANKS TOTAL WITH 6 LOCATED IN BATTERY A AND 4 IN BATTERY B.
2. EACH TANK HAS 2 LONGITUDINAL COLLECTORS AND 1 CROSS COLLECTOR DRIVEN BY A SINGLE TRIPLE DRIVE UNIT.
3. ALL PRIMARY TANK COMPONENTS SHALL BE COMPLETELY REMOVED TO ALLOW INSTALLATION OF NEW EQUIPMENT EXCEPT FOR THE METAL "TEE RAILS" CAST IN THE FLOOR.

0 4' 8' 16'

SCALE: 1/8" = 1'-0"

- ITEMS TO BE REMOVED

THE BACKGROUND DRAWING WAS ORIGINALLY PREPARED AS PART OF CONTRACT "WATER POLLUTION CONTROL PLANT IMPROVEMENTS AND MODIFICATIONS", CITY OF FLINT, MAY 1973 SHEET G-18

TETRA TECH
www.tetratech.com
3497 COOLIDGE ROAD
EAST LANSING, MI. 48823
PHONE: (517)316.3963 FAX: (517)484.8140

MARK	DATE	DESCRIPTION	BY
1	6/22/21	ISSUED FOR BIDS	

CITY OF FLINT, MICHIGAN

FLINT WPC GRIT BAT "B" SYSTEM & PRIMARY TANKS IMPROVEMENTS

PRIMARY SETTLING TANKS DEMOLITION TYPICAL PLAN

PROJ:	200-156238-21001
DESN:	RGK
DRWN:	RGK
CHKD:	MAT

DD-108

Copyright: Tetra Tech

Bar Measures 1 inch, otherwise drawing not to scale

6/21/2021 12:55:00 PM - O:\PROJECTS\LANSING\IER\156238\200-156238-21001\CAD\SHEETFILES\DD-101 DEMO.DWG - KALIMAN, ROGER

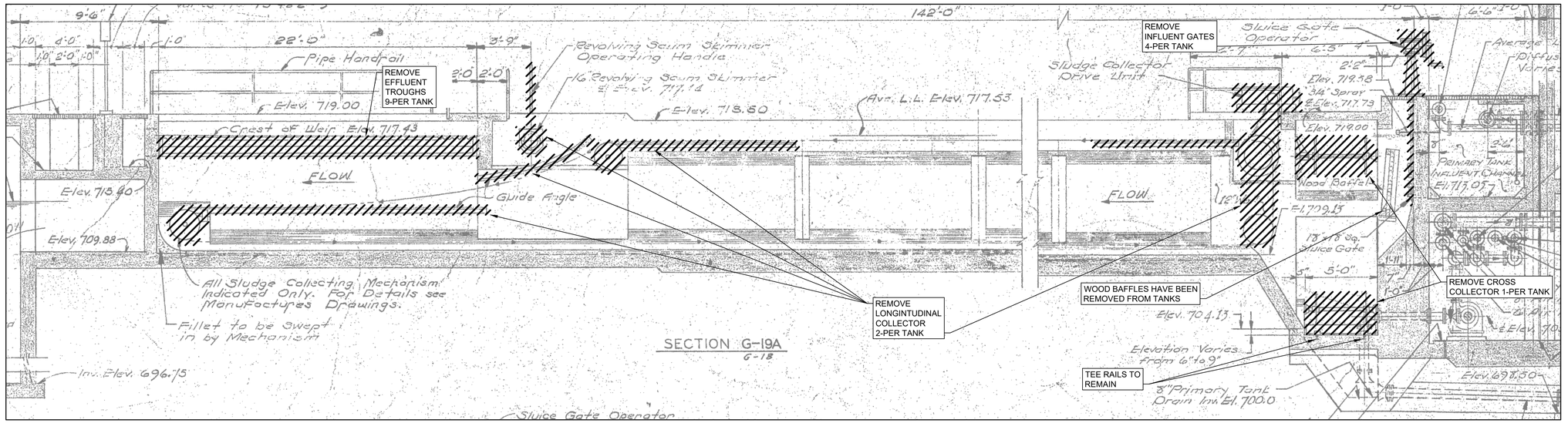

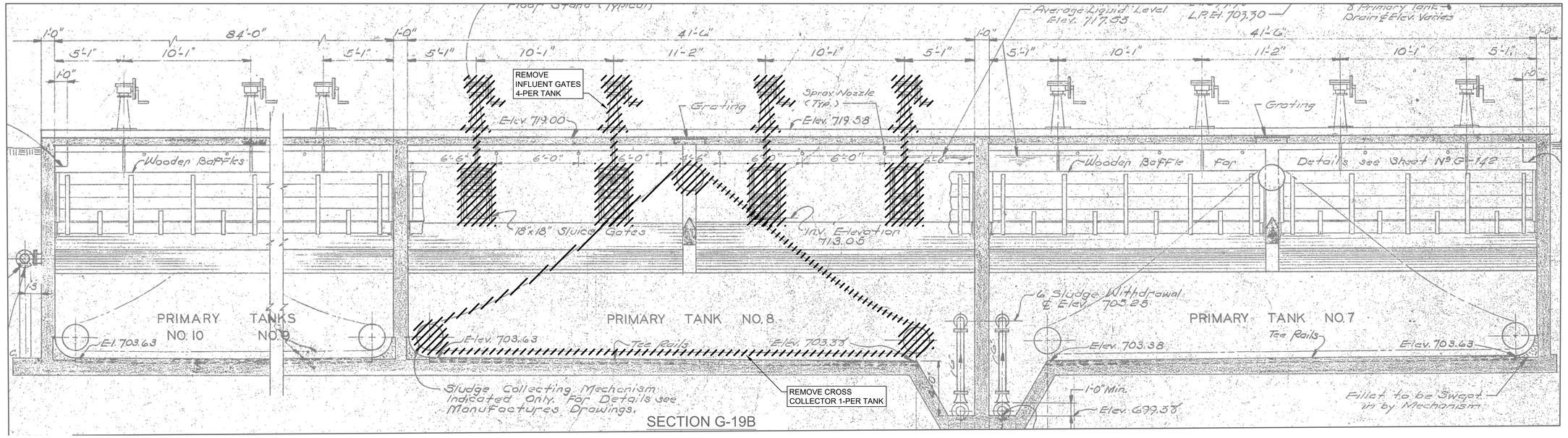

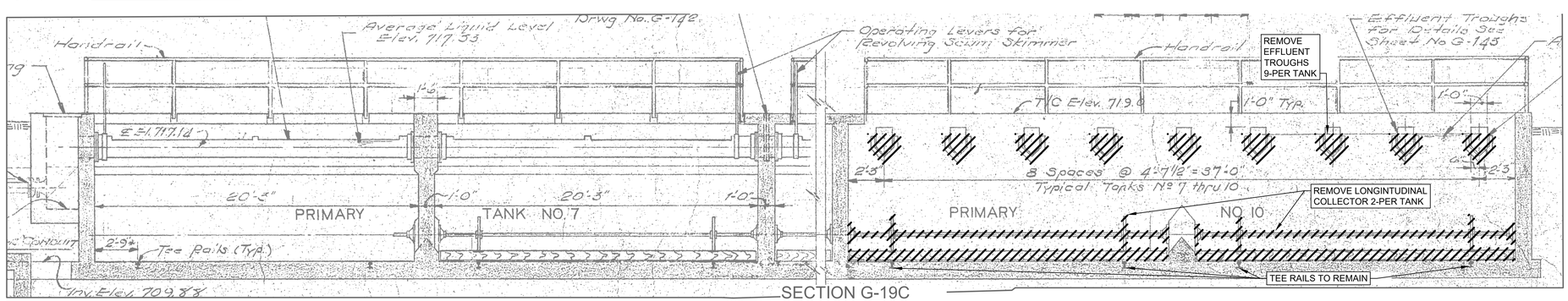

NOTES:
1. THIS SHEET SHOWS DEMOLITION FOR ONE TANK IN BATTERY B WHICH IS TYPICAL OF 10 TANKS TOTAL WITH 6 LOCATED IN BATTERY A AND 4 IN BATTERY B.

SCALE: 1/4" = 1'-0"

- ITEMS TO BE REMOVED

THE BACKGROUND DRAWING WAS ORIGINALLY PREPARED AS PART OF CONTRACT "WATER POLLUTION CONTROL PLANT IMPROVEMENTS AND MODIFICATIONS", CITY OF FLINT, MAY 1973 SHEET G-19

TETRA TECH
www.tetratech.com
3497 COOLIDGE ROAD
EAST LANSING, MI. 48823
PHONE: (517)316.3963 FAX: (517)484.8140

MARK	DATE	DESCRIPTION	BY
1	6/22/21	ISSUED FOR BIDS	

CITY OF FLINT, MICHIGAN

FLINT WPC GRIT BAT "B" SYSTEM & PRIMARY TANKS IMPROVEMENTS

PRIMARY SETTLING TANKS DEMOLITION TYPICAL SECTIONS

PROJ:	200-156238-21001
DESN:	RGK
DRWN:	RGK
CHKD:	MAT

DD-109

Copyright: Tetra Tech

Bar Measures 1 inch, otherwise drawing not to scale

6/21/2021 12:57:55 PM - O:\PROJECTS\LANSING\ENGINEER\156238\200-156238-210011\CAD\SHEETFILES\DD-101 DEMO.DWG - KALIMAN, ROGER

MECHANICAL LEGEND

- 20x12 SA — DUCT SIZE & SYSTEM ABBREVIATION; FIRST FIGURE IS DIMENSION SHOWN ON PLAN
- DUCT SECTION, POSITIVE PRESSURE
- DUCT SECTION, NEGATIVE PRESSURE
- NEW DUCTWORK
- FLEXIBLE DUCTWORK
- DUCT TRANSITION
- RECT. TO ROUND TRANSITION
- BRANCH DUCTWORK
- TURNING VANES
- CEILING DIFFUSER - SUPPLY
- CEILING DIFFUSER - RETURN
- CEILING DIFFUSER - EXHAUST
- CEILING DIFFUSER - ROUND
- LINEAR SLOT DIFFUSER (DOUBLE SLOT)
- LOUVER AND SCREEN
- FIRE DAMPER, PROVIDE ACCESS DOOR
- VOLUME DAMPER
- BACKDRAFT DAMPER
- SUPPLY/INTAKE AIRFLOW DIRECTION
- EXHAUST AIRFLOW DIRECTION
- GRILLE OR REGISTER, SIDEWALL
- PIPE CAP
- PIPE CONNECTION, BOTTOM
- PIPE CONNECTION, TOP
- PIPE ELBOW, TURNED UP
- PIPE ELBOW, TURNED DOWN
- PIPE TEE
- ANCHOR, INTERMEDIATE
- BUTTERFLY VALVE
- GATE VALVE
- BALL VALVE
- CHECK VALVE
- STRAINER VALVE
- THREE-WAY CONTROL VALVE
- TWO-WAY CONTROL VALVE
- PRESSURE GAUGE
- DOOR UNDERCUT
- MANUAL AIR VENT
- AUTOMATIC AIR VENT
- PUMP (SCHEMATIC)
- THERMOSTAT
- CO_2 — CARBON DIOXIDE SENSOR
- CO — CARBON MONOXIDE SENSOR
- M — MOTORIZED DAMPER
- A — PNEUMATIC DAMPER
- S — EMERGENCY SHUTDOWN SWITCH
- DP — DIFFERENTIAL PRESSURE SENSOR
- SD — DUCT SMOKE DETECTOR
- M — MASTER EMERGENCY SHUTDOWN SWITCH
- H — HUMIDISTAT

NOTES:

1. THIS LEGEND IS FOR REFERENCE ONLY
2. ALL SYMBOLS WHICH APPEAR WITHIN THE LEGEND MAY NOT APPLY TO THIS PROJECT.

MECHANICAL ABBREVIATIONS

AAV	AUTOMATIC AIR VENT
ABS	ABSOLUTE
AD	ACCESS DOOR
ADJ	ADJUSTABLE
AFF	ABOVE FINISHED FLOOR
AFG	ABOVE FINISHED GRADE
AHU	AIR HANDLING UNIT
AP	ACCESS PANEL
APD	AIR PRESSURE DROP
APPROX	APPROXIMATE
BFF	BELOW FINISHED FLOOR
BHP	BREAK HORSEPOWER
CA	COMPRESSED AIR
CAP	CAPACITY
CHWR	CHILLED WATER RETURN
CHWS	CHILLED WATER SUPPLY
CONC	CONCRETE
COND	CONDENSATE
CONN	CONNECTION
CONT	CONTINUATION
CP-1	CONTROL PANEL WITH DESIGNATION
CU	CONDENSING UNIT
CW	CHILLED WATER
DB	DRY BULB
DEG	DEGREES
DEMO	DEMOLITION
DIA	DIAMETER
DN	DOWN
DWG	DRAWING
EA	EXHAUST AIR
EAG	EXHAUST AIR GRILLE
EAT	ENTERING AIR TEMPERATURE
EF	EXHAUST FAN
EMCS	ENERGY MANAGEMENT AND CONTROL SYSTEM
ENT	ENTERING
ERV	ENERGY RECOVERY VENTILATOR
ESP	EXTERNAL STATIC PRESSURE
ET	EXPANSION TANK
EUH	ELECTRIC UNIT HEATER
EWT	ENTERING WATER TEMPERATURE
EXH	EXHAUST
F	FAHRENHEIT
FCU	FAN COIL UNIT
FD	FIRE DAMPER
FH	FIRE HYDRANT
FLEX	FLEXIBLE
FM	FLOW METER
FPM	FEET PER MINUTE
GAL	GALLONS
GH	GRAVITY HOOD
GM	GAS METER
GPM	GALLONS PER MINUTE
GUH	GAS UNIT HEATER
HP	HORSEPOWER
HWR	HOT WATER RETURN
HWS	HOT WATER SUPPLY
ID	INSIDE DIAMETER/DIMENSION
IE	INVERT ELEVATION
IN	INCH
L	LOUVER
LAT	LEAVING AIR TEMPERATURE
LP	LOUVERED PENTHOUSE
LVL	LEVEL
LWT	LEAVING WATER TEMPERATURE
M	METER
MAU	MAKEUP AIR UNIT
MAX	MAXIMUM
MEZZ	MEZZANINE
MFR	MANUFACTURER
MIN	MINIMUM
MISC	MISCELLANEOUS
N/A	NOT APPLICABLE
NG	NATURAL GAS
NTS	NOT TO SCALE
OA	OUTDOOR AIR
OD	OUTSIDE DIAMETER
OED	OPEN ENDED DUCT
PD	PRESSURE DROP
PRV	PRESSURE REDUCING VALVE
PSI	POUNDS PER SQUARE INCH
R	RADIUS
RA	RETURN AIR
RAG	RETURN AIR GRILLE
REFRIG	REFRIGERANT
RH	RADIANT HEATER
RL	REFRIGERANT LIQUID LINE
RPM	REVOLUTIONS PER MINUTE
RS	REFRIGERANT SUCTION LINE
SA	SUPPLY AIR
SAG	SUPPLY AIR GRILLE
SB	SECURITY BARS
SF	SUPPLY FAN
SPEC	SPECIFICATION
STD	STANDARD
T	THERMOMETER
TA	TRANSFER AIR
TBD	TO BE DETERMINED
TEMP	TEMPERATURE
TSP	TOTAL STATIC PRESSURE
TSTAT	THERMOSTAT
TYP	TYPICAL
UH	UNIT HEATER
VAV	VARIABLE AIR VOLUME
VFD	VARIABLE FREQUENCY DRIVE
VIF	VERIFY IN FIELD
VRF	VARIABLE REFRIGERANT FLOW
W	WATT
WB	WET BULB
WMS	WIRE MESH SCREEN
WS	WASTE STACK
Ø	DIAMETER

SYMBOLS AND TAGS

- HVAC - # — NEW EQUIPMENT TAG
- HVAC - #(E) — EXISTING EQUIPMENT TO REMAIN
- HVAC - #(R) — EXISTING EQUIPMENT TO BE RELOCATED
- HVAC - #(D) — EXISTING EQUIPMENT TO BE DEMOLISHED
- LIMIT OF DEMOLITION
- CONNECT TO EXISTING
- # — KEYNOTE
- SAD-# / ### CFM — AIR TERMINAL AND AIRFLOW TAG
- OR
- CD-A | ### — AIR QUANTITY DELIVERED BY DEVICE IN CFM; AIR TERMINAL MARK AS INDICATED IN SCHEDULE

AREA OUT OF SCOPE

AREA OF DEMOLITION

GENERAL MECHANICAL NOTES

1. ALL MECHANICAL WORK SHALL BE IN STRICT COMPLIANCE WITH THE LATEST APPLICABLE EDITION OF THE INTERNATIONAL MECHANICAL AND PLUMBING CODE AND APPLICABLE PROVISIONS OF THE INTERNATIONAL FUEL GAS CODE (IFGC).
2. THESE DRAWINGS ARE SCHEMATIC IN NATURE AND ARE NOT INTENDED TO SHOW ALL POSSIBLE CONDITIONS. IT IS INTENDED THAT A COMPLETE SYSTEM BE PROVIDED WITH ALL NECESSARY EQUIPMENT, APPURTENANCES, AND CONTROLS, COMPLETELY COORDINATED WITH ALL DISCIPLINES. ALL PARAMETERS GIVEN IN THESE DOCUMENTS SHALL BE STRICTLY CONFORMED WITH. ANY ITEMS AND LABOR REQUIRED FOR A COMPLETE SYSTEM IN ACCORDANCE WITH ALL APPLICABLE CODES, STANDARDS, AND THESE CONTRACT DOCUMENTS SHALL BE FURNISHED WITHOUT OCCURRING ANY ADDITIONAL COST TO THE OWNER. CAREFULLY REVIEW ALL CONTRACT DOCUMENTS AND THE DESIGN OF OTHER TRADES BEFORE PREPARING SHOP DRAWINGS.
3. COORDINATE EQUIPMENT AND PIPING WITH ALL OTHER DISCIPLINES AND TRADES. MAKE ALL OFFSETS AND TRANSITIONS TO COORDINATE WITH OTHER TRADES WITHOUT ANY ADDITIONAL EXPENSE TO THE OWNER.
4. COORDINATE THE EXACT LOCATION AND SIZE OF ALL ROOF, WALL, AND SLAB PENETRATIONS WITH THE ARCHITECTURAL DRAWINGS.
5. MOUNT THERMOSTATS WHERE INDICATED ON PLANS, 4'-0" A.F.F. UNLESS NOTED OTHERWISE.
6. COORDINATE WITH ELECTRICAL CONTRACTOR TO VERIFY CONTROL VOLTAGES WITH EQUIPMENT AND PROVIDE ACCORDINGLY.

DUCTWORK NOTES

1. ALL DUCTWORK IS SHOWN AS FREE AREA INSIDE DIMENSIONS.
2. DO NOT CONSTRUCT OR INSTALL TAPS OUT OF REDUCERS, TEES AND OR ELBOWS.
3. ALLOW FOR FIELD MEASURED OFFSETS OR TRANSITIONS, ELBOWS ETC.
4. RECTANGULAR ELBOWS SHALL BE RADIUS FITTINGS WITH CENTERLINE RADIUS EQUAL TO 1.5 TIMES THE DUCT WIDTH WHERE SPACE PERMITS. OTHERWISE, RECTANGULAR DUCTS SHALL BE 90 DEG. ELBOWS WITH DOUBLE THICKNESS TURNING VANES. NO OTHERS WILL BE ALLOWED.

TETRA TECH
ENGINEERING BUSINESS NO. 2429
www.tetratech.com
3497 COOLIDGE ROAD
EAST LANSING, MI 48823
TEL: (577) 316-3930 FAX: (517) 484-8140

MARK	DATE	DESCRIPTION	BY
1	06/22/21	ISSUED FOR BIDS	

CITY OF FLINT, MICHIGAN

FLINT WPC GRIT BAT "B" SYSTEM & PRIMARY TANKS IMPROVEMENT

ABBREVIATIONS, LEGENDS, AND GENERAL NOTES

PROJ:	200-156238-21001
DESN:	MJG
DRWN:	JRJ
CHKD:	MJG

M-001

Copyright: Tetra Tech

BIM 360://200-156238-21001 Flint WWTP Grit\M-156238-21001 BATT B GRIT.rvt
6/21/2021 4:44:20 PM

Bar measures 1 inch, otherwise drawing is not to scale

KEYNOTES

1. DEMOLISH EXISTING 8" GAS VENT DUCT FROM LOWER LEVEL ELEVATION 702.25' UP TO ROOF. INFILL AND PATCH FLOOR PENETRATIONS AT DUMPSTER ROOM FLOOR AND CEILING SLABS, ELEVATION 714.25' AND 729.25' RESPECTIVELY, TO BE AIR AND WATER TIGHT.
2. DEMOLISH EXISTING SUPPLY AIR DUCTWORK IN EXISTING DUMPSTER ROOM ELEVATION 714.25' BACK TO MAIN SUPPLY HEADER IN DUCT CHASE. CUT AND CAP. INFILL WALL PENETRATION PER ARCHITECTURAL/STRUCTURAL REQUIREMENTS.
3. DEMOLISH EXISTING EXHAUST DUCT FROM EXISTING DUMPSTER ROOM ELEVATION 714.25' UP TO MAIN FLOOR ELEVATION 722.5'. DEMOLISH ASSOCIATED EXHAUST GRILLE, EXTERIOR EXHAUST LOUVER, AND SHEET METAL COVER ON EXISTING WINDOW.
4. EXISTING DUCTWORK, MECHANICAL EQUIPMENT, AND ALL ASSOCIATED ASSECESORIES, SUPPORTS, WIRING AND CONTROLS SERVING THE STAIRWELL ARE TO REMAIN.

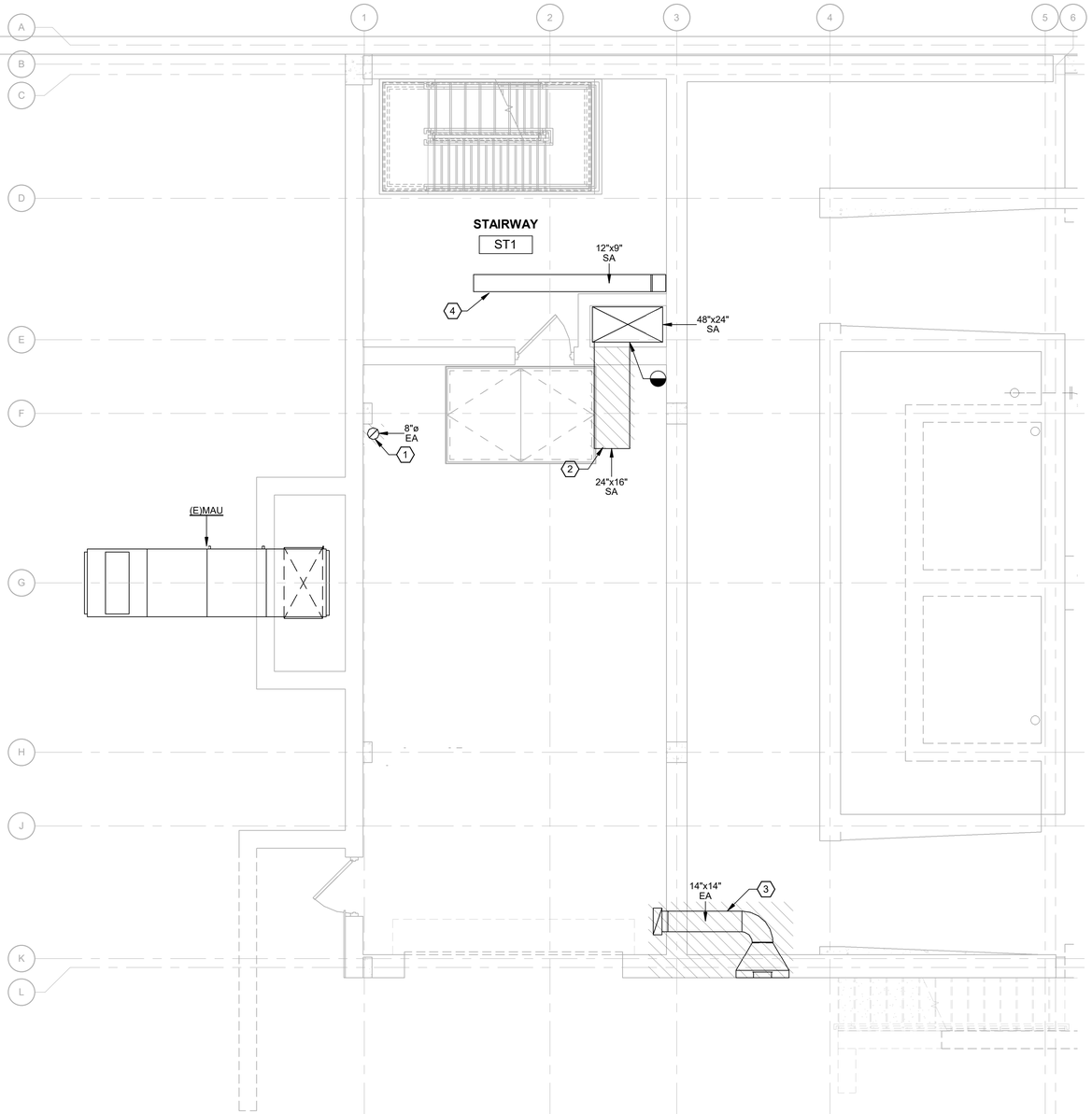

ELEVATION 714.25' MECHANICAL DEMOLITION PLAN

SCALE: 1/4" = 1'-0"

SCALE: 1/4" = 1'-0"

Bar measures 1 inch, otherwise drawing is not to scale

TETRA TECH
ENGINEERING BUSINESS NO. 2429
www.tetratech.com
3497 COOLIDGE ROAD
EAST LANSING, MI 48823
TEL: (577) 316-3930 FAX: (517) 484-8140

MARK	DATE	DESCRIPTION	BY
1	06/22/21	ISSUED FOR BIDS	

CITY OF FLINT, MICHIGAN

FLINT WPC GRIT BAT "B" SYSTEM & PRIMARY TANKS IMPROVEMENT

MECHANICAL DEMOLITION FLOOR PLANS - 714.25'

PROJ:	200-156238-21001
DESN:	MJG
DRWN:	JRJ
CHKD:	MJG

M-101

Copyright: Tetra Tech

6/21/2021 4:44:23 PM BIM 360://200-156238-21001 Flint WWTP Grit/M-156238-21001 BATT B GRIT.rvt

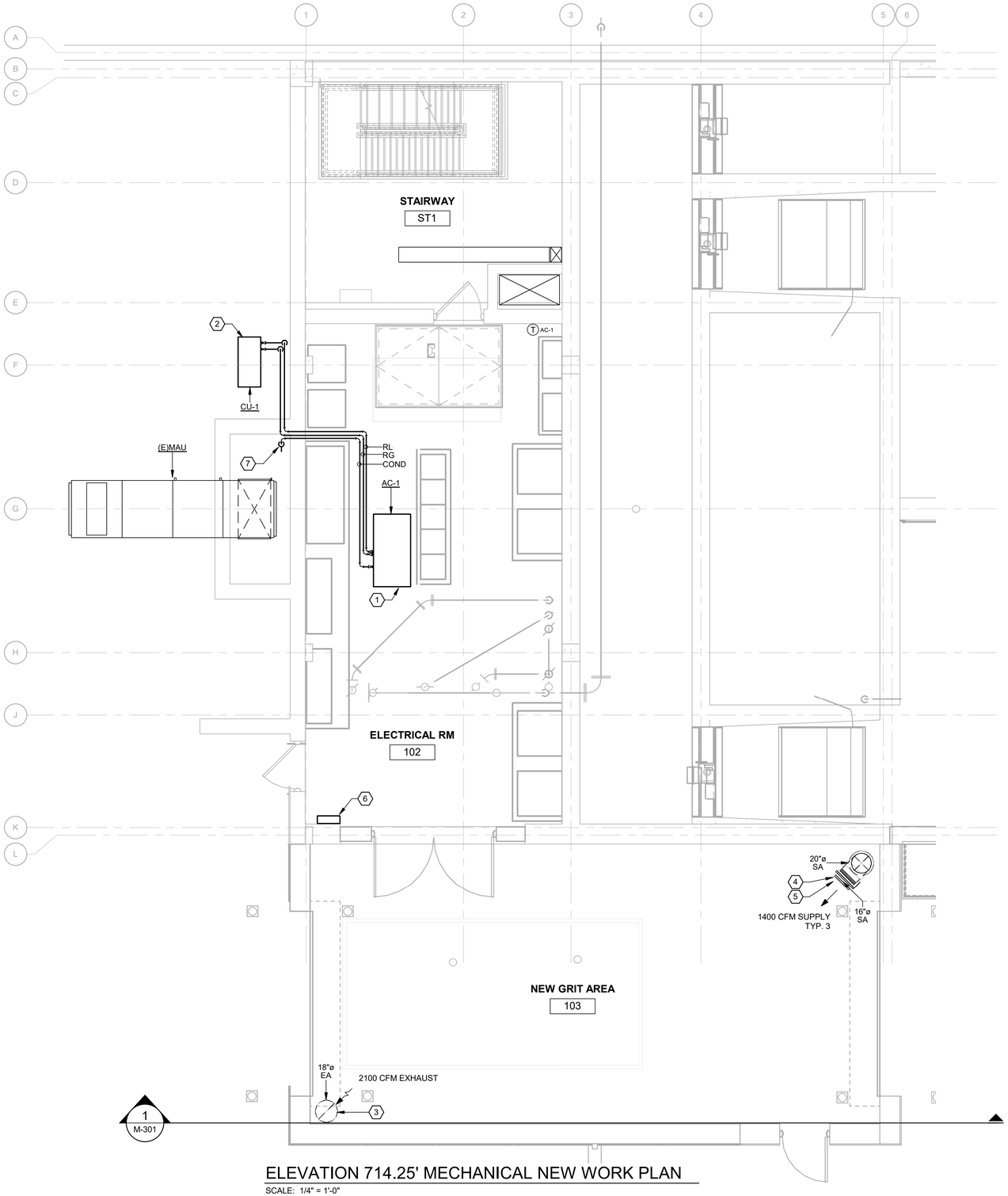

ELEVATION 714.25' MECHANICAL NEW WORK PLAN

SCALE: 1/4" = 1'-0"

KEYNOTES

1. SPLIT SYSTEM AIR CONDITIONING UNIT SERVING THE ELECTRICAL ROOM IS TO BE SUPPORTED FROM THE CEILING PER MANUFACTURER SPECIFICATIONS. UNIT IS TO BE SUPPORTED WITH THE TOP OF THE UNIT AT MINIMUM 2'-0" BELOW THE SLAB ABOVE. COORDINATE LOCATION OF UNIT WITH EXISTING PLUMBING AND PROCESS PIPING. COORDINATE LOCATION OF UNIT WITH NEW ELECTRICAL EQUIPMENT.
2. NEW SPLIT SYSTEM CONDENSING UNIT IS TO BE PROVIDED WITH A CONCRETE PAD, ON GRADE. COORDINATE LOCATION OF CONDENSING UNIT WITH EXTERIOR TRANSFORMER.
3. PROVIDE 18" OPEN EXHAUST AIR DUCT INLET WITH MANUAL VOLUME DAMPER. BOTTOM OF EXHAUST INTLET IS TO BE AT MINIMUM 1'-6" A.F.F.
4. PROVIDE 16" OPEN SUPPLY AIR DUCT OUTLET WITH MANUAL VOLUME DAMPER. BOTTOM OF SUPPLY OUTLET IS TO BE AT MINIMUM 2'-0" A.F.F.
5. PROVIDE 16" OPEN SUPPLY AIR DUCT OUTLET WITH MANUAL VOLUME DAMPER. BOTTOM OF SUPPLY OUTLET IN CENTER OF BRANCH IS TO BE AT MINIMUM 13'-6" A.F.F. TOP SUPPLY AIR OUTLET AT THE TOP OF VERTICAL BRANCH IS TO BE MOUNTED AT MOST 2'-0" BELOW ROOF LEVEL.
6. PROVIDE MAKE UP AIR UNIT REMOTE TEMPERATURE SUPPLY CONTROL PANEL WITH DISCHARGE TEMPERATURE CONTROL SUITABLE FOR NEMA-12 ENVIRONMENTS.
7. ROUTE CONDENSATE PIPING FROM AC-1 TO FLOOR DRAIN IN EXTERIOR DUCT CHASE. COORDINATE PIPE ROUTING IN ELECTRICAL ROOM TO AVOID ELECTRICAL EQUIPMENT AND EXISTING PIPING.

TETRA TECH
ENGINEERING BUSINESS NO. 2429
www.tetratech.com
3497 COOLIDGE ROAD
EAST LANSING, MI 48823
TEL: (577) 316-3930 FAX: (517) 484-8140

MARK	DATE	DESCRIPTION	BY
1	06/22/21	ISSUED FOR BIDS	

CITY OF FLINT, MICHIGAN

FLINT WPC GRIT BAT "B" SYSTEM & PRIMARY TANKS IMPROVEMENT

MECHANICAL NEW WORK FLOOR PLAN - 714.25'

PROJ:	200-156238-21001
DESN:	MJG
DRWN:	JRJ
CHKD:	MJG

M-201

SCALE: 1/4" = 1'-0"

Bar measures 1 inch, otherwise drawing is not to scale

Copyright: Tetra Tech

6/21/2021 4:44:27 PM BIM 360://200-156238-21001 Flint WWTP Grit\M-156238-21001 BATT B GRIT.rvt

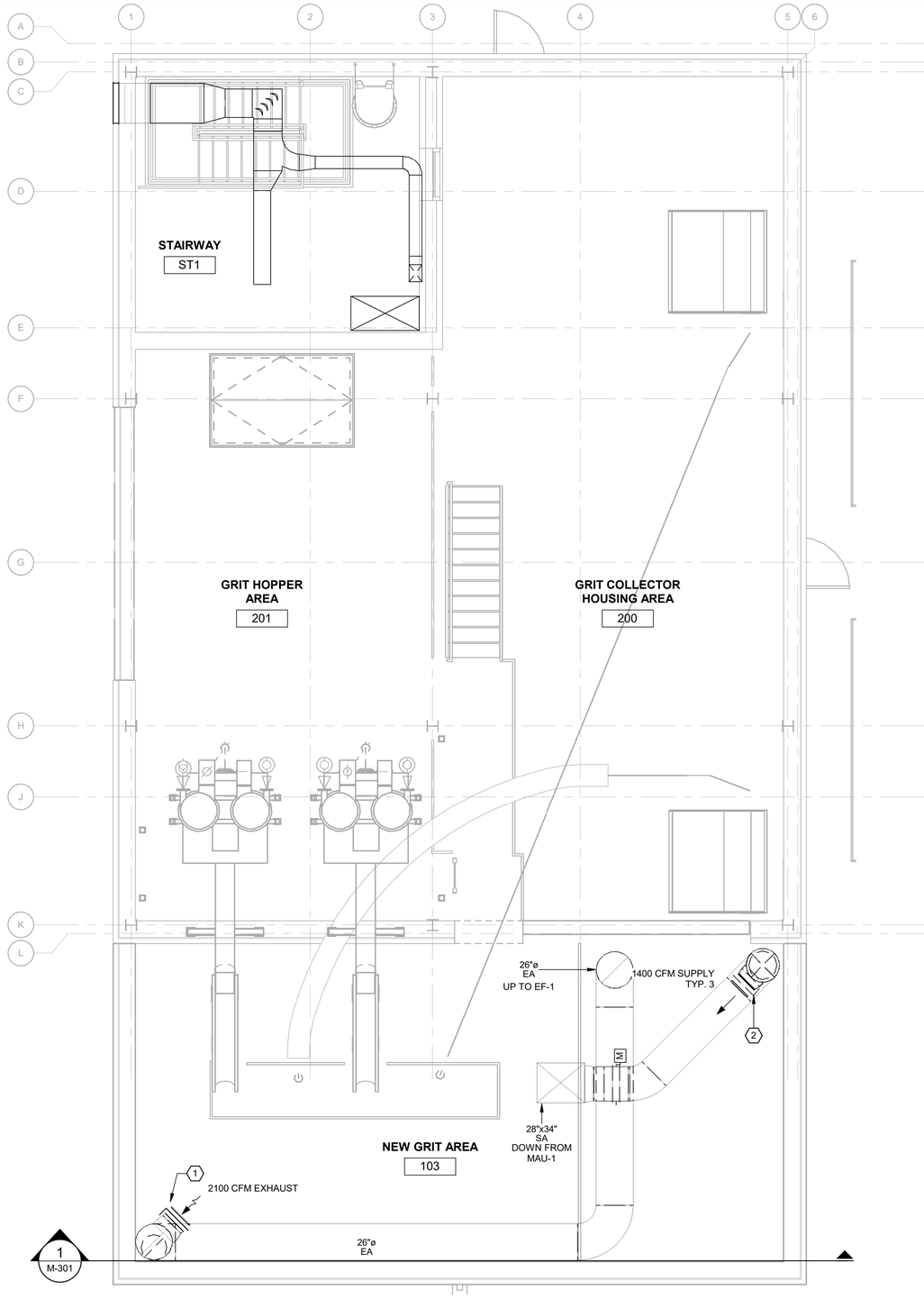

ELEVATION 729.25' MECHANICAL NEW WORK PLAN

SCALE: 1/4" = 1'-0"

KEYNOTES

1. PROVIDE 18" OPEN EXHAUST AIR DUCT INLET WITH MANUAL VOLUME DAMPER. TOP OF EXHAUST INLET IS TO BE AT MOST 1'-6" BELOW ROOF LEVEL.
2. PROVIDE 16" OPEN SUPPLY AIR DUCT OUTLET WITH MANUAL VOLUME DAMPER. BOTTOM OF SUPPLY OUTLET IN CENTER OF BRANCH IS TO BE AT MINIMUM 13'-6" A.F.F. TOP SUPPLY AIR OUTLET AT THE TOP OF VERTICAL BRANCH IS TO BE MOUNTED AT MOST 2'-0" BELOW ROOF LEVEL.

TETRA TECH
ENGINEERING BUSINESS NO. 2429
www.tetratech.com
3497 COOLIDGE ROAD
EAST LANSING, MI 48823
TEL: (577) 316-3930 FAX: (517) 484-8140

MARK	DATE	DESCRIPTION	BY
1	06/22/21	ISSUED FOR BIDS	

CITY OF FLINT, MICHIGAN

FLINT WPC GRIT BAT "B" SYSTEM & PRIMARY TANKS IMPROVEMENT

MECHANICAL NEW WORK FLOOR PLAN - 729.25'

PROJ:	200-156238-21001
DESN:	MJG
DRWN:	JRJ
CHKD:	MJG

M-202

SCALE: 1/4" = 1'-0"

Copyright: Tetra Tech

Bar measures 1 inch, otherwise drawing is not to scale

6/21/2021 4:44:30 PM BIM 360://200-156238-21001 Flint WWTP Grit\M-156238-21001 BATT B GRIT.rvt

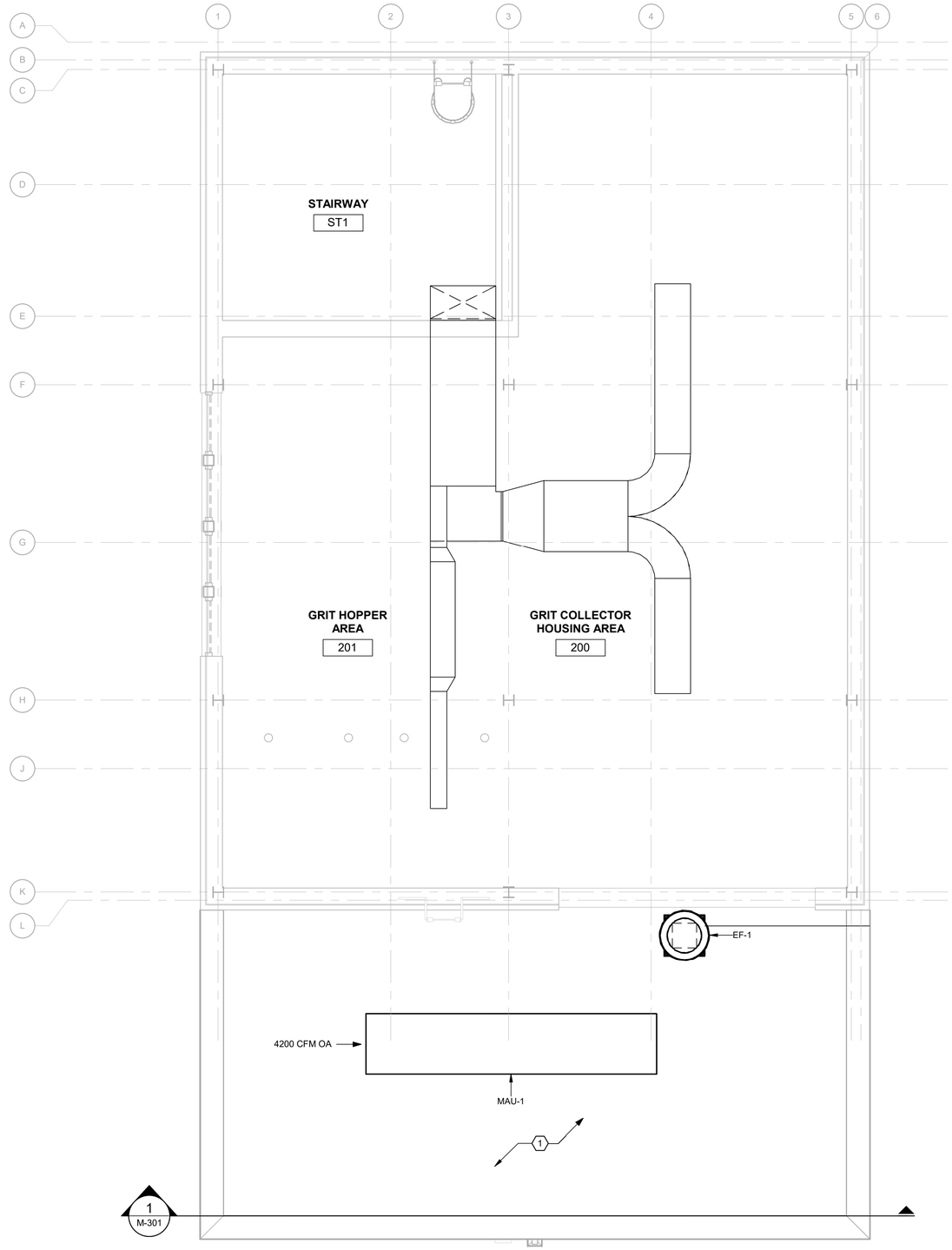

ELEVATION 742.92' MECHANICAL NEW WORK PLAN

SCALE: 1/4" = 1'-0"

KEYNOTES

1 COORDINATE LOCATION OF MECHANICAL EQUIPMENT ON DUMPSTER ADDITION ROOF SUCH THAT ALL EQUIPMENT IS AT MINIMUM 10'-0" AWAY FROM ALL ROOF EDGES.

TETRA TECH
ENGINEERING BUSINESS NO. 2429
www.tetratech.com
3497 COOLIDGE ROAD
EAST LANSING, MI 48823
TEL: (577) 316-3930 FAX: (517) 484-8140

MARK	DATE	DESCRIPTION	BY
1	06/22/21	ISSUED FOR BIDS	

CITY OF FLINT, MICHIGAN

FLINT WPC GRIT BAT "B" SYSTEM & PRIMARY TANKS IMPROVEMENT

MECHANICAL NEW WORK
ROOF PLAN - 742.92'

PROJ:	200-156238-21001
DESN:	MJG
DRWN:	JRJ
CHKD:	MJG

M-203

4' 0' 4' 8'
SCALE: 1/4" = 1'-0"

Bar measures 1 inch, otherwise drawing is not to scale

Copyright: Tetra Tech

6/21/2021 4:44:32 PM BIM 360://200-156238-21001 Flint WWTP Grit/M-156238-21001 BATT B GRIT.rvt

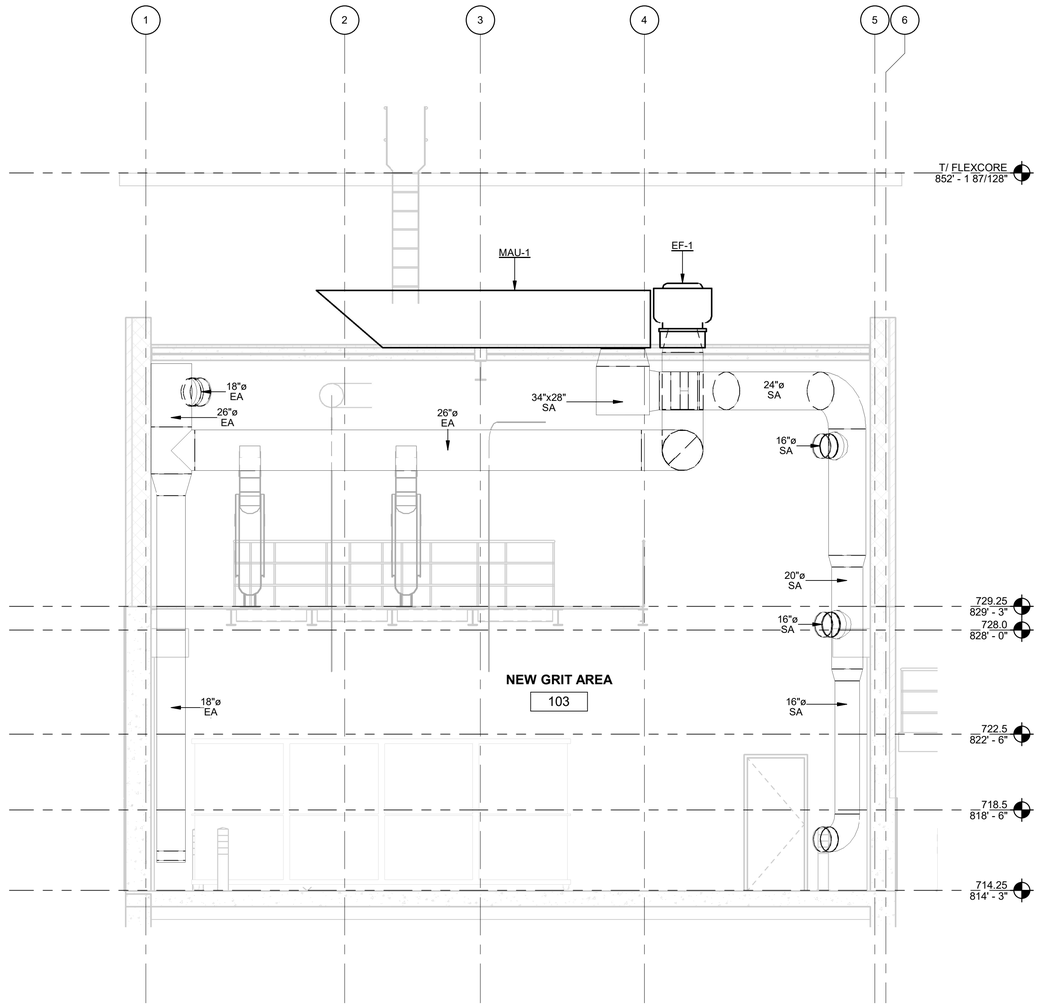

1 / M-301 DUMPSTER ADDITION SECTION

SCALE: 1/4" = 1'-0"

4' 0' 4' 8'

SCALE: 1/4" = 1'-0"

Bar measures 1 inch, otherwise drawing is not to scale

TETRA TECH
ENGINEERING BUSINESS NO. 2429
www.tetratech.com
3497 COOLIDGE ROAD
EAST LANSING, MI 48823
TEL: (577) 316-3930 FAX: (517) 484-8140

MARK	DATE	DESCRIPTION	BY
1	06/22/21	ISSUED FOR BIDS	

CITY OF FLINT, MICHIGAN

FLINT WPC GRIT BAT "B" SYSTEM & PRIMARY TANKS IMPROVEMENT

MECHANICAL SECTIONS

PROJ:	200-156238-21001
DESN:	MJG
DRWN:	JRJ
CHKD:	MJG

M-301

Copyright: Tetra Tech

6/21/2021 4:44:35 PM BIM 360://200-156238-21001 Flint WWTP Grit/M-156238-21001 BATT B GRIT.rvt

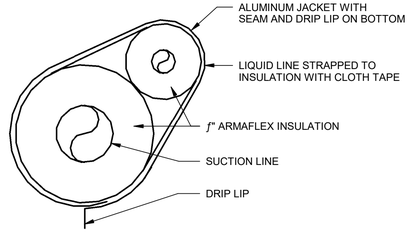

5 EXTERIOR REFRIGERANT LINE INSULATION DETAIL

SCALE: N.T.S.

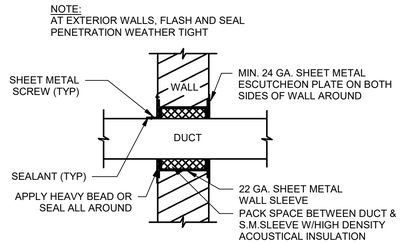

1 DUCT PENETRATION THROUGH NON-FIRE RATED WALL

SCALE: N.T.S.

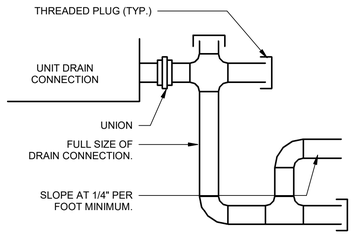

6 TYPICAL CONDENSATE DRAIN DETAIL

SCALE: N.T.S.

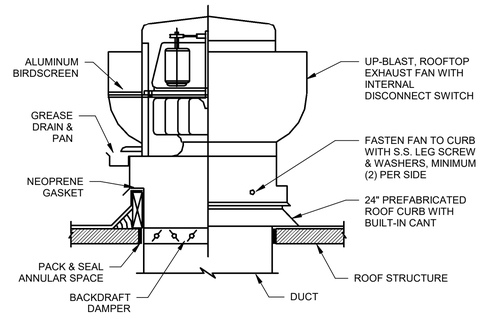

2 UPBLAST EXHAUST FAN DETAIL

SCALE: N.T.S.

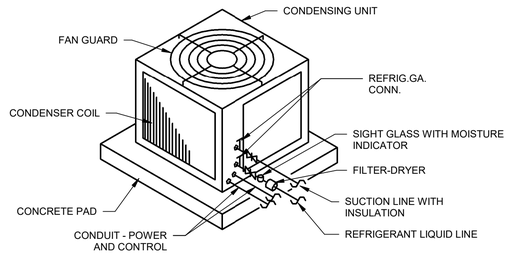

3 CONDENSING UNIT DETAIL

SCALE: N.T.S.

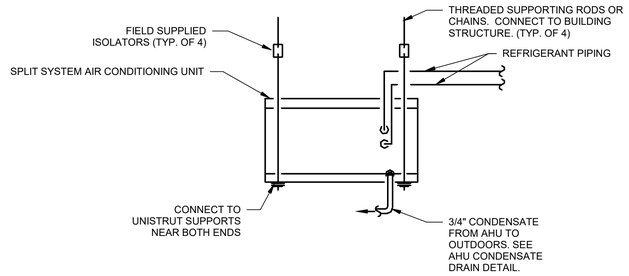

4 HORIZONTAL AIR HANDLING UNIT DETAIL

SCALE: N.T.S.

TETRA TECH
ENGINEERING BUSINESS NO. 2429
www.tetratech.com
3497 COOLIDGE ROAD
EAST LANSING, MI 48823
TEL: (577) 316-3930 FAX: (517) 484-8140

MARK	DATE	DESCRIPTION	BY
1	06/22/21	ISSUED FOR BIDS	

CITY OF FLINT, MICHIGAN

FLINT WPC GRIT BAT "B" SYSTEM & PRIMARY TANKS IMPROVEMENT

MECHANICAL DETAILS

PROJ:	200-156238-21001
DESN:	MJG
DRWN:	JRJ
CHKD:	MJG

M-501

Copyright: Tetra Tech

6/21/2021 4:44:36 PM BIM 360://200-156238-21001 Flint WWTP Grit/M-156238-21001 BATT B GRIT.rvt

Bar measures 1 inch, otherwise drawing is not to scale

MAKE UP AIR UNIT SCHEDULE

MARK	TYPE	SUPPLY AIRFLOW (CFM)	WINTER DB (°F)	INPUT (MBH)	OUTPUT (MBH)	TURN DOWN RATIO	E.S.P. (IN-WG)	T.S.P. (IN-WG)	RPM	HP	VOLTS / HZ / PH	MCA	MOP	MANUFACTURER	MODEL	WEIGHT (LBS)	NOTES
MAU-1	INDIRECT GAS FIRED	4200	-10	500.0	400.0	26.6:1	1.00	1.54	1753	2	460 / 60 / 3	5	15	GREENHECK	IGX-P116-H22-MF	1715	1

NOTES:
1. PROVIDE WITH FACTORY 24" ROOF CURB WITH DOWNWARD SUPPLY OUTLET, WEATERHOOD WITH BIRDSCREEN, AND REMOTE TEMPERATURE SUPPLY CONTROL PANEL WITH DISCHARGE TEMPERATURE CONTROL.

SPLIT SYSTEM AIR CONDITIONING UNIT SCHEDULE

MARK	ASSOCIATED EQUIPMENT	TOTAL CAP. (MBH)	SENS CAP. (MBH)	FIN TYPE	FACE VELOCITY (FPM)	NO. OF ROWS	FACE AREA (SQ FT)	REFRIG.	E.A.T. DB/WB (°F)	ELECTRIC HEATING CAPACITY (KW)	AIR FLOW (CFM)	HP	FILTER QTY.	FILTER SIZE	FILTER EFFICIENCY	VOLTS / PH / HZ	FLA	MCA	MOP	WEIGHT (LBS)	MANUFACTURER	MODEL	NOTES
AC-1	CU-1	18.5	16.5	ALUMINUM	232	3	2.44	R-407C	75 / 61	3.6	750	0.20	1	1 X 20 X 20	MERV 8	208 / 1 / 60	20	25.3	30	225	LIEBERT	MMD18ENPSN	1

NOTES:
1. PROVIDE WITH FACTORY, FIELD INSTALLED CONDENSATE PUMP, BOTTOM SUPPLY/RETURN GRILLE, WALL MOUNTED THERMOSTAT, DISCONNECT. INDOOR UNIT SHALL BE MOUNTED PER MANUFACTURER INSTALLATION REQUIREMENTS TO ALLOW SUPPLY AND RETURN THROUGH BOTTOM OF UNIT.

CONDENSING UNIT SCHEDULE

MARK	NOMINAL TONS	TOTAL CAPACITY (BTUH)	NO. OF FANS	NO. OF CIRCUITS	DESIGN AMBIENT TEMP. (°F)	VOLTS / PH / HZ	FAN HP	FLA	MCA	MOP	ASSOCIATED EQUIPMENT	WEIGHT (LBS)	MANUFACTURER	MODEL	NOTES
CU-1	1.67	20,000	1	1	95	208 / 1 / 60	0.20	12.1	14.8	25	AC-1	200	LIEBERT	PFHD20ACPLN	

FAN SCHEDULE

MARK	AIR FLOW (CFM)	S.P. (IN WG)	FAN RPM	HP	VOLTS / PH / HZ	TYPE	DRIVE	LOCATION	SERVICE	MANUFACTURER	MODEL	NOTES
EF-1	4200	1.25	1750	3	460 / 3 / 60	CENTRIFUGAL UPBLAST	DIRECT	DUMPSTER ADDITION ROOF	EXHAUST	M.K. PLASTICS	RBK-18	

NOTES:
1. PROVIDE WITH FACTORY 12" ROOF CURB, BIRDSCREEN, AND MOTORIZED DAMPER INTERLOCKED TO OPEN WITH FAN.

TETRA TECH
ENGINEERING BUSINESS NO. 2429
www.tetratech.com
3497 COOLIDGE ROAD
EAST LANSING, MI 48823
TEL: (577) 316-3930 FAX: (517) 484-8140

MARK	DATE	DESCRIPTION	BY
1	06/22/21	ISSUED FOR BIDS	

CITY OF FLINT, MICHIGAN

FLINT WPC GRIT BAT "B" SYSTEM & PRIMARY TANKS IMPROVEMENT

MECHANICAL SCHEDULES

PROJ:	200-156238-21001
DESN:	MJG
DRWN:	JRJ
CHKD:	MJG

M-601

Copyright: Tetra Tech

Bar measures 1 inch, otherwise drawing is not to scale

6/21/2021 4:44:37 PM BIM 360://200-156238-21001 Flint WWTP Grit/M-156238-21001 BATT B GRIT.rvt

PLUMBING LEGEND

- SANITARY SEWER PIPING
- COLD WATER PIPING
- HOT WATER PIPING
- HOT WATER RECIRCULATION PIPING
- VENT PIPING
- STORM PIPING
- HIDDEN / UNDERGROUND PIPING
- VENT THROUGH ROOF
- CLEAN OUT, EXPOSED
- CLEAN OUT
- DOUBLE YARD CLEANOUT
- FLOOR DRAIN
- TRAP PRIMER LINE (TPL)
- HOSE BIBB W/INTEGRAL VACUUM BREAKER (INTERIOR SURFACE) (HB)
- WALL HYDRANT W/INTEGRAL VACUUM BREAKER (EXTERIOR SURFACE) (WH)
- PIPE CAP
- PIPE CONNECTION, BOTTOM
- PIPE CONNECTION, TOP
- PIPE ELBOW, TURNED UP
- PIPE ELBOW, TURNED DOWN
- PIPE TEE
- ANCHOR, INTERMEDIATE
- BUTTERFLY VALVE
- GATE VALVE
- BALL VALVE
- CHECK VALVE
- STRAINER VALVE
- STRAINER (BLOW-OFF)
- GAS COCK/GAS STOP
- THERMOMETER
- BALANCING VALVE
- THERMOSTATIC MIXING VALVE
- SOLENOID VALVE
- RELIEF VALVE
- WATER HAMMER ARRESTER/SHOCK ABSORBER
- UNION
- PUMP (SCHEMATIC)
- WATER METER (W)
- BACK FLOW PREVENTER (BFP)
- GAS METER (M)

NOTES:

1. THIS LEGEND IS FOR REFERENCE ONLY
2. ALL SYMBOLS WHICH APPEAR WITHIN THE LEGEND MAY NOT APPLY TO THIS PROJECT.

PLUMBING ABBREVIATIONS

AFF	ABOVE FINISHED FLOOR
AFG	ABOVE FINISHED GRADE
APPROX	APPROXIMATE
BFF	BELOW FINISHED FLOOR
BFP	BACKFLOW PREVENTER
CA	COMPRESSED AIR
CAP	CAPACITY
CO	CLEAN OUT
COND	CONDENSATE
CONN	CONNECTION
CONT	CONTINUATION
D	DRAIN
DCW	DOMESTIC COLD WATER
DEG	DEGREES
DEMO	DEMOLITION
DIA	DIAMETER
DN	DOWN
DS	DOWNSPOUT
DWG	DRAWING
EA	EACH
EEW	EMERGENCY EYE/FACE WASH
ENT	ENTERING
ESS	EMERGENCY SAFETY SHOWER
ET	EXPANSION TANK
F	FAHRENHEIT
FCO	FLOOR CLEAN OUT
FD	FLOOR DRAIN
FH	FIRE HYDRANT
FM	FLOW METER
FPH	FREEZE PROOF HYDRANT
FPM	FEET PER MINUTE
GAL	GALLONS
GD	GARBAGE DISPOSAL
GM	GAS METER
GPM	GALLONS PER MINUTE
GWH	GAS WATER HEATER
HB	HOSE BIBB
HD	HEAD
HO	HUB OUTLET
HP	HORSEPOWER
HW	HOT WATER
HWR	HOT WATER RETURN
ID	INSIDE DIAMETER/DIMENSION
IE	INVERT ELEVATION
IMVB	ICE MAKER VALVE BOX
IN	INCH
IW	INDUSTRIAL WASTE
IWH	INSTANTANEOUS WATER HEATER
LAV	LAVATORY
M	METER
MAX	MAXIMUM
MEZZ	MEZZANINE
MFR	MANUFACTURER
MIN	MINIMUM
MISC	MISCELLANEOUS
N/A	NOT APPLICABLE
NG	NATURAL GAS
NPW	NON-POTABLE WATER
NTS	NOT TO SCALE
OD	OUTSIDE DIAMETER
PCV	PRESSURE CONTROL VALVE
PD	PRESSURE DROP
PG	PRESSURE GAUGE
PRV	PRESSURE REDUCING VALVE
PSI	POUNDS PER SQUARE INCH
PVC	POLYVINYL CHLORIDE
PW	POTABLE WATER
R	RADIUS
RD	ROOF DRAIN
RP	RECIRCULATION PUMP
RPBP	REDUCED PRESSURE BACKFLOW PREVENTER
RPM	REVOLUTIONS PER MINUTE
SAN	SANITARY SEWER PIPING
SK	SINK
SP	SUMP PUMP
SPEC	SPECIFICATION
STD	STANDARD
STO	STORM
SW	SERVICE WATER
TBD	TO BE DETERMINED
TCV	TEMPERING VALVE
TD	TRENCH DRAIN
TEMP	TEMPERATURE
TMV	THERMOSTATIC MIXING VALVE
TP	TRAP PRIMER
TW	TEPID WATER
TYP	TYPICAL
UR	URINAL
V	VENT
VIF	VERIFY IN FIELD
VS	VENT STACK
VTR	VENT THRU ROOF
WB	WASHER BOX
WC	WATER CLOSET
WCO	WALL CLEAN OUT
WG	WATER GAUGE
WPD	WATER PRESSURE DROP
Ø	DIAMETER

SYMBOLS AND TAGS

- SK - # — FIXTURE TAG
- LIMIT OF DEMOLITION
- CONNECT TO EXISTING
- (#) — KEYNOTE
- 3/4"ø HW — PIPE SIZE AND SYSTEM TAG
- AREA OUT OF SCOPE
- AREA OF DEMOLITION

GENERAL PLUMBING NOTES

1. ALL EQUIPMENT AND PIPING SHALL BE INSTALLED IN COMPLIANCE WITH THE LATEST APPLICABLE EDITION OF THE INTERNATIONAL PLUMBING CODE, LOCAL UTILITIES, AND APPLICABLE PROVISIONS OF THE INTERNATIONAL FUEL GAS CODE (IFGC).
2. WATER LINES SHALL NOT BE ROUTED ABOVE ANY ELECTRICAL ROOM OR ELECTRICAL PANELS OR TELEPHONE ROOMS.
3. THE CONTRACTOR IS RESPONSIBLE FOR COORDINATION WITH OTHER TRADES TO MINIMIZE SPATIAL CONFLICTS.
4. INSTALL BOTTOM OF ALL EXTERIOR WALL HYDRANTS AT 24" ABOVE FINISH GRADE ELEVATION.
5. CONTRACTOR SHALL VERIFY ALL FIELD CONDITIONS AND DIMENSIONS BEFORE CONSTRUCTION BEGINS, INCLUDING SEWER, DRAIN, AND CONDUIT INV. ELEV. CONTACT CONTRACTING OFFICER SHOULD DISCREPANCIES OCCUR.

NATURAL GAS PIPING NOTES

1. ALL NEW EXPOSED GAS PIPING SHALL BE PRIMED AND PAINTED. ALL NEW GAS PIPING WITHIN FINISHED SPACES SHALL BE PAINTED YELLOW AND LABELED IN ACCORDANCE WITH APPLICABLE CODE. ALL EXISTING UNPAINTED GAS PIPING IS TO REMAIN UNPAINTED.
2. ALL GAS PIPING SHALL BE LABELED AT BEGINNING, ALL ENDS, AND AT 6' INTERVALS DESIGNATING GAS & PRESSURE. LABELS SHALL BE PER SPECIFICATIONS.
3. PROVIDE/INSTALL THROUGH WALL PIPE PENETRATIONS AS REQUIRED WHERE PIPE ENTERS BUILDING. SLEEVE AND SEAL.

TETRA TECH
ENGINEERING BUSINESS NO. 2429
www.tetratech.com
3497 COOLIDGE ROAD
EAST LANSING, MI 48823
TEL: (577) 316-3930 FAX: (517) 484-8140

MARK	DATE	DESCRIPTION	BY
1	06/22/21	ISSUED FOR BIDS	

CITY OF FLINT, MICHIGAN

FLINT WPC GRIT BAT "B" SYSTEM & PRIMARY TANKS IMPROVEMENT

ABBREVIATIONS, LEGENDS, AND GENERAL NOTES

PROJ:	200-156238-21001
DESN:	JRJ
DRWN:	JRJ
CHKD:	MJG

P-001

Copyright: Tetra Tech

Bar measures 1 inch, otherwise drawing is not to scale

6/21/2021 4:44:38 PM BIM 360://200-156238-21001 Flint WWTP Grit\M-156238-21001 BATT B GRIT.rvt

KEYNOTES

1. DEMOLISH EXISTING PROCESS WATER PIPING AND INTERIOR HOSE BIBB IN EXISTING DUMPSTER ROOM ELEVATION 714.25' FROM BELOW DUMPSTER ROOM SLAB UP TO HOSE BIBB ON ELEVATION 729.25'.
2. DEMOLISH SERVICE WATER PIPING IN EXISTING DUMPSTER ROOM ELEVATION 714.25' FROM BELOW DUMPSTER ROOM SLAB UP TO EQUIPMENT CONNECTION AT ELEVATION 729.25'. CUT AND CAP SERVICE WATER PIPING BELOW DUMPSTER ROOM SLAB.
3. DEMOLISH EXISTING NATURAL GAS PRESSURE REDUCING VALVE AND ALL ASSOCIATED VALVES, ACCESSORIES, SUPPORTS AND HANGERS. DEMOLISH EXISTING 2" PIPING DOWNSTREAM FROM PRV.
4. DEMOLISH EXISTING FLOOR DRAINS AND SANITARY PIPING SERVING THE CURRENT DUMPSTER ROOM ELEVATION 714.25'. INFILL AND PATCH DUMPSTER SLAB PENETRATIONS TO BE AIR AND WATER TIGHT. CUT AND CAP SANITARY PIPING BELOW DUMPSTER ROOM SLAB.

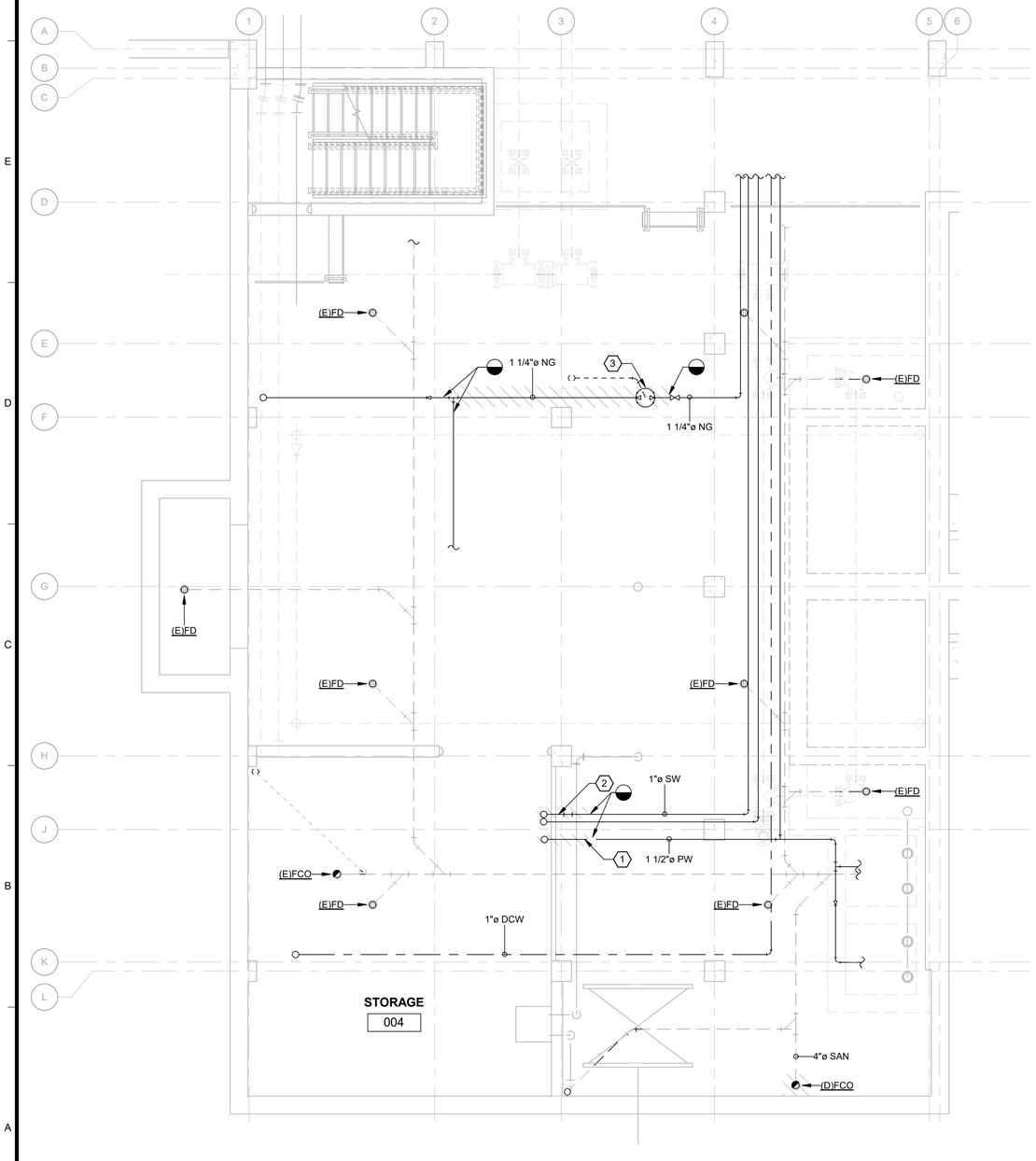

ELEVATION 702.25' PLUMBING DEMOLITION PLAN

SCALE: 1/4" = 1'-0"

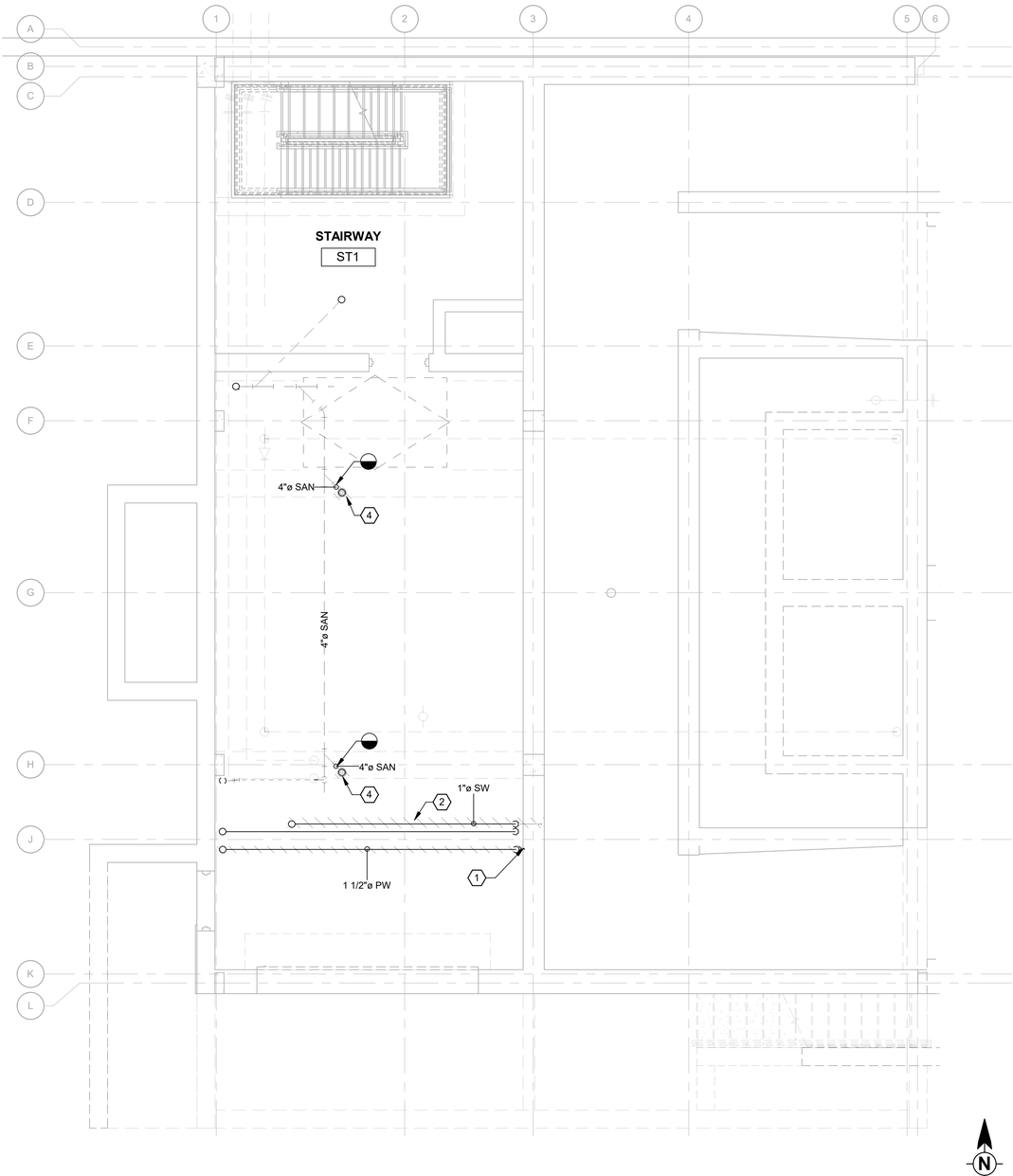

ELEVATION 714.25' PLUMBING DEMOLITION PLAN

SCALE: 1/4" = 1'-0"

4' 0' 4' 8'

SCALE: 1/4" = 1'-0"

TETRA TECH
ENGINEERING BUSINESS NO. 2429
www.tetratech.com
3497 COOLIDGE ROAD
EAST LANSING, MI 48823
TEL: (577) 316-3930 FAX: (517) 484-8140

MARK	DATE	DESCRIPTION	BY
1	06/22/21	ISSUED FOR BIDS	

CITY OF FLINT, MICHIGAN

FLINT WPC GRIT BAT "B" SYSTEM & PRIMARY TANKS IMPROVEMENT

PLUMBING DEMOLITION FLOOR PLAN - 702.25' & 714.25'

PROJ:	200-156238-21001
DESN:	JRJ
DRWN:	JRJ
CHKD:	MJG

P-101

Copyright: Tetra Tech

Bar measures 1 inch, otherwise drawing is not to scale

6/21/2021 4:44:44 PM BIM 360://200-156238-21001 Flint WWTP Grit/M-156238-21001 BATT B GRIT.rvt

KEYNOTES

1 DEMOLISH SERVICE WATER PIPING IN EXISTING DUMPSTER ROOM ELEVATION 714.25' FROM BELOW DUMPSTER ROOM SLAB UP TO EQUIPMENT CONNECTION AT ELEVATION 729.25'. CUT AND CAP SERVICE WATER PIPING BELOW DUMPSTER ROOM SLAB.

2 DEMOLISH EXISTING PROCESS WATER PIPING AND INTERIOR HOSE BIBB IN EXISTING DUMPSTER ROOM ELEVATION 714.25' FROM BELOW DUMPSTER ROOM SLAB UP TO HOSE BIBB ON ELEVATION 729.25'.

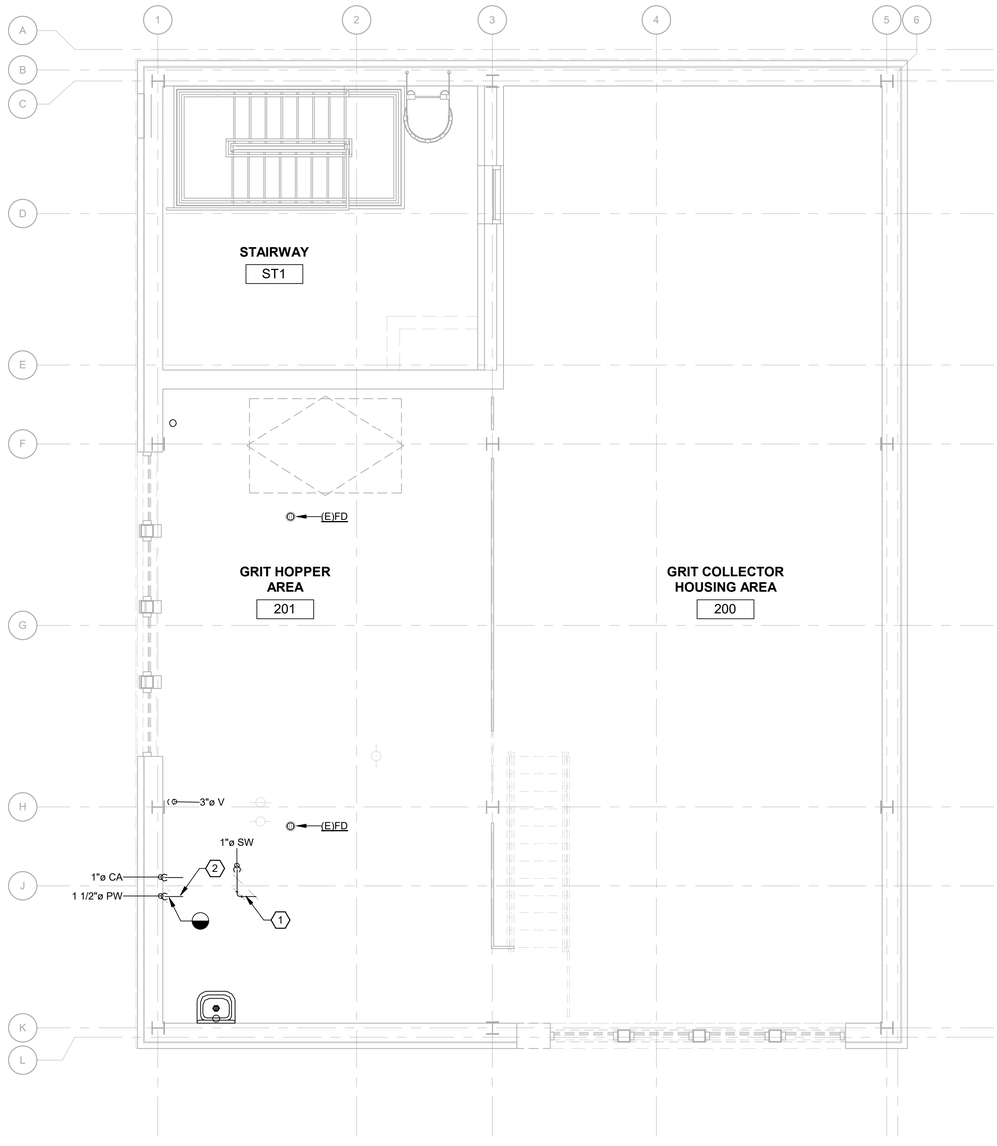

ELEVATION 729.25' PLUMBING DEMOLITION PLAN

SCALE: 1/4" = 1'-0"

TETRA TECH
ENGINEERING BUSINESS NO. 2429
www.tetratech.com
3497 COOLIDGE ROAD
EAST LANSING, MI 48823
TEL: (577) 316-3930 FAX: (517) 484-8140

MARK	DATE	DESCRIPTION	BY
1	06/22/21	ISSUED FOR BIDS	

CITY OF FLINT, MICHIGAN

FLINT WPC GRIT BAT "B" SYSTEM & PRIMARY TANKS IMPROVEMENT

PLUMBING DEMOLITION FLOOR PLAN - 729.25'

PROJ:	200-156238-21001
DESN:	JRJ
DRWN:	JRJ
CHKD:	MJG

P-102

SCALE: 1/4" = 1'-0"

Bar measures 1 inch, otherwise drawing is not to scale

Copyright: Tetra Tech

6/21/2021 4:44:47 PM BIM 360://200-156238-21001 Flint WWTP Grit\M-156238-21001 BATT B GRIT.rvt

KEYNOTES

1. ROUTE NEW SANITARY PIPING FROM TRENCH DRAINS TO EXISTING SANITARY PIPING AT FLOOR CLEANOUT ON ELEVATION 702.25'.
2. PROVIDE NEW NATURAL GAS PRESSURE REDUCING VALVE IN BASEMENT ELEVATION 702.25'. ROUTE NEW 3" NATURAL GAS PIPING TO CONNECT TO EXISTING NATURAL GAS PIPING SERVING OTHER MECHANICAL EQUIPMENT. CONNECT NEW PRV VENT TO EXISTING 1-1/2" VENT PIPING.
3. PROVIDE NEW PROCESS WATER PIPING FROM BELOW ELECTRICAL ROOM SLAB ELEVATION 714.25' UP TO EXISTING INTERIOR HOSE BIBB ON ELEVATION 729.25'. ROUTE PIPING OUTSIDE OF ELECTRICAL ROOM IN COORIDNATION WITH EXISTING PROCESS PIPING AND EQUIPMENT.

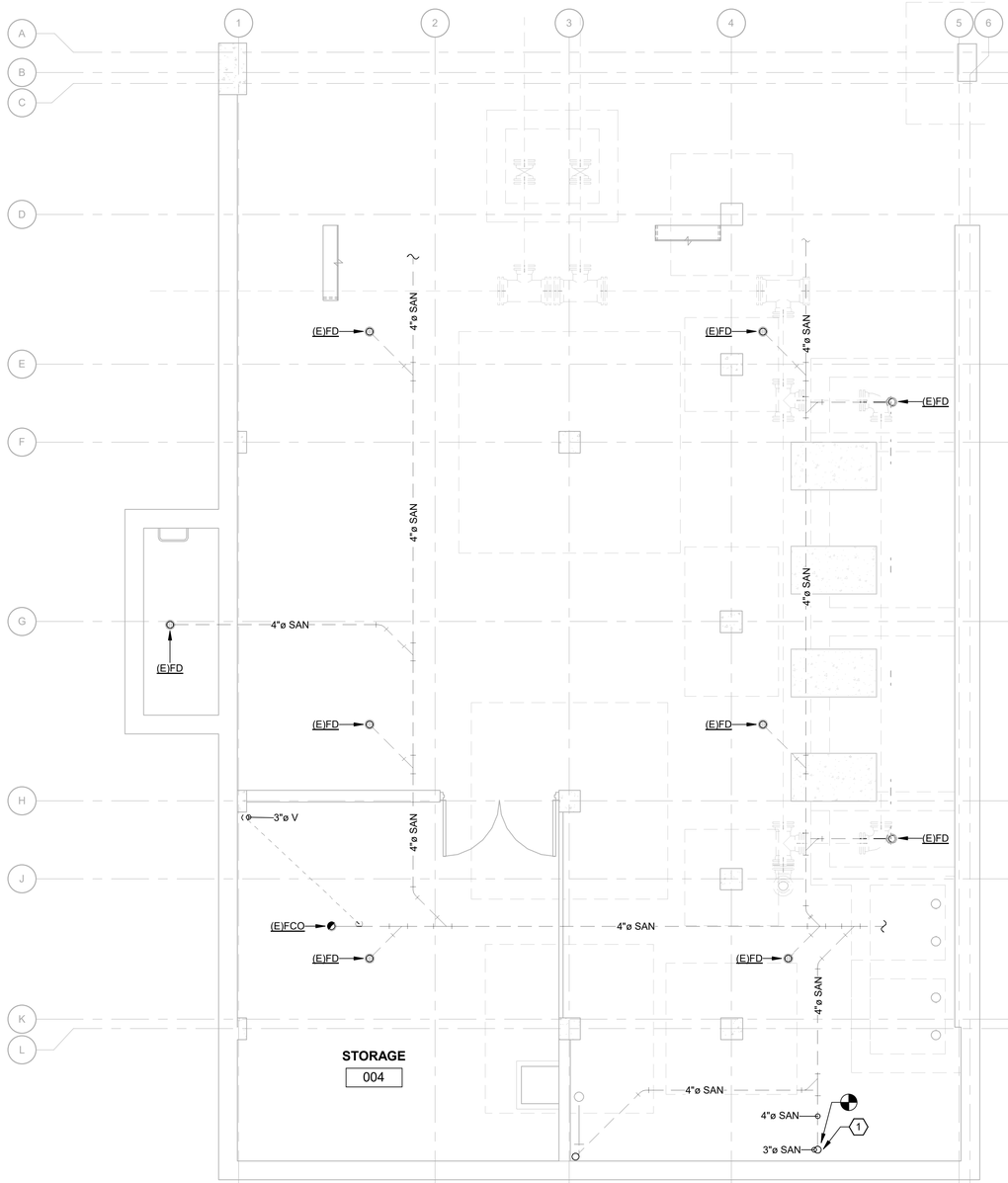

ELEVATION 702.25' PLUMBING NEW WORK PLAN - BELOW GRADE

SCALE: 1/4" = 1'-0"

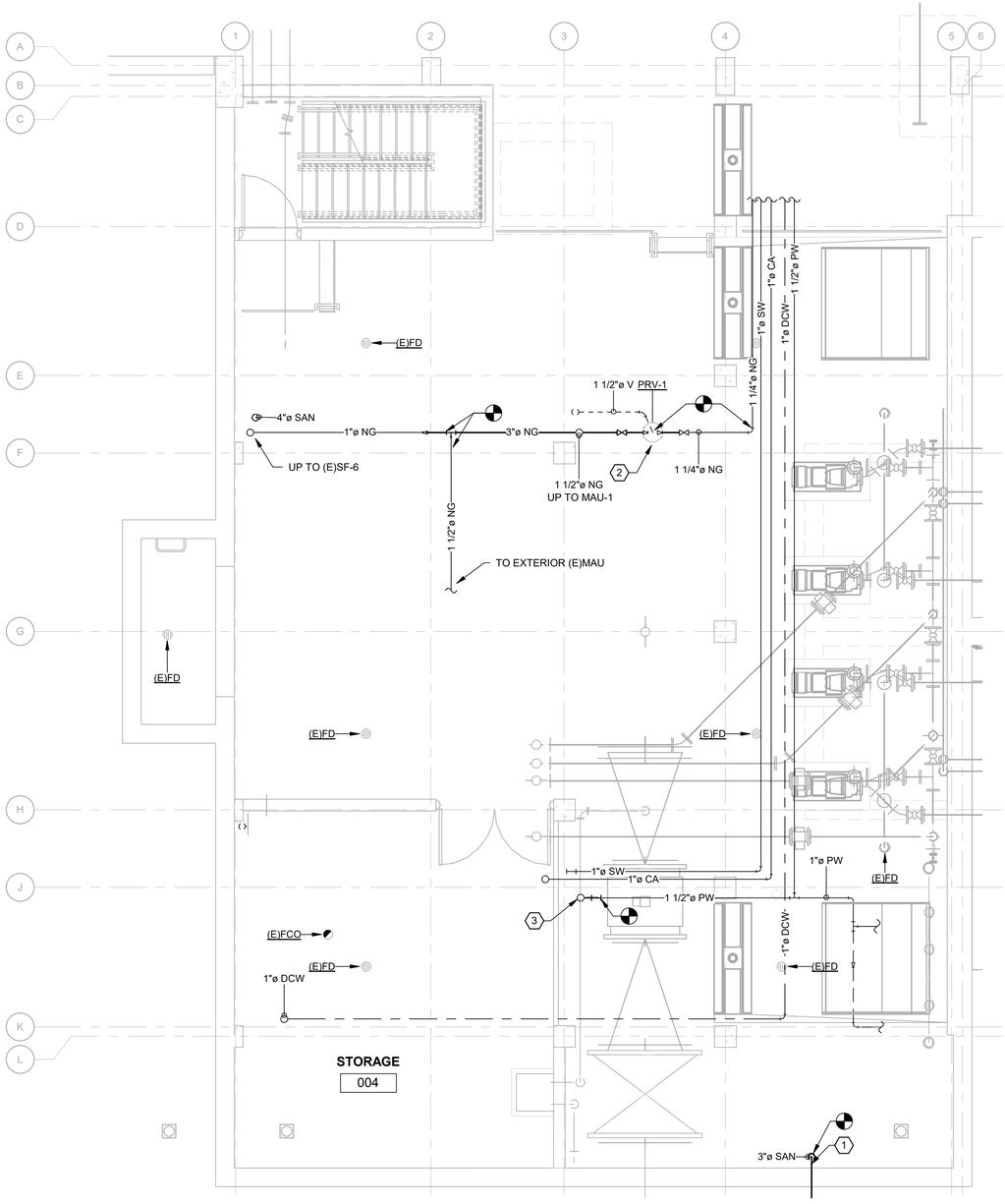

ELEVATION 702.25' PLUMBING NEW WORK PLAN - ABOVE GRADE

SCALE: 1/4" = 1'-0"

SCALE: 1/4" = 1'-0"

Bar measures 1 inch, otherwise drawing is not to scale

TETRA TECH
ENGINEERING BUSINESS NO. 2429
www.tetratech.com
3497 COOLIDGE ROAD
EAST LANSING, MI 48823
TEL: (577) 316-3930 FAX: (517) 484-8140

MARK	DATE	DESCRIPTION	BY
1	06/22/21	ISSUED FOR BIDS	

CITY OF FLINT, MICHIGAN

FLINT WPC GRIT BAT "B" SYSTEM & PRIMARY TANKS IMPROVEMENT

PLUMBING NEW WORK FLOOR PLAN - 702.25'

PROJ:	200-156238-21001
DESN:	JRJ
DRWN:	JRJ
CHKD:	MJG

P-201

Copyright: Tetra Tech

6/21/2021 4:44:53 PM BIM 360://200-156238-21001 Flint WWTP Grit\M-156238-21001 BATT B GRIT.rvt

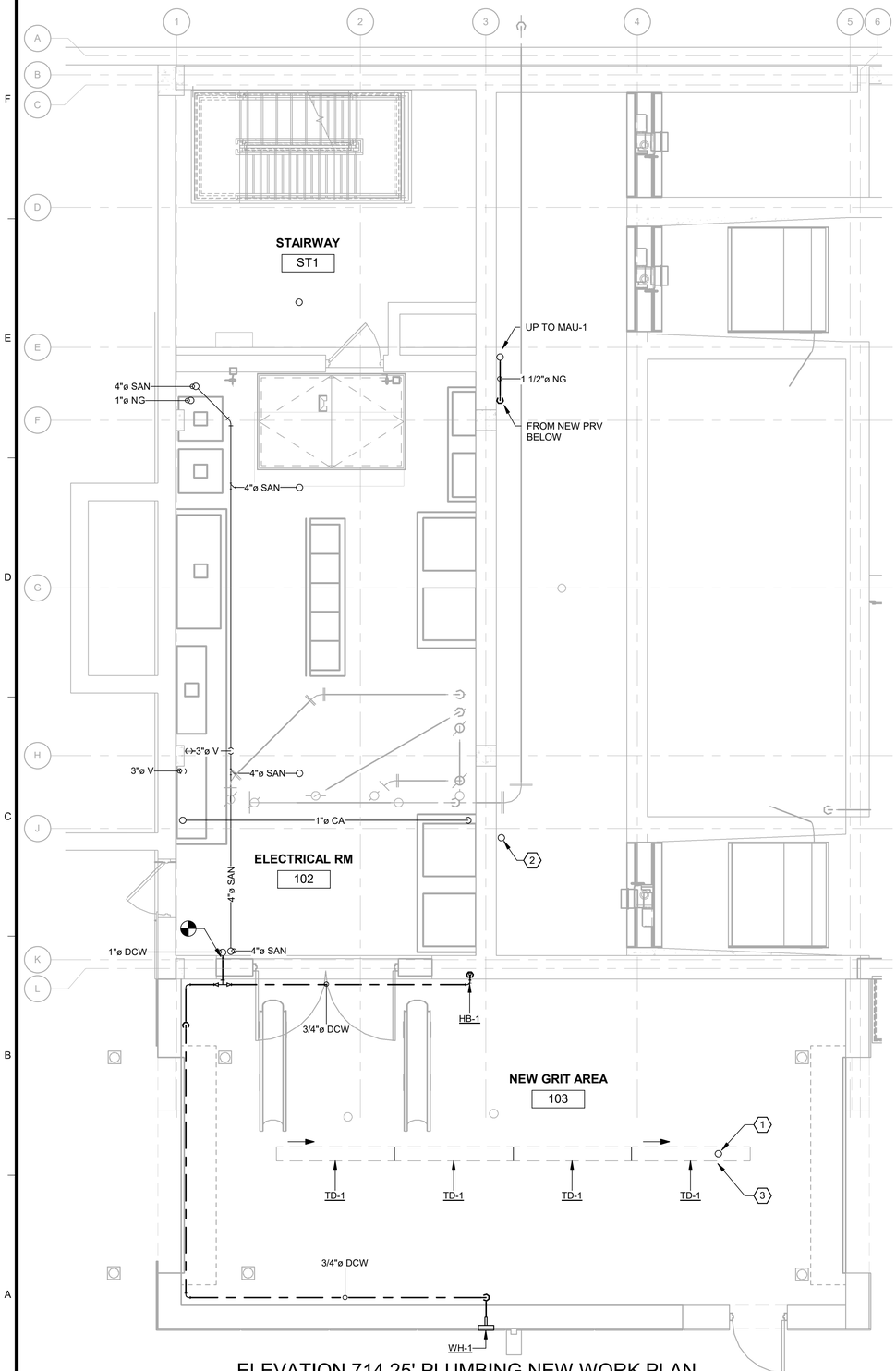

ELEVATION 714.25' PLUMBING NEW WORK PLAN

SCALE: 1/4" = 1'-0"

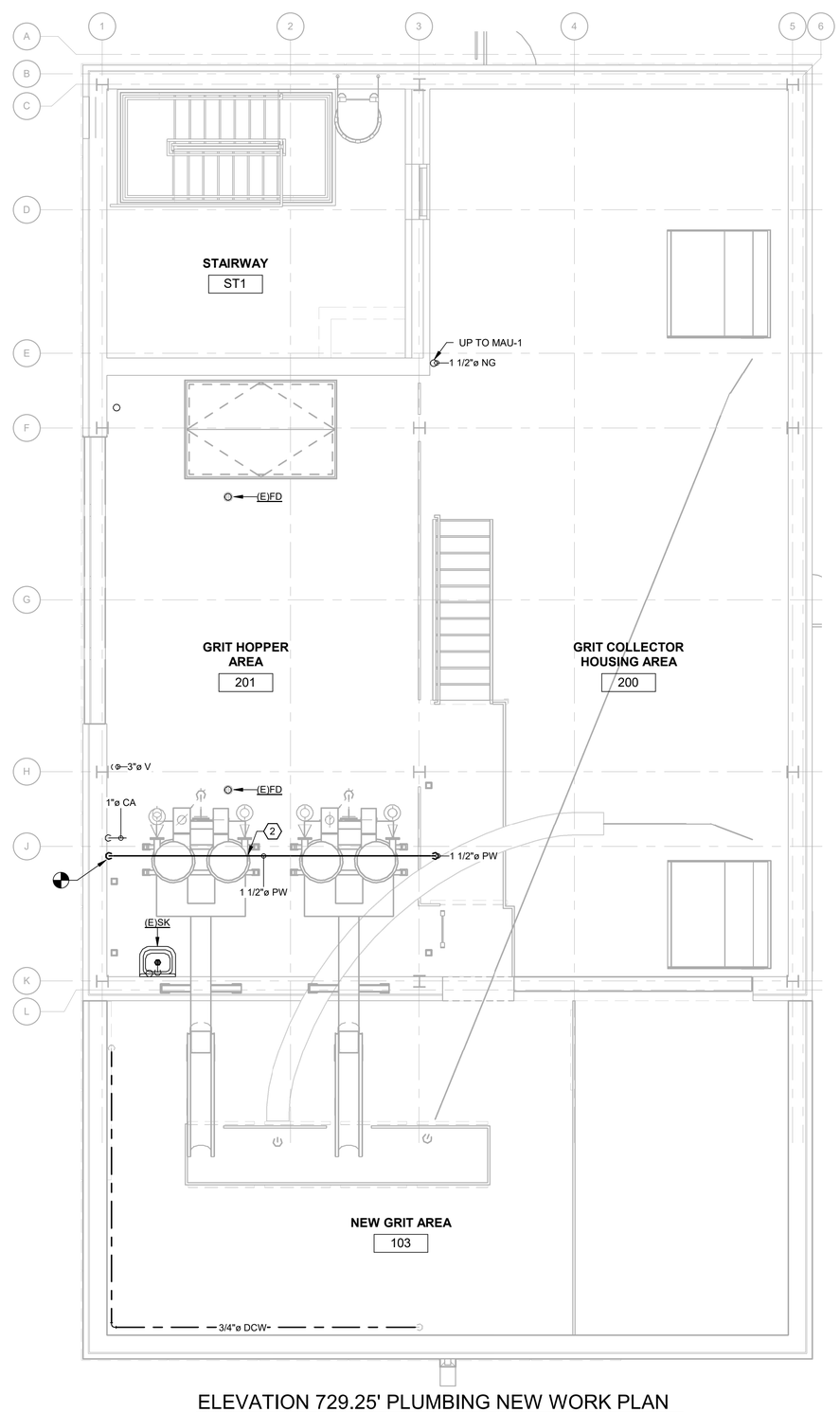

ELEVATION 729.25' PLUMBING NEW WORK PLAN

SCALE: 1/4" = 1'-0"

KEYNOTES

1. ROUTE NEW SANITARY PIPING FROM TRENCH DRAINS TO EXISTING SANITARY PIPING AT FLOOR CLEANOUT ON ELEVATION 702.25'.
2. PROVIDE NEW PROCESS WATER PIPING FROM BELOW ELECTRICAL ROOM SLAB ELEVATION 714.25' UP TO EXISTING INTERIOR HOSE BIBB ON ELEVATION 729.25'. ROUTE PIPING OUTSIDE OF ELECTRICAL ROOM IN COORIDNATION WITH EXISTING PROCESS PIPING AND EQUIPMENT.
3. PROVIDE NEW TRENCH DRAIN SYSTEM FOR DUMPSTER ADDITION AREA. TRENCH DRAIN SHALL START WITH MODEL 8601 AND SLOPE SEQUENTIALLY TO MODEL 8604 AS SHOWN ON PLANS. TRENCH DRAIN SHALL BE PROVIDED WITH NO HUB BOTTOM OUTLET.

TETRA TECH
ENGINEERING BUSINESS NO. 2429
www.tetratech.com
3497 COOLIDGE ROAD
EAST LANSING, MI 48823
TEL: (577) 316-3930 FAX: (517) 484-8140

MARK	DATE	DESCRIPTION
1	06/22/21	ISSUED FOR BIDS

CITY OF FLINT, MICHIGAN

FLINT WPC GRIT BAT "B" SYSTEM & PRIMARY TANKS IMPROVEMENT

PLUMBING NEW WORK FLOOR PLAN - 714.25' & 729.25'

PROJ:	200-156238-21001
DESN:	JRJ
DRWN:	JRJ
CHKD:	MJG

P-202

4' 0' 4' 8'

SCALE: 1/4" = 1'-0"

Bar measures 1 inch, otherwise drawing is not to scale

Copyright: Tetra Tech

6/21/2021 4:44:59 PM BIM 360://200-156238-21001 Flint WWTP Grit/M-156238-21001 BATT B GRIT.rvt

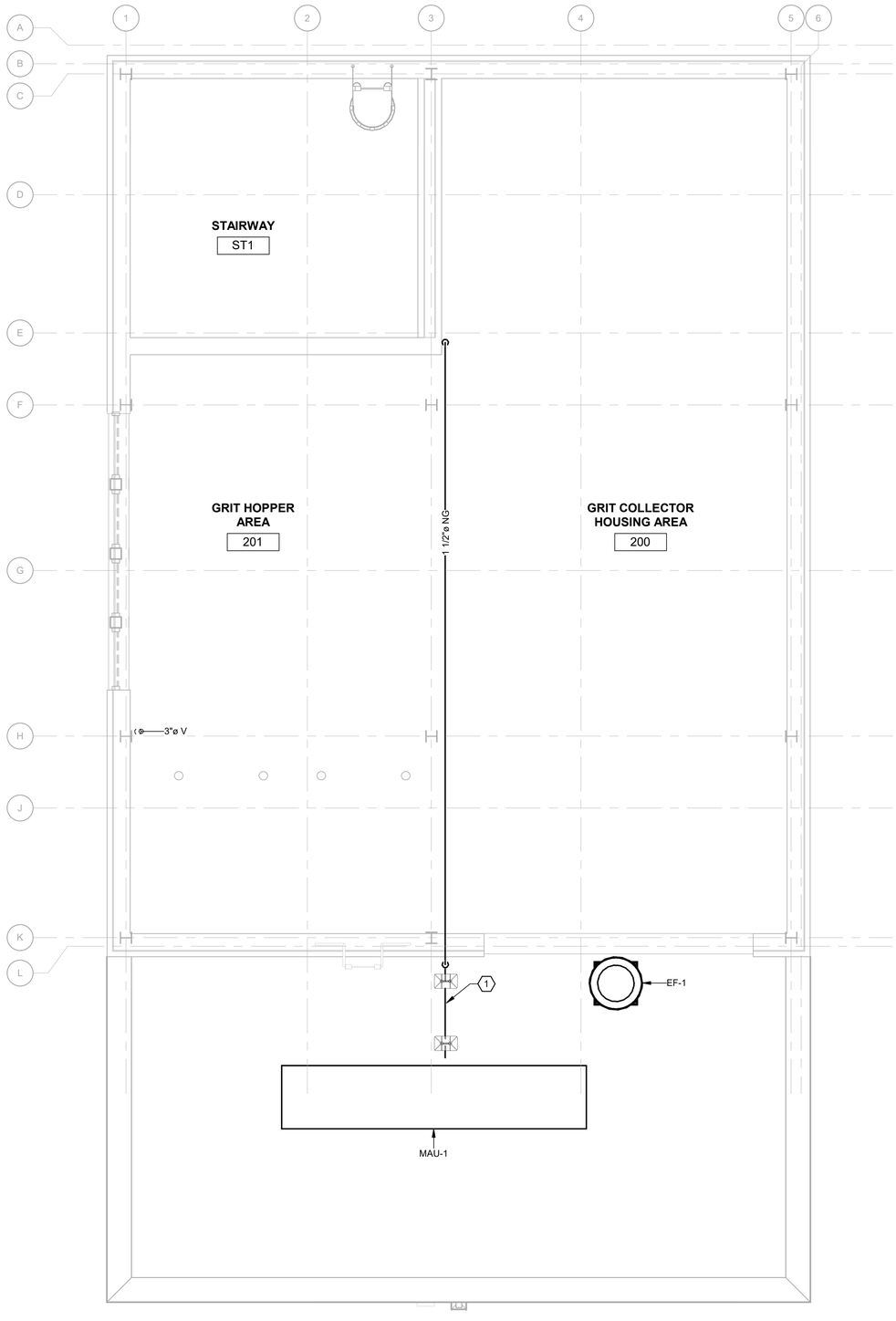

ELEVATION 742.92' PLUMBING NEW WORK PLAN

SCALE: 1/4" = 1'-0"

KEYNOTES

1 ROUTE NEW NATURAL GAS PIPING TO NEW MAKE UP AIR UNIT ON DUMPSTER ADDITION ROOF. PIPING IS TO BE AT MINIMUM 20'-0" ABOVE FINISHED FLOOR WITHIN BUILDING. COORDINATE PIPE ROUTING WITH EXISTING DUCTWORK, STRUCTURAL STEEL, AND PROCESS PIPING AND EQUIPMENT. CONNECT TO MAKE UP AIR UNIT PER MECHANICAL DETAIL AND MANUFACTURER SPECIFICATION.

TETRA TECH
ENGINEERING BUSINESS NO. 2429
www.tetratech.com
3497 COOLIDGE ROAD
EAST LANSING, MI 48823
TEL: (577) 316-3930 FAX: (517) 484-8140

MARK	DATE	DESCRIPTION	BY
1	06/22/21	ISSUED FOR BIDS	

CITY OF FLINT, MICHIGAN

FLINT WPC GRIT BAT "B" SYSTEM & PRIMARY TANKS IMPROVEMENT

PLUMBING NEW WORK FLOOR PLAN - 742.92'

PROJ:	200-156238-21001
DESN:	JRJ
DRWN:	JRJ
CHKD:	MJG

P-203

4' 0' 4' 8'

SCALE: 1/4" = 1'-0"

Bar measures 1 inch, otherwise drawing is not to scale

Copyright: Tetra Tech

6/21/2021 4:45:01 PM BIM 360://200-156238-21001 Flint WWTP Grit/M-156238-21001 BATT B GRIT.rvt

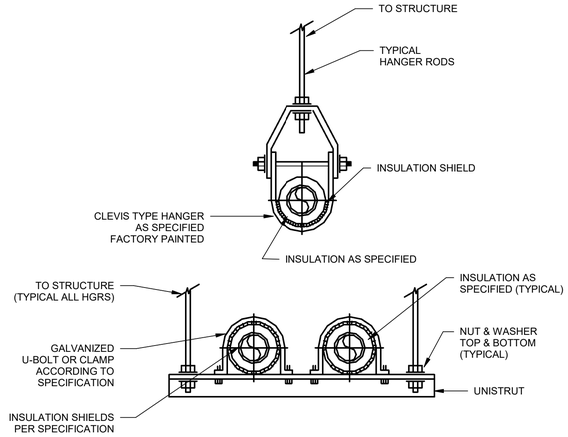

1 PIPE HANGERS - CLEVIS/TRAPEZE

SCALE: N.T.S.

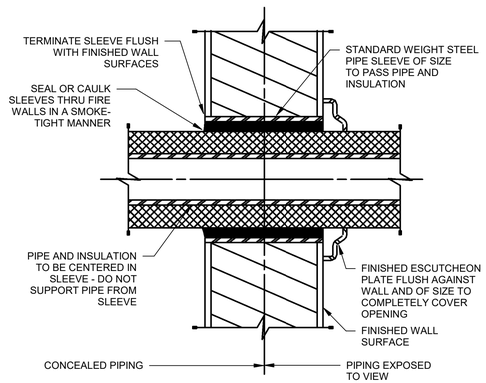

NOTE:
PROVIDE UL RATED ASSEMBLIES
FOR ALL WALLS WITH FIRE RATINGS.

2 PIPE SLEEVES THRU INTERIOR WALLS

SCALE: N.T.S.

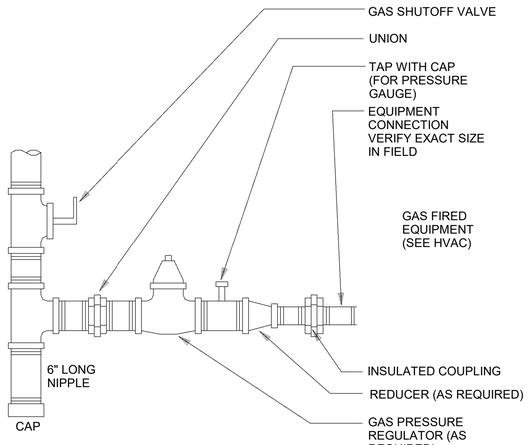

NOTE:
PRIME & PAINT ALL PIPING TO MATCH NEAREST STRUCTURE. ARCHITECT TO
APPROVE. LABEL AT 6'-0" O.C.

3 GAS FIRED EQUIPMENT CONNECTION DETAIL

SCALE: N.T.S.

PLUMBING FIXTURE SCHEDULE

TAG	DESCRIPTION	MANUFACTURER	MODEL	CONNECTIONS (IN)			
				DCW	HW	WASTE	VENT
HB-1	INTERIOR HOSE BIBB W/ VACUUM BREAKER	ZURN	195XL-VB	3/4"	-	-	-
TD-1	HEAVY DUTY TRENCH DRAIN W/ GRATE	ZURN	Z886-HD-BDE	-	-	3"	-
WH-1	EXTERIOR NON-FREEZE WALL HYDRANT	ZURN	Z-1305	3/4"	-	-	-

TETRA TECH
ENGINEERING BUSINESS NO. 2429
www.tetratech.com
3497 COOLIDGE ROAD
EAST LANSING, MI 48823
TEL: (577) 316-3930 FAX: (517) 484-8140

MARK	DATE	DESCRIPTION	BY
1	06/22/21	ISSUED FOR BIDS	

CITY OF FLINT, MICHIGAN

FLINT WPC GRIT BAT "B" SYSTEM & PRIMARY TANKS IMPROVEMENT

PLUMBING DETAILS AND SCHEDULES

PROJ:	200-156238-21001
DESN:	JRJ
DRWN:	JRJ
CHKD:	MJG

P-601

Copyright: Tetra Tech

6/21/2021 4:45:03 PM BIM 360://200-156238-21001 Flint WWTP Grit\M-156238-21001 BATT B GRIT.rvt

Bar measures 1 inch, otherwise drawing is not to scale

BACKGROUND PLAN AND ONE LINE SYMBOLS

SYMBOL	DESCRIPTION
	CONTROL SWITCH (SEL. OR P.B.) SEE CIRCUITS FOR SPECIFIC TYPE
F FL	SEE CIRCUITS FOR SPECIFIC TYPE FLOAT SWITCH - FLOW SWITCH
T M	TEMPERATURE - HUMIDISTAT SWITCH (SUBSCRIPT=NO. OF STAGES)
L P V	LIMIT (PROXIMITY TYPE) PRESSURE - VACUUM SWITCH
ALT	ELECTRICAL OR MECHANICAL ALTERNATOR (SEE WIRING)
OS	OVERLOAD SWITCH OR DEVICE
TB	TERMINAL BOX
	SOLENOID VALVE
PC	PHOTOCELL LINE VOLTAGE
	AS NOTED (LIGHTING PANEL, CONTROL PANEL, DISTRIBUTION PANEL, ETC.) WALL MOUNTED
JB	JUNCTION BOX
	TRANSFORMER
	CONDUIT WITH CONDUIT SEAL FITTING
	CONDUIT EXPOSED
	CONDUIT CONCEALED
E	DIRECT BURIED CONDUIT
UG	DIRECT BURIED CABLE
OH	OVERHEAD LINE
DB	UNDERGROUND DUCT BANK
EDB	EXISTING UNDERGROUND DUCT BANK
1 2 3 4 5 6	CONCRETE ENCASED DUCT BANK WITH CABLE LOCATIONS, AND SPARE DUCTS AS INDICATED ON DRAWINGS
	CABLE REEL
L L L L	MULTI-STACK ALARM LIGHTS
	SELECTOR SWITCH / PUSHBUTTON. FUNCTIONS AS SHOWN IN WIRING DIAGRAMS
	LOW VOLTAGE DISCONNECT SWITCH
	LOW VOLTAGE FUSE (BELOW 600V)
	HIGH VOLTAGE FUSE (ABOVE 600V)
1 RV, 2 FVR, 3 2S,2W	ALL STARTERS SHALL BE FULL VOLTAGE, NON-REVERSING UNLESS OTHERWISE INDICATED. (FVR) FULL VOLTAGE REVERSING (RV) REDUCED VOLTAGE (2S, 2W) TWO SPEED, TWO WINDING
	600V, 3 POLE MOLDED CASE CIRCUIT BREAKER, FRAME & RATING AS SHOWN
1 2 A-3	SINGLE PHASE, FRACTIONAL HP MOTOR TO LOCATION INDICATED (SEE NOTE 2 ON STANDARD NOTE SHEET)
86	DEVICE SYMBOL WITH TYPE DEVICE
A 1	THREE PHASE LOAD WITH IDENTIFICATION

SYMBOL	DESCRIPTION
FT 10	TAG NO. (BALLOON) FOR DEVICE INDICATED
FT 10, A-3, MCP OR CP-1	FOR POWER (SEE NOTE 2 ON STANDARD NOTE SHEET) 3/4"C(2/C#18SH) CONDUIT AND WIRE RUN FROM DEVICE INDICATED TO LOCATION INDICATED
	CAPACITOR, 3 PHASE, SIZE AS INDICATED
F C	DISCONNECT SWITCH (F) = FUSED, (C) = CIRCUIT BREAKER
	MAGNETIC STARTER (BACKGROUND DRAWINGS ONLY)
SIZE 2	COMBINATION MAGNETIC STARTER FUSED UNLESS NOTED (CIRCUIT BREAKER)
LC	COMBINATION LIGHTING CONTACTOR WITH HAND-OFF-AUTO SWITCH
	MANUAL STARTER (R) = REVERSING
CP	CONTROL PANEL
1/8 UH-19	UNIT HEATER, 1/8 HORSEPOWER
	LIGHTING ARRESTOR
A-3	LOW VOLTAGE HOME RUNS 120/208V, 120/240V (SEE NOTE 2 ON STANDARD NOTE SHEET)
NEMA 4	WATERTIGHT
NEMA 4X	WATERTIGHT AND CORROSION PROOF
NEMA 7	EXPLOSION PROOF - CLASS I, DIVISION 1, GROUP D
NEMA 9	EXPLOSION PROOF - CLASS II, DIVISION 1
K	KEYLOCK
SD	SMOKE DETECTOR
E	EXIT LIGHT
	FLUORESCENT LUMINAIRE
	INCANDESCENT LUMINAIRE
	HIGH INTENSITY DISCHARGE LIGHT
EM	EMERGENCY BATTERY PACK
DS	DESK INTERCOM SET
	CAMERA
PTZ	DOME CAMERA (PAN, TILT, ZOOM)
52	DRAW OUT CIRCUIT BREAKER (ABOVE 600 VOLT)
	CIRCUIT BREAKER WITH STAB CONNECTION
(3) 50/5	CURRENT TRANSFORMER, AND RATIO (WITH NUMBER REQUIRED SHOWN)

WIRING DEVICE SCHEDULE

SYMBOL	DESCRIPTION	NEMA TYPE
	125V, 2P, DUPLEX, 3W	5-20 R
	SIMPLEX RECEPTACLE	
	QUAD RECEPTACLE	
	20A, 120/277V SWITCH	SPST

CONTROL CIRCUIT & PILOT DEVICE LEGEND

SYMBOL	DESCRIPTION
	PRESSURE ACTUATED SWITCH
	FLOW ACTUATED SWITCH
	LIMIT SWITCH - NORMALLY OPEN
	LIMIT SWITCH - NORMALLY CLOSED - HELD OPEN
	LATCHING CABLE SWITCH
	MOMENTARY PUSHBUTTON OPERATOR-NORMALLY CLOSED
	MOMENTARY PUSHBUTTON OPERATOR-NORMALLY OPEN
	CONTROL RELAY CONTACT - NORMALLY OPEN
INST.	TIMING RELAY INSTANTANEOUS CONTACT
CR	CONTROL RELAY COIL
CR L, CR U	TWO COIL LATCHING RELAY
	TIMED CLOSED CONTACT ON ENERGIZATION
	TIMED OPEN CONTACT ON DE-ENERGIZATION
	ZERO SPEED OR ANTI-PLUGGING SWITCH
	MAINTAINED STOP-START PUSHBUTTON OPERATOR
	MAINTAINED PUSH - PULL OPERATOR
	LOCAL TERMINALS WITH EXTERNAL WIRING
T	TIMING RELAY COIL
T 1	TIMING RELAY COIL (OFF DELAY)
G	INDICATING LIGHT
	PUSH-TO-TEST INDICATING LIGHT
X1 X2	SECONDARY TRANSFORMER
	MOLDED CASE CIRCUIT BREAKER
	GENERAL DISCONNECT SWITCH

SYMBOL	DESCRIPTION
	SELECTOR SWITCH - NORMALLY OPEN
	FLOAT ACTUATED SWITCH
	TEMP. ACTUATED SWITCH
	LIMIT SWITCH - NORMALLY CLOSED
	LIMIT SWITCH - NORMALLY OPEN - HELD CLOSED
	TIME DELAY FUSE
	PUSHBUTTON OPERATOR WITH MUSHROOM HEAD
(F)	FIELD LOCATED STOP BUTTON
	CONTROL RELAY CONTACT - NORMALLY CLOSED
INST.	TIMING RELAY INSTANTANEOUS CONTACT
O, H, C	SELECTOR SWITCH OPERATOR WITH FUNCTION SHOWN
	TIMED OPEN CONTACT ON ENERGIZATION
	TIMED CLOSED CONTACT ON DE-ENERGIZATION
R 1	PUSH-TO-TEST INDICATING LIGHT
	MAINTAINED STOP - MOMENTARY START PUSHBUTTON (JOG)
	SOLENOID OR CLUTCH
ETI	ELAPSED TIME INDICATOR
X1 X2	120VAC TRANSFORMER
	PUSHBUTTON OPERATOR WITH MUSHROOM HEAD
	THERMAL OVERLOAD
(F)	FIELD LOCATED
	TERMINAL POINT
	TERMINAL
	LOW VOLTAGE FUSE
	FUSIBLE TERMINAL BLOCK
	CONTROL POWER TRANSFORMER
	RECEPTACLE

NOTE: THE PLC I/O ADDRESS SHALL BE USED AS THE WIRING TAG SCHEME FOR ALL PANEL AND FIELD CONTROL WIRING. COORDINATE WITH INSTRUMENTATION EQUIPMENT SUPPLIER.

I.S.A. STANDARD LETTER FUNCTIONS

SYMBOL	FIRST LETTER	SUCCEEDING LETTERS
A	ANALYSIS, ANALOG	ALARM
B	BURNER, FLAME	BATCH
C	CONDUCTIVITY, COMMAND	CONTROL (FEEDBACK TYPE)
D	DENSITY, SPECIFIC GRAVITY	
E	VOLTAGE	PRIMARY ELEMENT
F	FLOW RATE	RATIO
G	GAGING	GLASS
H	HAND, MANUAL	HIGH
I	CURRENT	INDICATE
J	POWER	SCAN
K	TIME, TIME SCHEDULE	CONTROL (NO FEEDBACK)
L	LEVEL, LIGHT	LOW
M	MOISTURE, HUMIDITY	MIDDLE, MODULATE
N		
O	OVERLOAD	ORIFICE
P	PRESSURE, VACUUM	POINT
Q	QUANTITY	TOTALIZE, INTEGRATE
R	RADIOACTIVITY	RECORD, PRINT, RECEIVE
S	SPEED, FREQUENCY, SOLENOID	SWITCH
T	TEMPERATURE, TURBIDITY	TRANSMIT, TRANSFORM
U	MULTIVARIABLE	MULTIFUNCTION
V	VIBRATION, VISCOSITY	VALVE, DAMPER, LOUVER
W	WEIGHT, FORCE	
X		
Y		RELAY, COMPUTE
Z	POSITION	DRIVE, ACTUATE

PROTECTIVE RELAY LEGEND

DEVICE NO.	DESCRIPTION
2	SYNC. TIMER 0-5 MIN.
25	SYNCHRONIZING
27	SHORT TIME UNDERVOLTAGE
32	REVERSE POWER RELAY
38	TEMPERATURE
40	LOSS OF EXCITATION
43	SELECTOR SWITCH
47	PHASE SEQUENCE & UNDERVOLTAGE
49	THERMAL
50/51	INSTANTANEOUS AND VERY INVERSE
51	VERY INVERSE
51G	INVERSE GROUND FAULT
51N	NEUTRAL OVERCURRENT
51V	OVERCURRENT RELAY WITH VOLTAGE RESTRAINT
52/CS	CONTROL SWITCH
59	INSTANTANEOUS OVERVOLTAGE
60	VOLTAGE BALANCE
62	TIME DELAY
64	SHORT TIME LOW PICK UP OVERVOLTAGE
67	DIRECTIONAL OVERCURRENT
69	LOCKOUT CONTROL SWITCH
78	OUT OF STEP
81	OVER/UNDER FREQUENCY RELAY
83	MULTI-CONTACT AUXILIARY
86/HR	MULTI-CONTACT AUX. HAND RESET
87	DIFFERENTIAL OVERCURRENT

SYMBOL LEGEND

SYMBOL	DESCRIPTION	SYMBOL	DESCRIPTION
PT	POTENTIAL TRANSFORMER	W	WATTMETER
CT	CURRENT TRANSFORMER	AP	ALARM POINT
A	AMMETER	CPT	CONTROL POWER TRANSFORMER
V	VOLTMETER	(2) (3)	NUMBER OF DEVICES REQUIRED
PF	POWER FACTOR METER	ETI	ELAPSED TIME METER

TETRA TECH
www.tetratech.com
3497 COOLIDGE ROAD
EAST LANSING, MI. 48823
PHONE: (517)316.3963 FAX: (517)484.8140

MARK	DATE	DESCRIPTION	BY
1	6/22/21	ISSUED FOR BIDS	

CITY OF FLINT, MICHIGAN
FLINT WPC GRIT BAT "B" SYSTEM & PRIMARY TANKS IMPROVEMENTS

ELECTRICAL LEGEND

PROJ: 200-156238-21001
DESN: GCJ
DRWN: JLS
CHKD: GCJ

E-001
OF 46

Copyright: Tetra Tech

Bar Measures 1 inch, otherwise drawing not to scale

6/21/2021 3:46:08 PM - \\TT.LOCAL\IER\PROJECTS\LANSING\IER\156238\200-156238-21001\CAD\SHEETFILES\E\E-001-ELEC-LGND.DWG - SHANK, JASON

NOTES:

1. FIELD VERIFY CONDUIT ROUTING AT THE PLANT PRIOR TO BIDS. CORE HOLES AS REQUIRED TO SUIT INSTALLATION OF THE CONDUITS SHOWN. PATCH WITH NON-SHRINK GROUT.
2. TURN OVER TO OWNER AT PROJECT COMPLETION OPERATION AND MAINTENANCE MANUALS (QUANTITY AS SPECIFIED) TO OWNER.
3. IN ADDITION TO PATCH CABLES SUPPLIED FOR THE PROJECT, FURNISH 30-10FT LONG MULTIMODE DUPLEX FIBER OPTIC PATCH CABLES (10-ST-ST, 10-ST-SC, 10-ST-LC) CONNECTORS, AND 30-10FT CAT-5E PATCH CABLES FOR OWNERS USE. TURN OVER CABLES TO OWNER.
4. MULTIMODE FIBER OPTIC PATCH CABLES, AND ETHERNET PATCH CABLES SUPPLIED IN THE PROJECT SHALL BE COLORED PURPLE.
5. FIBER OPTIC PATCH PANELS SHALL BE THE PRODUCT OF CORNING CABLE SYSTEMS. (RACK OR SURFACE MOUNTED AS SHOWN", ST STYLE CONNECTORS, WITH QUANTITY OF BULKHEADS AS SHOWN.

GENERAL CONSTRUCTION NOTES:

1. ELECTRICAL MATERIALS AND EQUIPMENT ITEMS SHOWN IN LIGHT LINE WEIGHTS ON THE DRAWINGS ARE EXISTING ITEMS TO REMAIN. ELECTRICAL MATERIALS AND EQUIPMENT ITEMS SHOWN IN HEAVY LINE WEIGHTS ARE NEW THIS CONTRACT.
2. ITEMS SHOWN OR NOTED TO BE DEMOLISHED ON THE DRAWINGS ARE EXISTING ITEMS TO BE REMOVED FROM SITE BY CONTRACTOR UNLESS NOTED TO BE TURNED OVER TO OWNER.
3. FOR ITEMS INDICATED AS "FIELD LOCATE", THE CONTRACTOR SHALL FIELD VERIFY FOR INTERFERENCE AND FOR LOCATIONS OF MOUNTING FLANGES, CONNECTION POINTS, ETC.
4. CONDUIT ROUTINGS SHOWN ON BACKGROUND PLANS ARE INTENDED ROUTINGS ONLY. EXACT CONDUIT ROUTINGS FOR CONDUITS, AND LENGTH SHALL BE FIELD LOCATED AND VERIFIED BY THE CONTRACTOR. COORDINATE CONDUIT ROUTING IN FINISHED AREAS WITH OWNER. CONDUIT TO BE CONCEALED IN THESE AREAS.
5. REFER TO THE CABLE MANUFACTURER'S RECOMMENDATIONS FOR MINIMUM BEND RADIUS FOR FIBER OPTIC CABLES. INSTALL NEW PULL BOXES (PB) AS REQUIRED FOR CONDUITS. SIZE PULL BOXES AS REQUIRED PER FIBER OPTIC CABLE MANUFACTURERS RECOMMENDATIONS.
6. CONDUITS/RACEWAYS, PULL BOXES AND JUNCTION BOXES TO BE INSTALLED WITH 316 STAINLESS STEEL CHANNEL STRUT. MINIMUM STRUT LENGTH TO BE 12 INCHES, WHERE POSSIBLE.
7. PANELS SHALL BE MOUNTED OFF WALLS WITH STRUT, CONDUITS SHALL BE MOUNTED ON STRUT INCLUDING SINGLE RUNS.
8. REPAIR SIDEWALKS AND ROADWAYS DUE TO SITE WORK ADDITIONS, THE EXTENT OF THE REPAIR REQUIRED SHALL BE FIELD VERIFIED PRIOR TO BIDS IN CONJUNCTION WITH THE WORK SHOWN IN THE CONTRACT DOCUMENTS. PRIOR TO TRENCHING, FIELD LOCATE EXISTING GAS LINES, TELEPHONE LINES, SPRINKLER LINES, ETC. COORDINATE WITH OWNER
9. PULL CORDS SHALL BE INSTALLED IN CONDUITS CONTAINING NETWORK CABLES, AND FIBER OPTIC CABLES.
10. CORE HOLES AS REQUIRED TO SUIT INSTALLATION OF CONDUIT AND WIRING/CABLING AS SHOWN. FIELD VERIFY EXACT EXTENT OF WORK REQUIRED.
11. FURNISH PULL BOXES FOR FIBER OPTIC CABLE. COORDINATE EXACT BENDING RADIUS WITH MANUFACTURER.
12. NEW CONDUITS INSTALLED THIS CONTRACT WITH FIBER OPTIC CABLES ARE TO BE LABELED WITH PHENOLIC TAGS (AT BEGINNING TO END) TO INDICATE THE NUMBER OF STRANDS, ORIGINATION AND DESTINATION. TAGS TO BE COLOR CODED ORANGE FOR MULTIMODE.
13. WHERE NEW CONDUITS SHOWN TO BE INSTALLED PASS UNDER ROADWAYS, CONDUITS SHALL BE CONCRETE ENCASED.
14. PRIOR TO EXCAVATION, FIELD LOCATE EXISTING UTILITIES. COORDINATE WITH OWNER.
15. AREAS WHERE CAMERAS ARE SHOWN TO BE INSTALLED SHALL BE CLASSIFIED AS NEMA 4, UNLESS CALLED OUT OTHERWISE.
16. THE ASSOCIATED INSTRUMENTATION DRAWINGS SHOW EXISTING WIRES AND TERMINAL NUMBERS REQUIRED TO PROPERLY INTERFACE WITH NEW EQUIPMENT. THIS INFORMATION WAS COLLECTED FROM AS-BUILT DRAWINGS AND EXTENSIVE FIELD VERIFICATION. THE INFORMATION SHALL BE USED AS A GUIDE IN RE-TERMINATION. IT SHALL REMAIN THE CONTRACTOR'S RESPONSIBILITY TO EXAMINE THE WIRING AND TO REVISE TO SUIT AS REQUIRED. CHANGES IN THE CONTRACT OR COST WILL NOT BE GRANTED FOR THIS COORDINATION. IT IS THE CONTRACTOR'S RESPONSIBILITY TO EXAMINE PROPOSED WORK SHOWN.
17. CONDUIT ROUTINGS SHOWN ON BACKGROUND PLANS ARE PROPOSED ROUTINGS ONLY. EXACT CONDUIT ROUTINGS AND LENGTH SHALL BE FIELD LOCATED AND VERIFIED BY THE CONTRACTOR. COORDINATE CONDUIT ROUTING IN FINISHED AREAS WITH OWNER. CONDUIT TO BE CONCEALED IN THESE AREAS.
18. RACEWAYS, PULL BOXES AND JUNCTION BOXES TO BE INSTALLED WITH 316 STAINLESS STEEL FASTENERS SUPPORTS, AND THREADED ROD, ETC. (CHANNEL STRUT TO ALSO BE STAINLESS STEEL). MINIMUM STRUT LENGTH TO BE 12 INCHES, WHERE POSSIBLE. TYPICAL FOR NEMA 12, 4, AND 7 AREAS.
19. WIRING FOR STARTERS SHALL BE IN ACCORDANCE WITH NEMA CLASS II B STANDARDS. SUBMIT ENGINEERED SHOP DRAWINGS FOR ALL STARTERS SHOWN TO BE WIRED.
20. WIRE NUMBERS (1, 3, 5, ETC.) SHALL BE PREFIXED WITH STARTER TAG NUMBERS. THE WIRE NUMBER AFTER THE PREFIX SHALL BE THE MANUFACTURER'S WIRE NUMBERING SYSTEM. WIRE MARKERS SHALL BE USED AT EACH WIRE TERMINATION POINT.
21. IN AREAS WHERE EQUIPMENT AND CONDUIT IS REMOVED, REPAIR WALL AND FLOOR SURFACES AS REQUIRED TO MATCH SURROUNDING AREA. WHERE DEVICES ARE REMOVED FROM CONCEALED BOXES, FURNISH AND INSTALL A BLANK COVER ON THE BOX.
22. FIBER OPTIC CABLE SHALL BE AS CALLED OUT ON SYSTEM CONFIGURATION DRAWINGS, MULTI MODE, ALL DIELECTRIC, SUITABLE FOR INSTALLATION UNDERGROUND IN WET CONDUIT.

GENERAL NOTES:

1. PRIOR TO SUBMITTING A BID FOR THE WORK DETAILED UNDER THIS CONTRACT, BIDDER SHALL VISIT THE FLINT WCP (WASTEWATER TREATMENT PLANT). THE BIDDER SHALL FULLY ACQUAINT ONESELF WITH EXISTING FIELD CONDITIONS AT EACH SITE. NO BULLETINS WILL BE WRITTEN FOR WORK DUE TO LACK OF VERIFICATION OF EXISTING SITE CONDITIONS AND WIRING.
2. NO WIRES SHALL BE TERMINATED TO TERMINAL STRIPS, OR OTHER EQUIPMENT WITHOUT FIRST VERIFYING SIGNAL TYPE. DAMAGES RESULTING FROM LACK OF VERIFICATION SHALL BE BORNE BY THE CONTRACTOR. CONTRACTOR SHALL COORDINATE SIGNAL TYPE AND VOLTAGE WITH I/O CARDS SHOWN.
3. WITHIN CONTROL PANELS, NAMEPLATES SHALL BE PROVIDED TO INDICATE DIFFERENT VOLTAGE LEVELS WITHIN PANELS. ALSO, A NAME TAG (YELLOW BACKGROUND, RED LETTERING) SHALL BE LOCATED ON THE FRONT OF EVERY PANEL INDICATING THAT WHEN MAIN PANEL IS DISCONNECTED 120V IS STILL PRESENT FROM FIELD DEVICES (YELLOW WIRING/ISOLATED INPUT CARDS.)
4. PHENOLIC TAGS ON FACE OF CONTROL PANELS TO HAVE WHITE BACKGROUND AND BLACK LETTERING (EXCEPT WARNING TAGS; YELLOW BACKGROUND RED LETTERING).
5. PROVIDE SAFETY COVERS ON ALL 480V MOLDED CASE MAIN CIRCUIT BREAKERS TO INSULATE THE INCOMING CABLES AND SIDE CONDUCTORS FROM CONTACT. (TYP. FOR CONTROL PANELS.) PROVIDE BREAKER LOCKS FOR PUMP CIRCUIT BREAKERS (MCP)AND MAIN PANEL BREAKERS.
6. REFER TO WIRING DIAGRAMS FOR ADDITIONAL INFORMATION ON ISOLATED I/O. A COMMON NEUTRAL MAY BE USED FOR SEVERAL ISOLATED INPUTS FROM THE SAME STARTER. PROVIDE NEUTRAL JUMPERS WIRES WITHIN THE PANEL AS REQUIRED.
7. ELECTRICAL MATERIALS AND EQUIPMENT ITEMS SHOWN IN LIGHT LINE WEIGHTS ON THE DRAWINGS ARE EXISTING ITEMS TO REMAIN. ELECTRICAL MATERIALS AND EQUIPMENT ITEMS SHOWN IN HEAVY LINE WEIGHTS ARE NEW THIS CONTRACT.
8. ITEMS SHOWN CROSSHATCHED (OR NOTED TO BE DEMOLISHED) ON THE DRAWINGS ARE EXISTING ITEMS TO BE REMOVED, FROM SITE BY CONTRACTOR.
9. INSTALL A SINGLE CONDUCTOR INSULATED (RHW, THWN, OR XHHW) COPPER GROUND WIRE IN EACH CONDUIT, SIZE AS SHOWN ON DRAWINGS, OR AS A MINIMUM PER THE NATIONAL ELECTRICAL CODE. THIS GROUND WIRE SHALL BE CONNECTED AT EACH END TO THE EQUIPMENT GROUND. THIS ALSO INCLUDES INSTRUMENTATION DEVICES SUCH AS LEVEL, PRESSURE, FLOW TRANSMITTERS, LIMIT SWITCHES, CONDUITS, NETWORK AND I/O CABLES.
10. THE FOLLOWING EXAMPLE COMPONENT IDENTIFICATION SHALL BE USED AS APPROPRIATE:

(F) FIELD MOUNTED, NOT AT STARTER OR OTHER CONTROL PANELS
(S) STARTER PANEL MOUNTED
(MCP)AT MAIN CONTROL PANEL
(1) AT CONTROL PANEL NO.1
(2) AT CONTROL PANEL NO.2
(TCP) AT TEMPERATURE CONTROL PANEL

11. REFER TO DETAIL SHEETS. CONTRACTOR SHALL FURNISH AND INSTALL HARDWARE AND APPURTENANCES (I.E. PIPE TAPS, WETWELL BUBBLER TUBES, VALVES, COPPER TUBING, BALL VALVES, PNEUMATIC PIPING, SPOOL PIECES, ETC.) FOR FIELD DEVICES SHOWN (FLOWMETERS, PRESSURE TRANSMITTERS, LEVEL TRANSMITTERS, ETC.). WORK SHALL BE COORDINATED WITH OTHER TRADES (MECHANICAL INSTRUMENTATION, ETC.) CONTRACTOR SHALL BE RESPONSIBLE FOR SYSTEM COORDINATION AND INSTALLATION.
12. ETHERNET AND FIBER OPTIC TERMINATIONS SHALL BE PERFORMED BY A QUALIFIED REPRESENTATIVE OF CABLE MANUFACTURER, THE CABLES SHALL BE TESTED. NO SPLICING SHALL BE PERMITTED OF FIBER OPTIC CABLES, BETWEEN PANELS. FIBERS SHALL BE TERMINATED AT PATCH PANELS, INCLUDING SPARES.
13. REFER TO THE CABLE MANUFACTURER'S RECOMMENDATIONS FOR MINIMUM BEND RADIUS FOR FIBER OPTIC CABLES. INSTALL NEW PULL BOXES (PB) AS REQUIRED FOR CONDUITS. SIZE PULLBOXES AS REQUIRED PER FIBER OPTIC CABLE MANUFACTURERS RECOMMENDATIONS..
14. CABLES (INCLUDING FIBER, ETHERNET, CONTROL WIRE, ETC.) WHERE PASSING THROUGH A PULLBOX SHALL BE LABELED AND COMPLETELY IDENTIFIED WITH IDENTIFICATION NUMBERS AND ORIGINATION/DESTINATION. THIS ALSO INCLUDES ALL CABLE BUNDLES ENTERING CONTROL PANELS, PULLBOXES, ETC.
15. CONTROL WIRES SHALL BE TAGGED WITH THE PLC I/O ADDRESS, AND A DESCRIPTIVE ADDRESS IN THE FIELD AND AT THE PANEL. REFER TO INSTRUMENTATION DRAWINGS, CONTROL PANEL WIRING DIAGRAMS. (TYP.)
16. THE FIELD DEVICES SHOWN ON THE P&ID'S, ELECTRICAL BACKGROUNDS, AND DETAILS SHEETS MAKEUP THE FIELD DEVICE EQUIPMENT REQUIREMENTS. NOT ALL FIELD DEVICES REQUIRED ARE SHOWN ON THE P&ID'S.
17. UPS SELECTED SHALL BE COMPATIBLE WITH ISOLATION TRANSFORMERS. (TYP.)
18. REFER TO I/O DRAWING LAYOUT FOR ADDITIONAL SIGNALS NOT SHOWN ON P&ID FLOW DIAGRAMS.
19. FURNISH, AND INSTALL PHENOLIC NAMETAGS ON THE EXTERIOR OF CONDUITS CONTAINING E-FO, F.O., E-NET CABLES. NAMETAGS TO BE INSTALLED ON EACH CONDUIT AT EACH END, BETWEEN ENCLOSURES ORANGE BACKGROUND, WHITE LETTERING. FOR MULTIMODE FIBER, YELLOW BACKGROUND, WHITE LETTERING, SINGLE MODE FIBER. EXAMPLE: "24 - E-FO - BPP TO BIOP-4".
20. CONTROL WIRING TO BE YELLOW COLOR. (TYP.)
21. CONDUITS IN NEMA 4 AREAS INDOORS TO BE ALUMINUM, OR PVC COATED RGS.
22. WIRES FOR SEPARATELY DERIVED POWER SOURCES TO BE ORANGE. COORDINATE WITH OWNER.
23. ENCLOSURES, PULL BOXES, JUNCTION BOXES, SHALL BE 316 STAINLESS STEEL, OR RATED EXPLOSION PROOF (NEMA 7) AS SHOWN ON DRAWINGS.
24. FURNISH AND INSTALL PHENOLIC NAMETAGS ON THE EXTERIOR OF ALL NEW CONDUITS (THIS PROJECT) CONTAINING E-FO, F.O., E-NET, POWER, SIGNAL, CONTROL WIRES/CABLES. NAMETAGS TO BE INSTALLED ON EACH CONDUIT AT EACH END, BETWEEN ENCLOSURES ORANGE BACKGROUND, WHITE LETTERING, FOR MULITMODE FIBER, YELLOW BACKGROUND, WHITE LETTERING, SINGLEMODE FIBER, EXAMPLE: "24 - E-FO TFPP TO FPP-1". FOR POWER: "480V POWER FROM MCC-S TO MCC-B1". FOR CONTROL: "CONTROL WIRES - TO BPP". FOR SIGNAL: "SIGNAL WIRES - TO BPP".

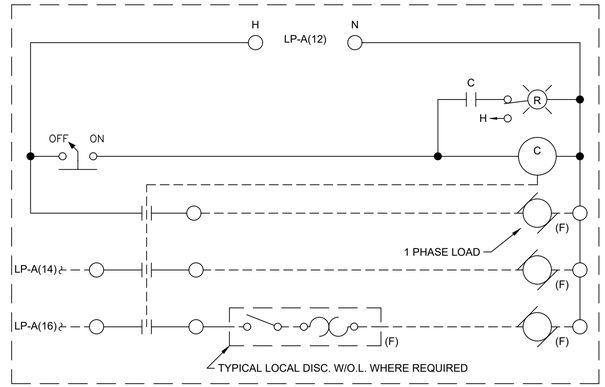

TYPICAL 120V 3 POLE CONTACTOR

(EXAMPLE CIRCUIT)

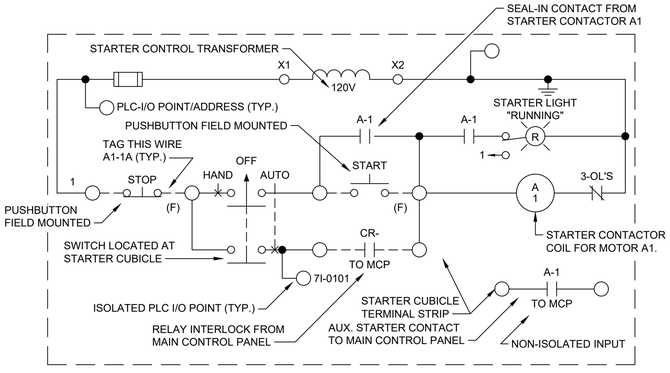

A 1 EXAMPLE PUMP — STARTER NAMEPLATE

(TAG A1)
(EXAMPLE CIRCUIT)

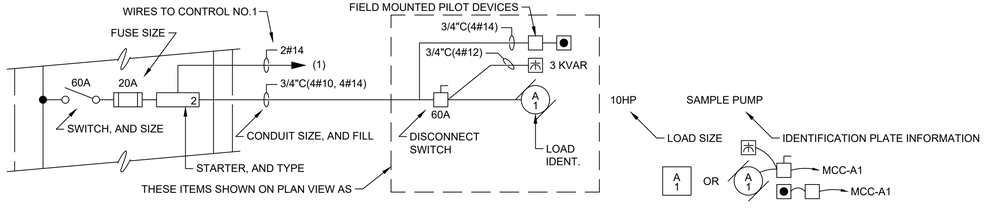

MCC LEGEND EXAMPLE

TETRA TECH
www.tetratech.com
3497 COOLIDGE ROAD
EAST LANSING, MI. 48823
PHONE: (517)316.3963 FAX: (517)484.8140

MARK	DATE	DESCRIPTION	BY
1	6/22/21	ISSUED FOR BIDS	

CITY OF FLINT, MICHIGAN

FLINT WPC GRIT BAT "B" SYSTEM & PRIMARY TANKS IMPROVEMENTS

ELECTRICAL LEGEND, NOTES

PROJ:	200-156238-21001
DESN:	GCJ
DRWN:	JLS
CHKD:	GCJ

E-002

OF 46

Copyright: Tetra Tech

Bar Measures 1 inch, otherwise drawing not to scale

6/21/2021 3:46:12 PM - \\TT.LOCAL\IER\PROJECTS\LANSING\IER\156238\200-156238-21001\CAD\SHEETFILES\E\E-002-ELEC-NOTE.DWG - SHANK, JASON

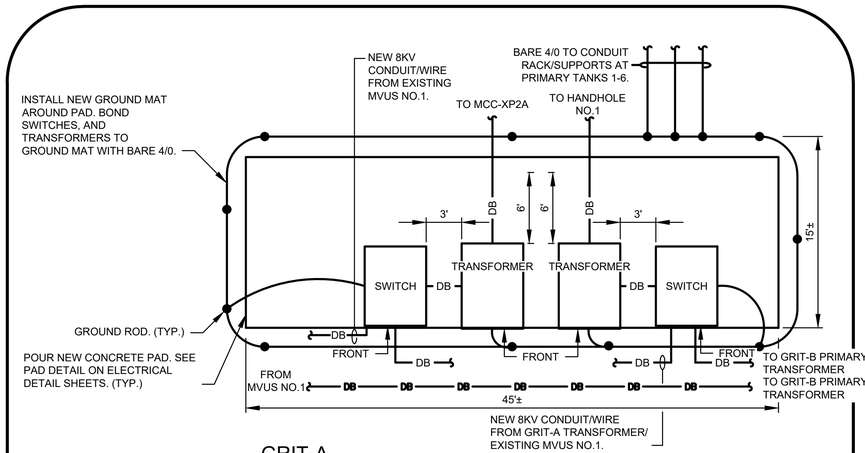

GRIT-A
MAINTENANCE BUILDING TRANSFORMERS/SWITCH PAD

NO SCALE

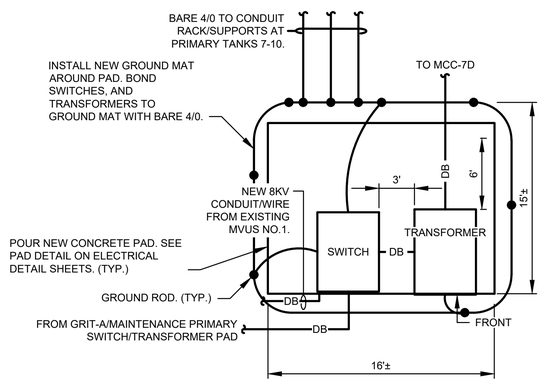

GRIT-B
MAINTENANCE BUILDING TRANSFORMERS/SWITCH PAD

NO SCALE

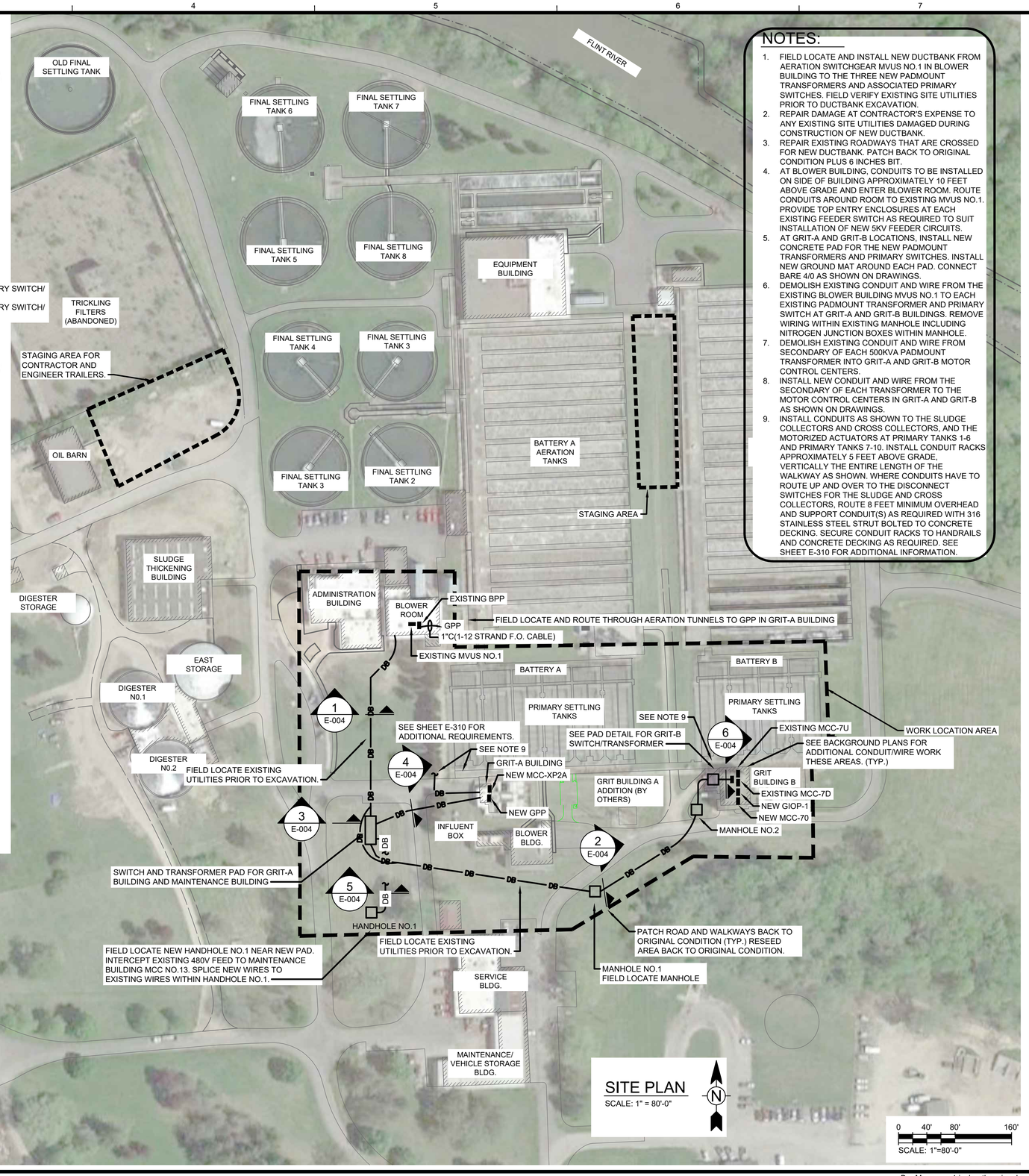

SITE PLAN

SCALE: 1" = 80'-0"

NOTES:

1. FIELD LOCATE AND INSTALL NEW DUCTBANK FROM AERATION SWITCHGEAR MVUS NO.1 IN BLOWER BUILDING TO THE THREE NEW PADMOUNT TRANSFORMERS AND ASSOCIATED PRIMARY SWITCHES. FIELD VERIFY EXISTING SITE UTILITIES PRIOR TO DUCTBANK EXCAVATION.
2. REPAIR DAMAGE AT CONTRACTOR'S EXPENSE TO ANY EXISTING SITE UTILITIES DAMAGED DURING CONSTRUCTION OF NEW DUCTBANK.
3. REPAIR EXISTING ROADWAYS THAT ARE CROSSED FOR NEW DUCTBANK. PATCH BACK TO ORIGINAL CONDITION PLUS 6 INCHES BIT.
4. AT BLOWER BUILDING, CONDUITS TO BE INSTALLED ON SIDE OF BUILDING APPROXIMATELY 10 FEET ABOVE GRADE AND ENTER BLOWER ROOM. ROUTE CONDUITS AROUND ROOM TO EXISTING MVUS NO.1. PROVIDE TOP ENTRY ENCLOSURES AT EACH EXISTING FEEDER SWITCH AS REQUIRED TO SUIT INSTALLATION OF NEW 5KV FEEDER CIRCUITS.
5. AT GRIT-A AND GRIT-B LOCATIONS, INSTALL NEW CONCRETE PAD FOR THE NEW PADMOUNT TRANSFORMERS AND PRIMARY SWITCHES. INSTALL NEW GROUND MAT AROUND EACH PAD. CONNECT BARE 4/0 AS SHOWN ON DRAWINGS.
6. DEMOLISH EXISTING CONDUIT AND WIRE FROM THE EXISTING BLOWER BUILDING MVUS NO.1 TO EACH EXISTING PADMOUNT TRANSFORMER AND PRIMARY SWITCH AT GRIT-A AND GRIT-B BUILDINGS. REMOVE WIRING WITHIN EXISTING MANHOLE INCLUDING NITROGEN JUNCTION BOXES WITHIN MANHOLE.
7. DEMOLISH EXISTING CONDUIT AND WIRE FROM SECONDARY OF EACH 500KVA PADMOUNT TRANSFORMER INTO GRIT-A AND GRIT-B MOTOR CONTROL CENTERS.
8. INSTALL NEW CONDUIT AND WIRE FROM THE SECONDARY OF EACH TRANSFORMER TO THE MOTOR CONTROL CENTERS IN GRIT-A AND GRIT-B AS SHOWN ON DRAWINGS.
9. INSTALL CONDUITS AS SHOWN TO THE SLUDGE COLLECTORS AND CROSS COLLECTORS, AND THE MOTORIZED ACTUATORS AT PRIMARY TANKS 1-6 AND PRIMARY TANKS 7-10. INSTALL CONDUIT RACKS APPROXIMATELY 5 FEET ABOVE GRADE, VERTICALLY THE ENTIRE LENGTH OF THE WALKWAY AS SHOWN. WHERE CONDUITS HAVE TO ROUTE UP AND OVER TO THE DISCONNECT SWITCHES FOR THE SLUDGE AND CROSS COLLECTORS, ROUTE 8 FEET MINIMUM OVERHEAD AND SUPPORT CONDUIT(S) AS REQUIRED WITH 316 STAINLESS STEEL STRUT BOLTED TO CONCRETE DECKING. SECURE CONDUIT RACKS TO HANDRAILS AND CONCRETE DECKING AS REQUIRED. SEE SHEET E-310 FOR ADDITIONAL INFORMATION.

TETRA TECH
www.tetratech.com
3497 COOLIDGE ROAD
EAST LANSING, MI. 48823
PHONE: (517)316.3963 FAX: (517)484.8140

MARK	DATE	DESCRIPTION	BY
1	6/22/21	ISSUED FOR BIDS	

CITY OF FLINT, MICHIGAN

FLINT WPC GRIT BAT "B" SYSTEM & PRIMARY TANKS IMPROVEMENTS

ELECTRICAL SITE PLAN PROPOSED WORK

PROJ:	200-156238-21001
DESN:	GCJ
DRWN:	JLS
CHKD:	GCJ

E-003

OF 46

Copyright: Tetra Tech

Bar Measures 1 inch, otherwise drawing not to scale

6/21/2021 3:46:21 PM - \\TT.LOCAL\ER\PROJECTS\LANSING\ER\156238\200-156238-21001\CAD\SHEETFILES\E\E-003_SITE PLAN.DWG - SHANK, JASON

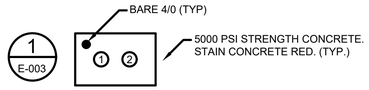

1. 5"C(3#500KCMIL, 8KV RATED, 1#4/0)
2. 5"C(3#500KCMIL, 8KV RATED, 1#4/0)

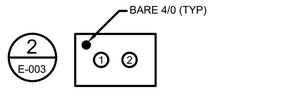

1. 5"C(3#500KCMIL, 8KV RATED, 1#4/0)
2. 5"C(3#500KCMIL, 8KV RATED, 1#4/0)

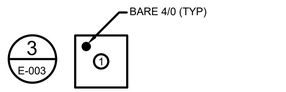

1. 5"C(3#500KCMIL, 8KV RATED, 1#4/0)

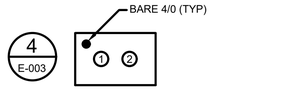

1. 5"C(3#500KCMIL, 1#4/0) - TO MCC-XP2A
2. 5"C(3#500KCMIL, 1#4/0) - TO MCC-XP2A

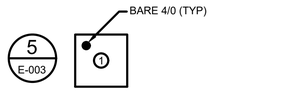

1. 5"C(3#500KCMIL, 1#4/0) TO MCC-13 IN MAINTENANCE/VEHICLE STORAGE BUILDING

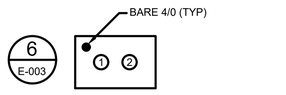

1. 5"C(3#500KCMIL, 1#4/0) - TO MCC-7D
2. 5"C(3#500KCMIL, 1#4/0) - TO MCC-7D

TETRA TECH
www.tetratech.com
3497 COOLIDGE ROAD
EAST LANSING, MI. 48823
PHONE: (517)316.3953 FAX: (517)484.8140

MARK	DATE	DESCRIPTION	BY
1	6/22/21	ISSUED FOR BIDS	

CITY OF FLINT, MICHIGAN

FLINT WPC GRIT BAT "B" SYSTEM & PRIMARY TANKS IMPROVEMENTS

ELECTRICAL

SITE PLAN PROPOSED WORK DUCT BANK SECTIONS

PROJ:	200-156238-21001
DESN:	GCJ
DRWN:	JLS
CHKD:	GCJ

E-004

OF 46

Copyright: Tetra Tech

Bar Measures 1 inch, otherwise drawing not to scale

6/21/2021 3:46:24 PM - \\TT.LOCAL\ER\PROJECTS\LANSING\ER\156238\200-156238-21001\CAD\SHEETFILES\E\E-004_SITE PLAN_DB SECTIONS.DWG - SHANK, JASON

FLINT RIVER

FLINT RIVER

FLINT RIVER

OLD FINAL SETTLING TANK

OLD FINAL SETTLING TANK

N.W. PUMPING STATION

TRICKLING FILTERS (ABANDONED)

STAGING AREA FOR CONTRACTOR AND ENGINEER TRAILERS.

OIL BARN

DEPACK BUILDING

SLUDGE THICKENING BUILDING

DIGESTER PUMP HOUSE

DIGESTER STORAGE

LOADING FACILITY

ROUTE CONDUIT DUCTBANK THIS AREA FROM MCC-XP2A AND GPP TO OTHER SIDE OF ROAD THEN ROUTE VERTICAL CONDUIT RACK EXPOSED ALONG ENTIRE LENGTH OF PRIMARY TANKS 1-6. SIMILAR FOR PRIMARY TANKS 7-10.

DEMOLSH EXISTING CONCRETE PAD, TRANSFORMERS, PRIMARY SWITCHES, CONDUIT/WIRE, ETC. (TYP.)

GAS BUILDING

FINAL SETTLING TANK 6

FINAL SETTLING TANK 7

FINAL SETTLING TANK 5

FINAL SETTLING TANK 8

EQUIPMENT BUILDING

FINAL SETTLING TANK 4

FINAL SETTLING TANK 3

FINAL SETTLING TANK 3

FINAL SETTLING TANK 2

STAGING AREA

BATTERY A AERATION TANKS

BATTERY B AERATION TANKS

ADMINISTRATION BUILDING

BLOWER ROOM

BATTERY A

BATTERY B

PRIMARY SETTLING TANKS

PRIMARY SETTLING TANKS

WORK LOCATION AREA

GRIT BUILDING A

GRIT BUILDING A ADDITION (BY OTHERS)

GRIT BUILDING B

DEMOLISH MOTORS CONDUIT/WIRE, AND CONTROL STATIONS BACK TO MCC-XP2A.

DEMOLISH MOTORS AND CONDUIT/WIRE BACK TO MCC-7D.

INFLUENT BOX

BLOWER BLDG.

SERVICE BLDG.

MAINTENANCE/ VEHICLE STORAGE BLDG.

NOTES:

1. SEE DETAILS ON SHEET E-006 AND SHEET E-007 FOR ADDITIONAL REQUIREMENTS.

SITE PLAN

SCALE: 1" = 80'-0"

0 40' 80' 160'

SCALE: 1"=80'-0"

TETRA TECH
www.tetratech.com
3497 COOLIDGE ROAD
EAST LANSING, MI. 48823
PHONE: (517)316.3963 FAX: (517)484.8140

MARK	DATE	DESCRIPTION	BY
1	6/22/21	ISSUED FOR BIDS	

CITY OF FLINT, MICHIGAN

FLINT WPC GRIT BAT "B" SYSTEM & PRIMARY TANKS IMPROVEMENTS

ELECTRICAL
SITE PLAN - DEMOLITION - PROPOSED WORK

PROJ:	200-156238-21001
DESN:	GCJ
DRWN:	JLS
CHKD:	GCJ

E-005

OF 46

Copyright: Tetra Tech

Bar Measures 1 inch, otherwise drawing not to scale

6/21/2021 3:46:35 PM - \\TT.LOCAL\IER\PROJECTS\LANSING\IER\156238\200-156238-21001\CAD\SHEETFILES\E\E-005_EX. SITE PLAN - DEMO.DWG - SHANK, JASON

REMOVE WINDOW. ROUTE CONDUITS OUT THIS AREA. ENLARGE OPENING AS REQUIRED. PATCH OPENING FOR CONDUITS WITH MORTAR. ALSO ROUTE CONDUITS IN LEVEL BELOW MCC-XP2A OUT EXTERIOR WALL BELOW GRADE.



GRIT-A PRIMARY TANKS 1-6

CONSTRUCT VERTICAL CONDUIT RACK - ENTIRE LENGTH OF WALKWAY FOR PRIMARY TANKS 1-6. RACK HEIGHT AND WIDTH AS REQUIRED. MAINTAIN SPACE IN FRONT OF EQUIPMENT AND WALKWAY AS REQUIRED. PROVIDE NEMA 7 RATED BOXES AS REQUIRED. (TYP.)



EXISTING EXTERIOR LIGHTS TO REMAIN.



GRIT-B PRIMARY TANKS

ROUTE CONDUITS OUT OF TOP AND BOTTOM OF NEW MCC-XP2A TO OUTDOORS. REWORK EXISTING CONDUITS/WIRE INTO NEW MCC-XP2A AS REQUIRED.

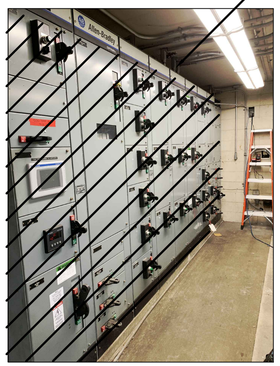

ROUTE CONDUITS OUT EACH SIDE OF EXTERIOR WALLS AND WALL BELOW GRADE AS REQUIRED. CORE HOLES AS REQUIRED. PATCH BACK WITH MORTAR.



GRIT-A PRIMARY TANKS 1-6

SEE SHEET E-314 FOR ADDITIONAL ROUTING REQUIREMENTS.

MAINTENANCE TRANSFORMER/SWITCH.

GRIT-A TRANSFORMER/SWITCH.



GRIT-A TRANSORMER/SWITCH
AND MAINTENANCE TRANSFORMER/SWITCH

INSTALL VERTICAL CONDUIT RACK THIS AREA, ENTIRE LENGTH. PROVIDE NEMA 7 RATED BOXES AS REQUIRED FOR RACEWAYS TO SUIT EQUIPMENT INSTALLATION. (TYP. PRIMARY TANKS 1-6 AND 7-10)



PRIMARY TANKS 7-10

ROUTE CONDUITS FROM NEW MCC-70 AND GIOP-1 THROUGH WALL, THEN ALONG EXTERIOR WALL THROUGH THIS YARD AREA, UP - OVER TO AREA ALONG PRIMARY TANKS 7-10. CONCRETE ENCASE CONDUITS IN YARD AREA THAT ARE DIRECT BURIED.



GRIT-B PRIMARY TANKS 7-10

NOTE: ROUTE NEW CONDUITS/RACKS ON WALL TO LOADS AT PRIMARY TANKS 7-10. FROM MCC-70 AND GIOP-1, THIS AREA. ROUTE BELOW EXISTING WINDOW.



GRIT-B BUILDING
TRANSFORMER-PRIMARY SWITCH

DEMOLISH CONDUIT/WIRE, CONTROLS, DISCONNECT SWITCHES BACK TO MCC-XP2A FOR PRIMARY TANKS 1-6 (TYP. FOR PRIMARY TANKS 7-10 AND MCC-7D, MCC-7U)



TETRA TECH
www.tetratech.com
3497 COOLIDGE ROAD
EAST LANSING, MI. 48823
PHONE: (517)316.3963 FAX: (517)484.8140

MARK	DATE	DESCRIPTION	BY
1	6/22/21	ISSUED FOR BIDS	

CITY OF FLINT, MICHIGAN

FLINT WPC GRIT BAT "B" SYSTEM & PRIMARY TANKS IMPROVEMENTS

ELECTRICAL
SITE PLAN - DEMOLITION - PROPOSED WORK

PROJ:	200-156238-21001
DESN:	GCJ
DRWN:	JLS
CHKD:	GCJ

E-006
OF 46

Copyright: Tetra Tech

Bar Measures 1 inch, otherwise drawing not to scale

6/21/2021 3:46:43 PM - \\TT.LOCAL\ER\PROJECTS\LANSING\ER\156238\200-156238-21001\CAD\SHEETFILES\E\E-006 SITE PLAN PICS DEMO.DWG - SHANK, JASON



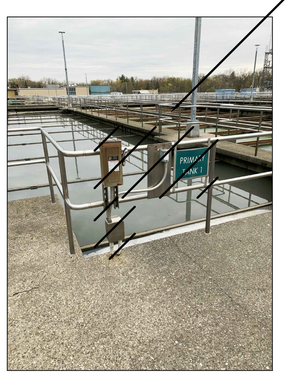

PRIMARY TANK MOTORS/EQUIPMENT DEMOLITION

TYP. FOR GRIT-A AND GRIT-B PRIMARY TANKS



GRIT-B PRIMARY SLUDGE COLLECTORS - DEMOLITION (TYP.)

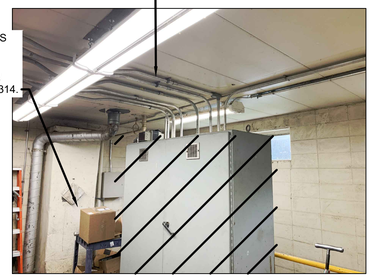



GRIT-A TRANSFORMER/SWITCH AND MAINTENANCE TRANSFORMER/SWITCH



GRIT-A TANKS 1-6

TYP. FOR GRIT-A AND GRIT-B PRIMARY TANKS



TETRA TECH
www.tetratech.com
3497 COOLIDGE ROAD
EAST LANSING, MI. 48823
PHONE: (517)316.3963 FAX: (517)484.8140

MARK	DATE	DESCRIPTION	BY
1	6/22/21	ISSUED FOR BIDS	

CITY OF FLINT, MICHIGAN

FLINT WPC GRIT BAT "B" SYSTEM & PRIMARY TANKS IMPROVEMENTS

ELECTRICAL SITE PLAN - DEMOLITION PROPOSED WORK

PROJ:	200-156238-21001
DESN:	GCJ
DRWN:	JLS
CHKD:	GCJ

E-007

OF 46

Copyright: Tetra Tech

Bar Measures 1 inch, otherwise drawing not to scale

6/21/2021 3:46:50 PM - \\TT.LOCAL\IER\PROJECTS\LANSING\IER\156238\200-156238-21001\CAD\SHEETFILES\E-007 SITE PLAN PICS DEMO.DWG - SHANK, JASON

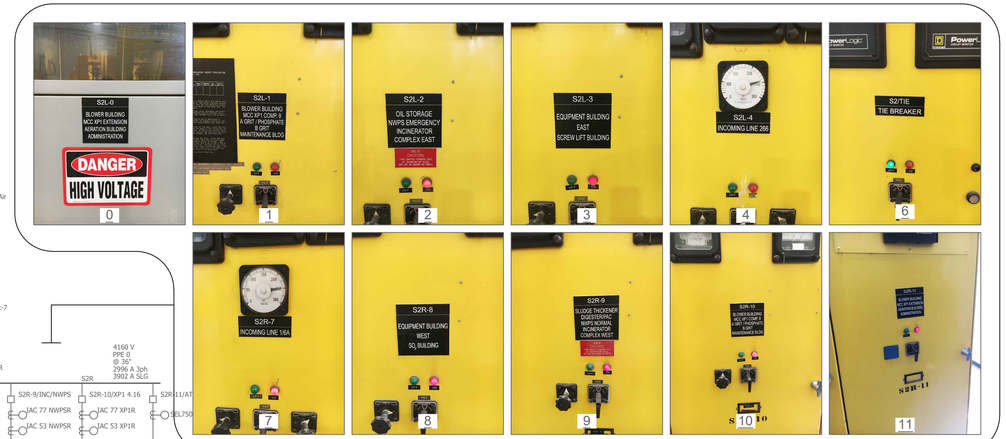

NOTES:

1. THE CONTRACTOR SHALL OBTAIN THE SERVICES OF EATON TO UPDATE THE ARC FLASH ANALYSIS/COORDINATION STUDY/SHORT CIRCUIT ANALYSIS FOR NOT ONLY THE PROPOSED WORK SHOWN THIS CONTRACT, BUT THE WORK CURRENTLY UNDER CONSTRUCTION BEING DONE BY OTHERS FOR THE GRIT-A BUILDING ADDITION AND ASSOCIATED REVISIONS TO GRIT-A AND THE ULTRAVIOLET DISINFECTION SYSTEM BEING ADDED TO THE PLANT ELECTRICAL SYSTEM.
2. CONTRACTOR/EATON TO INCLUDE IN BID TO WALK THE SITE, FIELD VERIFY THE WORK BEING DONE BY OTHERS, COLLECT THE NECESSARY FIELD DATA AND REVISE THE ARC FLASH ANALYSIS TO INCLUDE THESE OTHER PROJECTS AS WELL AS THE WORK SHOWN ON THE CONTRACT DRAWINGS. OBTAIN DRAWINGS FROM OWNER FOR WORK DONE BY OTHERS THAT IS TO BE INCLUDED IN ANALYSIS THIS CONTRACT. DRAWINGS ARE AVAILABLE FOR REVIEW AT FLINT WPC.

EXISTING DRAWING FROM PREVIOUS PROJECT. PROPOSED WORK SHOWN BOLD, CROSSHATCHED, AND/OR CIRCLED.

TETRA TECH
www.tetratech.com
3497 COOLIDGE ROAD
EAST LANSING, MI. 48823
PHONE: (517)316.3963 FAX: (517)484.8140

MARK	DATE	DESCRIPTION	BY
1	6/22/21	ISSUED FOR BIDS	

CITY OF FLINT, MICHIGAN
FLINT WPC GRIT BAT "B" SYSTEM & PRIMARY TANKS IMPROVEMENTS

EXISTING OVERALL POWER ONE-LINE DEMOLITION

PROJ: 200-156238-21001
DESN: GCJ
DRWN: JLS
CHKD: GCJ

E-100
OF 46

Copyright: Tetra Tech

Bar Measures 1 inch, otherwise drawing not to scale

6/21/2021 3:46:55 PM - \\TT-LOCAL\IER\PROJECTS\LANSING\IER\156238\200-156238-21001\CAD\SHEETFILES\E1E-100_EX POWER ONELINE_DEMO.DWG - SHANK, JASON

4"C(3#500 KCMIL, 8 KV RATED, 1#4/0)
FROM EXISTING MAIN, 5 KV SWITCHGEAR-S2. SEE SHEET E-102. FEEDER BREAKER NO.1 AT EXISTING SWITCHGEAR-S2
4"C(3#500 KCMIL, 8 KV RATED, 1#4/0)
FROM EXISTING MAIN, 5 KV SWITCHGEAR-S2. SEE SHEET E-102. FEEDER BREAKER NO.10 AT EXISTING SWITCHGEAR-S2.

MAIN NO.1
MAIN NO.2
N.C.
K1 1200A
3 - K1 LOCKS
2 - K1 KEYS
SURGE ARRESTORS. (TYP.)
600E
SWITCH TO BE RATED 50 KA RMS SYM. BRACING. (TYP.)
1200A N.O.
5 KV, 3 PH, 3W, 60 HZ, 1200A BUS, 60 KVBIL, 50 KA RMS SYM. BRACING
2 - K2 LOCKS
1 - K2 KEY
K2 600A
200E
150E
EXACT FUSE SIZE PER COORDINATION STUDY. (TYP.)
GROUND BUS
BLOWER SWITCHGEAR (MVUS NO.1)
5 KV, 60 KVBIL, 350 MVA RATED. NEMA 12 ENCLOSURE. INSTALLED UNDER WPC AERATION UPGRADES
4"C(3#2/0, 8 KV RATED, 1#4/0)
1"C(3#10)
1"C(1-12 STRAND MULTIMODE F.O. CABLE)
LP-MCC-XP1 SPARE BREAKER
BPP

FEEDERS TO GRIT-B
BLOWER PACKAGE NO.1
BLOWER PACKAGE NO.2
BLOWER PACKAGE NO.3
LSIG
4160V 750 KVA 480V/277V 3 PH, 4 W
1"C(4-2/C#16SH)
2"C(6#12,12#14)
1"C(12#14) EA.
1"C(4#10) EA.
1"C(2-2/C#16SH) EA.
9 CONDUITS TOTAL.
BLOWER SKID
2"C(20-3/C#16SH)
2"C(30#12)
2"C(40#14)
30A C
V V
T P L
1-1 1-2 1-3
2-1 2-2 2-3
3-1 3-2 3-3
MOTORIZED VALVES
BLOWER NO.1
BLOWER NO.2
BLOWER NO.3

FEEDERS TO EXISTING TRANSFORMERS AT GRIT-A BUILDING, MAINTENANCE BUILDING AND GRIT-B BUILDINGS. SEE SITE PLAN, SHEET E-003 AND E-005 FOR ADDITIONAL INFORMATION AND WORK REQUIRED TO BE DEMOLISHED.

EXISTING DRAWING FROM PREVIOUS PROJECT. PROPOSED WORK SHOWN BOLD, CROSSHATCHED, AND/OR CIRCLED.

EXISTING MVUS NO.1 - BLOWER SWITCHGEAR
LOCATED IN BLOWER ROOM

TETRA TECH
www.tetratech.com
3497 COOLIDGE ROAD
EAST LANSING, MI. 48823
PHONE: (517)316.3963 FAX: (517)484.8140

MARK	DATE	DESCRIPTION	BY
1	6/22/21	ISSUED FOR BIDS	

CITY OF FLINT, MICHIGAN
FLINT WPC GRIT BAT "B" SYSTEM & PRIMARY TANKS IMPROVEMENTS
EXISTING 5 KV POWER ONE-LINE DIAGRAM DEMOLITION

PROJ:	200-156238-21001
DESN:	GCJ
DRWN:	JLS
CHKD:	GCJ

E-101
OF 46

Copyright: Tetra Tech

Bar Measures 1 inch, otherwise drawing not to scale

6/21/2021 3:46:59 PM - \\TT.LOCAL\ER\PROJECTS\LANSING\ER\156238\200-156238-21001\CAD\SHEETFILES\E\E-101_EX POWER ONELINE_DEMO.DWG - SHANK, JASON

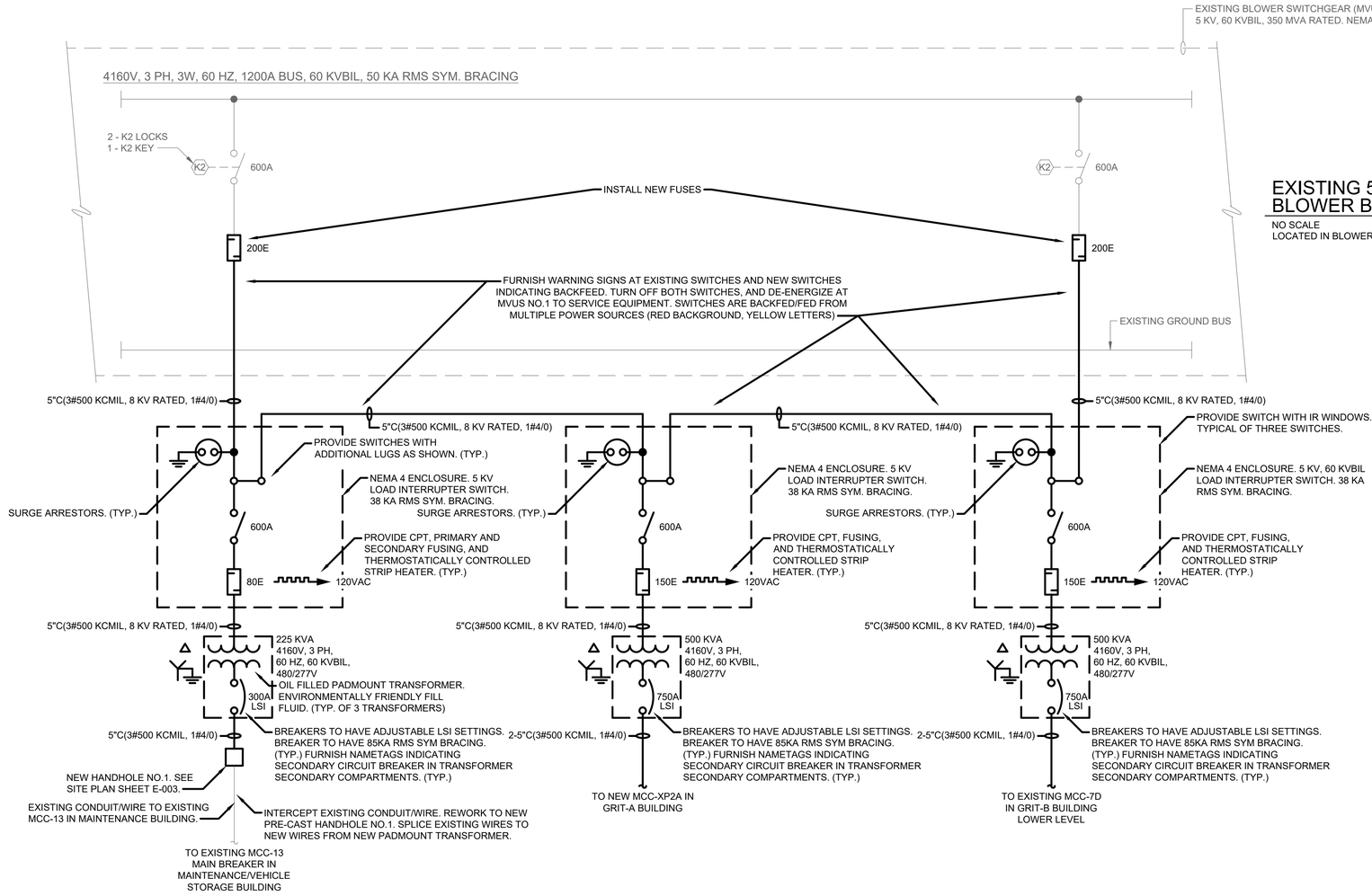

EXISTING 5K SWITCHGEAR IN BLOWER BUILDING - PARTIAL ONE-LINE

NO SCALE
LOCATED IN BLOWER BUILDING SEE SHEET E-003

PARTIAL POWER ONE-LINE DIAGRAM - PROPOSED WORK

NO SCALE

TETRA TECH
www.tetratech.com
3497 COOLIDGE ROAD
EAST LANSING, MI. 48823
PHONE: (517)316.3963 FAX: (517)484.8140

MARK	DATE	DESCRIPTION	BY
1	6/22/21	ISSUED FOR BIDS	

CITY OF FLINT, MICHIGAN

FLINT WPC GRIT BAT "B" SYSTEM & PRIMARY TANKS IMPROVEMENTS

PARTIAL POWER ONE-LINE DIAGRAM PROPOSED WORK

PROJ:	200-156238-21001
DESN:	GCJ
DRWN:	JLS
CHKD:	GCJ

E-102

OF 46

Copyright: Tetra Tech

6/21/2021 3:47:02 PM - \\TT.LOCAL\IER\PROJECTS\LANSING\IER\156238\200-156238-21001\CAD\SHEETFILES\IE-102_PARTIAL POWER ONELINE_PR.DWG - SHANK, JASON

Bar Measures 1 inch, otherwise drawing not to scale

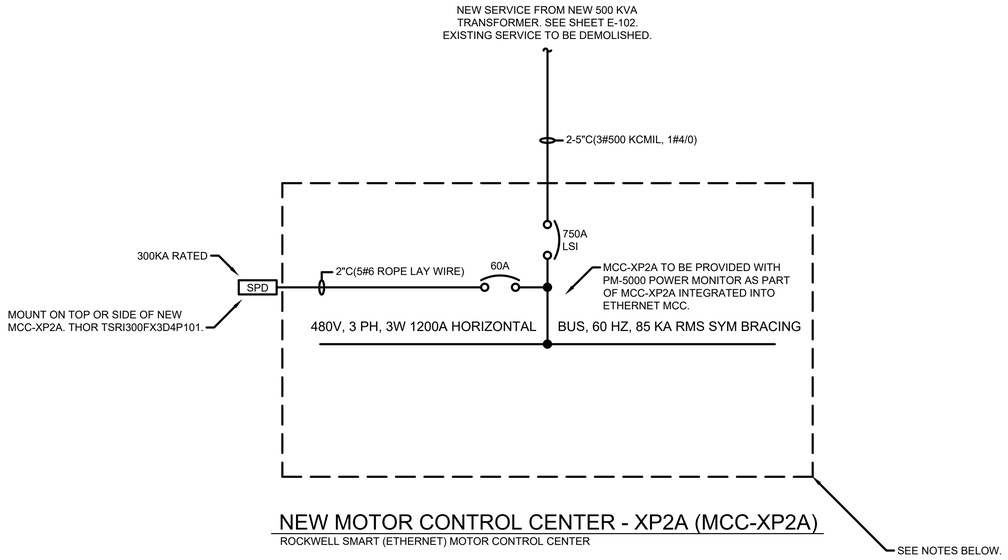

NEW MOTOR CONTROL CENTER - XP2A (MCC-XP2A)

ROCKWELL SMART (ETHERNET) MOTOR CONTROL CENTER

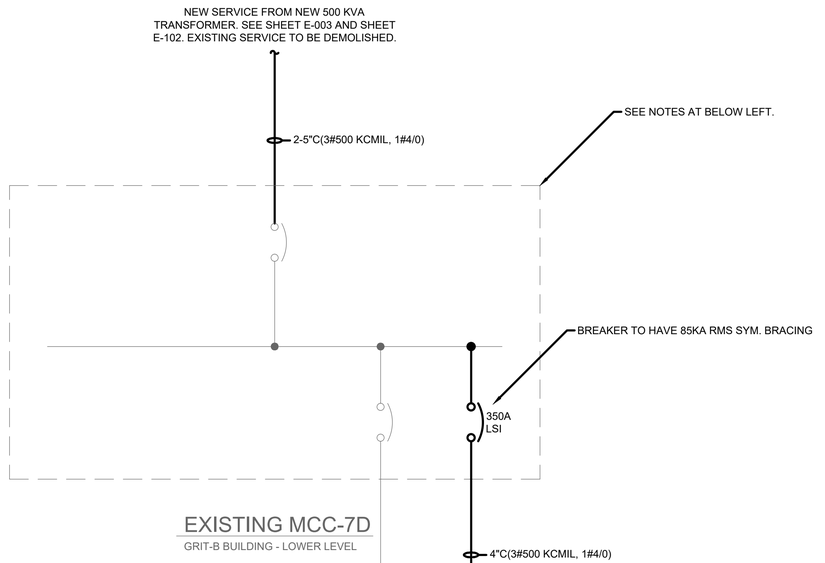

EXISTING MCC-7D

GRIT-B BUILDING - LOWER LEVEL

EXISTING MCC-7U

GRIT-B BUILDING - UPPER LEVEL

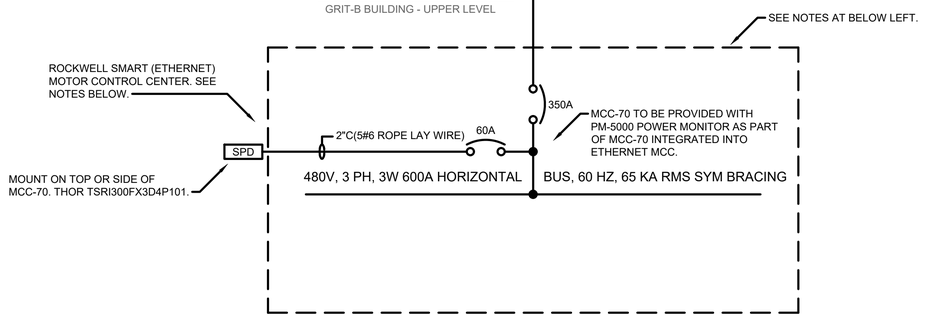

NEW MCC-70

LOCATED IN GRIT-B ELECTRICAL ROOM

NOTES MCC-XP2A:

1. REPLACE THE EXISTING MOTOR CONTROL CENTER IN IT'S ENTIRETY. OBTAIN THE SERVICES OF ROCKWELL TO REPLACE THIS MOTOR CONTROL CENTER IN IT'S ENTIRETY AND MATCH EXACTLY THE NUMBER OF FEEDER BREAKERS, AND STARTERS THAT CURRENTLY EXIST. IN THE SPARE SPACES ARE TO BE INSTALLED THE ADDITIONAL FEEDER BREAKERS AND STARTERS SHOWN ON THE ONE-LINE DIAGRAM FOR THE NEW SLUDGE COLLECTORS, CROSS COLLECTORS AND FEEDER BREAKERS FOR THE NEW MOTORIZED ACTUATORS AS WELL AS OTHER LOADS.
2. THE MOTOR CONTROL CENTER IS TO BE PROVIDED IN THE SAME RATINGS, SIZES AND CONTROL FUNCTIONS THAT EXISTED WITH THE EXISTING MOTOR CONTROL CENTER. THAT INCLUDES LED STATUS LIGHTS, ILLUMINATED STOP PUSHBUTTONS, SELECTOR SWITCHES, STARTERS, ETHERNET MODULES, SOLID STATE OVERLOAD MODULES, ETHERNET CABLING. MATCH EXISTING SHORT CIRCUIT WITHSTAND RATINGS, FEATURES, AND PROTECTIVE FUNCTIONS THAT EXISTED WITH THE EXISTING MOTOR CONTROL CENTER. THE NEW MOTOR CONTROL CENTER IS TO BE PROVIDED AS A SMART MOTOR CONTROL CENTER PRE-WIRED, CONFIGURED WITH ETHERNET AND PROGRAMMED IN FUNCTIONALITY TO MATCH THE EXISTING MONITORING THAT EXISTED WITH THE DEVICENET CONFIGURATION OF EXISTING MCC-XP2A. INCLUDE NEW CONTROL LOGIX PROGRAMMABLE LOGIC CONTROLLER, RACK, POWER SUPPLIES, TWO ETHERNET BRIDGE CARDS AT A MINIMUM(ONE FOR IO AND ONE FOR CONNECTION TO SCADA LAN) AND A PANELVIEW PLUS 1500 SERIES 7. THE PROGRAMMABLE LOGIC CONTROLLER, AND PANELVIEW ARE TO BE PROGRAMMED TO MATCH THE PREVIOUS SCREENS FOR MONITORING, ALARMING AND CONTROL THAT EXISTED WITH THE EXISTING DEVICENET SMART MOTOR CONTROL CENTER.
3. COORDINATE PROGRAMMING OF IP ADDRESSES WITH TETRA TECH. THE NEW SLUDGE AND CROSS COLLECTORS ARE TO RECEIVE START/STOP COMMANDS FROM THE GPP WHICH CONTAINS A ROCKWELL CONTROL LOGIX PROCESSOR. PROVIDE DISCRETE STATUS'S TO GPP AS SHOWN ON CONTRACT DRAWINGS. TURN OVER COPIES OF THE PLC AND PANELVIEW PROGRAMS TO TETRA TECH FOR INTEGRATION INTO THE EXISTING PLANT WIDE SCADA SYSTEM.
4. ROCKWELL SHALL COORDINATE DATA TRANSFER TO/FROM MCC TO THE EXISTING SCADA SYSTEM WITH OWNER/ENGINEER. IT'S INTENDED THAT START/STOP COMMANDS WILL ORIGINATE AND BE CONTROLLED WITHIN OWNER'S NEW LOGIX PLC & INPUT/OUTPUT EQUIPMENT. ROCKWELL SHALL COORDINATE WITH OWNER/ENGINEER A COMPLETE MCC STATUS DATA TABLE VIA EXCEL SPREADSHEET LISTING PERTINENT TO THE MCC DATA TO BE EXCHANGED TO/FROM (PRODUCE/CONSUME) OWNER'S NEW LOGIX PLC EQUIPMENT.

NOTES MCC-70:

1. FURNISH AND INSTALL A NEW MOTOR CONTROL CENTER 7O TO BE LOCATED IN THE NEW ELECTRICAL ROOM IN GRIT B BUILDING. FURNISH STARTERS, FEEDER BREAKERS, SURGE PROTECTION, ETC., AS SHOWN ON THE ONE-LINE DIAGRAM.
2. FURNISH THIS MOTOR CONTROL CENTER FROM ROCKWELL AS A SMART MOTOR CONTROL CENTER COMPLETE WITH ETHERNET MODULES, CABLING, CONNECTIONS, CONTROL LOGIX CONTROLLER, IO CARDS, ETHERNET BRIDGE CARDS(IO AND LAN TO BE SEPARATE BRIDGE CARDS), PANELVIEW PLUS SERIES 7 1500 AND PROGRAMMING FOR THE CONTROL LOGIX PLC AND THE PANELVIEW. PROCESSOR TO BE L81 SERIES. ROCKWELL TO PROGRAM THIS MOTOR CONTROL CENTER TO MATCH THE MONITORING BEING PROVIDED FOR MOTOR CONTROL CENTER XP2A.
3. ROCKWELL SHALL COORDINATE DATA TRANSFER TO/FROM MCC TO THE EXISTING SCADA SYSTEM WITH OWNER/ENGINEER. IT'S INTENDED THAT START/STOP COMMANDS WILL ORIGINATE AND BE CONTROLLED WITHIN OWNER'S NEW LOGIX PLC & INPUT/OUTPUT EQUIPMENT. ROCKWELL SHALL COORDINATE WITH OWNER/ENGINEER A COMPLETE MCC STATUS DATA TABLE VIA EXCEL SPREADSHEET LISTING PERTINENT TO THE MCC DATA TO BE EXCHANGED TO/FROM (PRODUCE/CONSUME) OWNER'S NEW LOGIX PLC EQUIPMENT.

NOTES EXISTING MCC-7D:

1. FURNISH AND INSTALL WITHIN EXISTING MOTOR CONTROL CENTER 7D A NEW MOLDED CASE CIRCUIT BREAKER FOR POWERING NEW MCC-7O. MATCH EXISTING RATINGS, PROTECTIONS, FUNCTIONS, FEATURES, DEVICENET CONNECTIONS, AND PROGRAMMING. PROGRAMMING BY ROCKWELL.
2. OBTAIN THE SERVICES OF ROCKWELL TO MAKE THE NECESSARY MODIFICATIONS TO THIS MOTOR CONTROL CENTER INCLUDING THE BREAKER, DEVICENET CONNECTIONS, INTERNAL WIRING, CONTROL LOGIX PROGRAMMING AND PANELVIEW PROGRAMMING TO ACCOMMODATE THIS NEW MOLDED CASE CIRCUIT BREAKER.
3. TURN OWNER ELECTRONIC COPIES OF PLC AND PANELVIEW PROGRAMS FOR OWNER'S USE IN INTEGRATING CHANGES TO EXISTING SCADA SYSTEM.

TETRA TECH
www.tetratech.com
3497 COOLIDGE ROAD
EAST LANSING, MI. 48823
PHONE: (517)316.3963 FAX: (517)484.8140

MARK	DATE	DESCRIPTION	BY
1	6/22/21	ISSUED FOR BIDS	

CITY OF FLINT, MICHIGAN

FLINT WPC GRIT BAT "B" SYSTEM & PRIMARY TANKS IMPROVEMENTS

ELECTRICAL POWER ONE-LINE DIAGRAM PROPOSED WORK

PROJ:	200-156238-21001
DESN:	GCJ
DRWN:	JLS
CHKD:	GCJ

E-103

OF 46

Copyright: Tetra Tech

Bar Measures 1 inch, otherwise drawing not to scale

6/21/2021 3:47:05 PM - \\TT.LOCAL\ERP\PROJECTS\LANSING\ER\156238\200-156238-21001\CAD\SHEETFILES\E-103_POWER ONELINE_PR.DWG - SHANK, JASON

MCC P-7 UP (MCC-7U)

AH1 - L4 TRANSFORMER - FEEDER (FEEDER)
AH2 - LIGHTING PANEL - L4 & L19 (FEEDER)
AH3 - GRIT BUCKET - CRANE (STARTER)
AH4 - 30A RECEPTACLE (FEEDER)
AH5 - GRIT & PRIMARY - TANK LIGHTING (STARTER)
AH6 - INCOMING LINE
BH2 - GRIT BELT - CONVEYOR NO.1 NORTH (STARTER)
BH3 - GRIT BUCKET - ELEVATOR NO.1 NORTH (STARTER)
BH4 - GRIT TANK #3 SCREW CONVEYOR NORTH (STARTER)
CH2 - GRIT BELT - CONVEYOR NO.2 SOUTH (STARTER)
CH3 - GRIT BUCKET - ELEVATOR NO.2 SOUTH (STARTER)
CH4 - GRIT TANK #4 SCREW CONVEYOR SOUTH (STARTER)
CONTROL LOGIX UNIT
DH3 - BATTERY B GRIT - TANK AIR VALVE ACTUATOR LPA (FEEDER)
DH4 - BATTERY B PRIMARY - CHANNEL AIR VALVE ACTUATOR (FEEDER)
EH2 - GRIT TANK #3 - WEIR MOTOR (FEEDER)
EH3 - GRIT TANK #4 - WEIR MOTOR (FEEDER)
DH2 - GRIT WASHER (STARTER)
EH4 - EXHAUST FAN - EF-13 (STARTER)
EH5 - EXHAUST FAN - EF-14 (STARTER)
EH6 - SUPPLY FAN - SF-5 (STARTER)

NOTE: CONTRACT SHALL INCLUDE IN BID TO DEMOLISH CONDUIT/WIRE FROM THIS FIELD EQUIPMENT BACK TO MOTOR CONTROL CENTER. RELABEL EXISTING BUCKETS NO LONGER IN USE AS SPARE.



MCC-7U

MCC P-7 DOWN (MCC-7D)

AG1 - MCC P7B - FEEDER (FEEDER)
AG2 - DUPLEX SUMP - PUMP SP-5 (FEEDER)
AG3 - DUPLEX SUMP - PUMP SP-6 (FEEDER)
AG4 - FEEDER AND STARTER
AG5 - ODOR REMOVAL - BLOWERS (FEEDER)
BG1 - RAW SLUDGE - PUMP #9 (STARTER)
BG2 - RAW SLUDGE - PUMP #10 (STARTER)
BG3 - EXHAUST FAN - EF-11 (STARTER)
BG4 - EXHAUST FAN - EF-12 (STARTER)
CG1 - PRIMARY TANK #9 - COLLECTOR DRIVE (STARTER)
CG2 - PRIMARY TANK #10 - COLLECTOR DRIVE (STARTER)
CG3 - RAW SLUDGE - PUMP #7 (STARTER)
CG4 - RAW SLUDGE - PUMP #8 (STARTER)
DG1 - OVERHEAD DOOR (FEEDER)
DG2 - PRIMARY TANK #7 - COLLECTOR DRIVE (STARTER)
DG3 - PRIMARY TANK #8 - COLLECTOR DRIVE (STARTER)
DG4 - B GRIT DOWN - METERING COMPARTMENT (FEEDER, METER)
DG5 - INCOMING BREAKER

DEMOLISH CONDUIT/WIRE FROM EQUIPMENT MOTOR IN FIELD TO MCC TO BE DEMOLISHED. (TYP.)

NOTE: CONTRACT SHALL INCLUDE IN BID TO DEMOLISH CONDUIT/WIRE FROM THIS FIELD EQUIPMENT BACK TO MOTOR CONTROL CENTER. RELABEL EXISTING BUCKETS NO LONGER IN USE AS SPARE.



MCC-7D

MCC XP2A - GRIT-A MOTOR CONTROL CENTER (9 SECTIONS)

SEE NOTE NO. 3 BELOW

EXISTING ROCKWELL SERIAL NUMBER SNLDWRH30/1. NEW LOADS ON SHEET E-105 THROUGH E-109 TO BE INCLUDED IN ADDITION TO THE EXISTING LOADS BELOW.

ARRANGE BUCKETS IN NEW MCC-XP2A TO MATCH EXISTING SO THAT EXISTING WIRES CAN BE RECONNECTED TO LOADS THAT REMAIN.

SCUM CHOPPER PUMP #2 (STARTER)
SPARE (FEEDER) - CURRENTLY CCC TEMP POWER
A GRIT - #1 METERING COMPARTMENT (FEEDER, METER)
PANELVIEW
INCOMING MAIN (BOTTOM FEED)
CONTROL LOGIX UNIT
BATTERY A PRIMARY - CHANNEL AIR VALVE ACTUATOR (FEEDER)
BATTERY A - NORTH GRIT TANK - AIR VALVE ACTUATOR (FEEDER)
BATTERY A - SOUTH GRIT TANK - AIR VALVE ACTUATOR (FEEDER)

CROSS-HATCHING INDICATES BUCKETS TO BE DEMOLISHED. (TYP.)

PRIMARY TANK - #1 COLLECTOR (STARTER)
PRIMARY TANK - #2 COLLECTOR (STARTER)
PRIMARY TANK - #3 COLLECTOR (STARTER)
PRIMARY TANK - #4 COLLECTOR (STARTER)
PRIMARY TANK - #5 COLLECTOR (STARTER)
PRIMARY TANK - #6 COLLECTOR (STARTER)
RAW SLUDGE - PUMP #1 (STARTER)
RAW SLUDGE - PUMP #2 (STARTER)
RAW SLUDGE - PUMP #3 (STARTER)
RAW SLUDGE - PUMP #4 (STARTER)
RAW SLUDGE - PUMP #5 (STARTER)
RAW SLUDGE - PUMP #6 (STARTER)
GRIT PUMP - #1 SOUTH (STARTER)
GRIT PUMP - #2 CENTER (STARTER)
GRIT PUMP - #3 NORTH (STARTER)
SCUM CHOPPER PUMP #1 (STARTER)
AIR COMPRESSOR #1 (STARTER)
AIR COMPRESSOR #2 (STARTER)
AIR COMPRESSOR #3 (STARTER)
SCREW CONVEYOR #1 SOUTH (STARTER)
SCREW CONVEYOR #2 SOUTH (STARTER)
LIGHTING PANEL (FEEDER)
SUMP PUMP (FEEDER)
PRIMARY TANK LIGHTING (STARTER)
PHOSPHATE BUILDING FEEDER (FEEDER)
30A FEEDER BREAKER
30A FEEDER BREAKER
100A FEEDER BREAKER
20A FEEDER BREAKER
20A FEEDER BREAKER
20A FEEDER BREAKER
30A FEEDER BREAKER
30A FEEDER BREAKER

THESE BREAKERS FURNISHED BY ROCKWELL IN GRIT-A ADDITION PROJECT. THESE ARE TO BE INCLUDED IN NEW MCC-XP2A AS PART OF THIS CONTRACT.

NOTE:
1. CONTRACT SHALL INCLUDE IN BID TO DEMOLISH CONDUIT/WIRE FROM THIS FIELD EQUIPMENT BACK TO MOTOR CONTROL CENTER. RELABEL EXISTING BUCKETS NO LONGER IN USE AS SPARE.
2. CONTRACTOR SHALL INCLUDE IN BID TO RECONNECT EXISTING FIELD WIRES FOR POWER, CONTROL, AND SIGNAL FOR ALL THE ABOVE EXISTING LOADS SHOWN TO REMAIN.
3. NEW MCC-XP2A IS EXPECTED TO BE 11 SECTIONS TOTAL. INCLUDE IN BOTH TO INSTALL TWO ADDITIONAL SECTIONS AS SHOWN ON SHEET E-314, FOR THE NEW LOADS BEING ADDED.

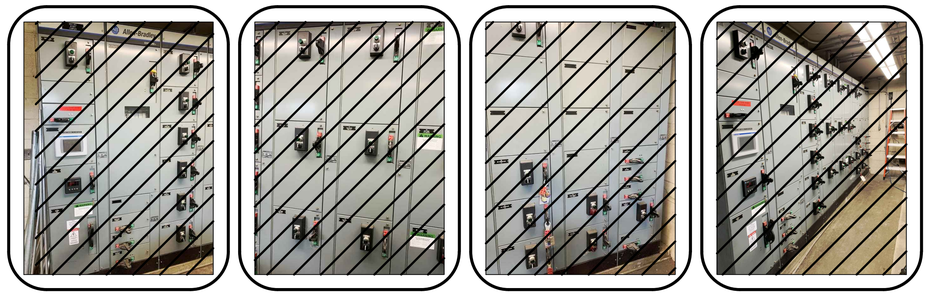

MCC-XP2A

TETRA TECH
www.tetratech.com
3497 COOLIDGE ROAD
EAST LANSING, MI. 48823
PHONE: (517)316.3963 FAX: (517)484.8140

MARK	DATE	DESCRIPTION	BY
1	6/22/21	ISSUED FOR BIDS	

CITY OF FLINT, MICHIGAN
FLINT WPC GRIT BAT "B" SYSTEM & PRIMARY TANKS IMPROVEMENTS
ELECTRICAL
MCC-XP2A, MCC-7D, MCC-7U
PROPOSED WORK

PROJ:	200-156238-21001
DESN:	GCJ
DRWN:	JLS
CHKD:	GCJ

E-104
OF 46

Copyright: Tetra Tech

Bar Measures 1 inch, otherwise drawing not to scale

6/21/2021 3:47:09 PM - \\TT.LOCAL\IER\PROJECTS\LANSING\IER\156238\200-156238-21001\CAD\SHEETFILES\E\E-104_POWER ONELINE_PR_II.DWG - SHANK, JASON

CONTINUED ON NEXT SHEET

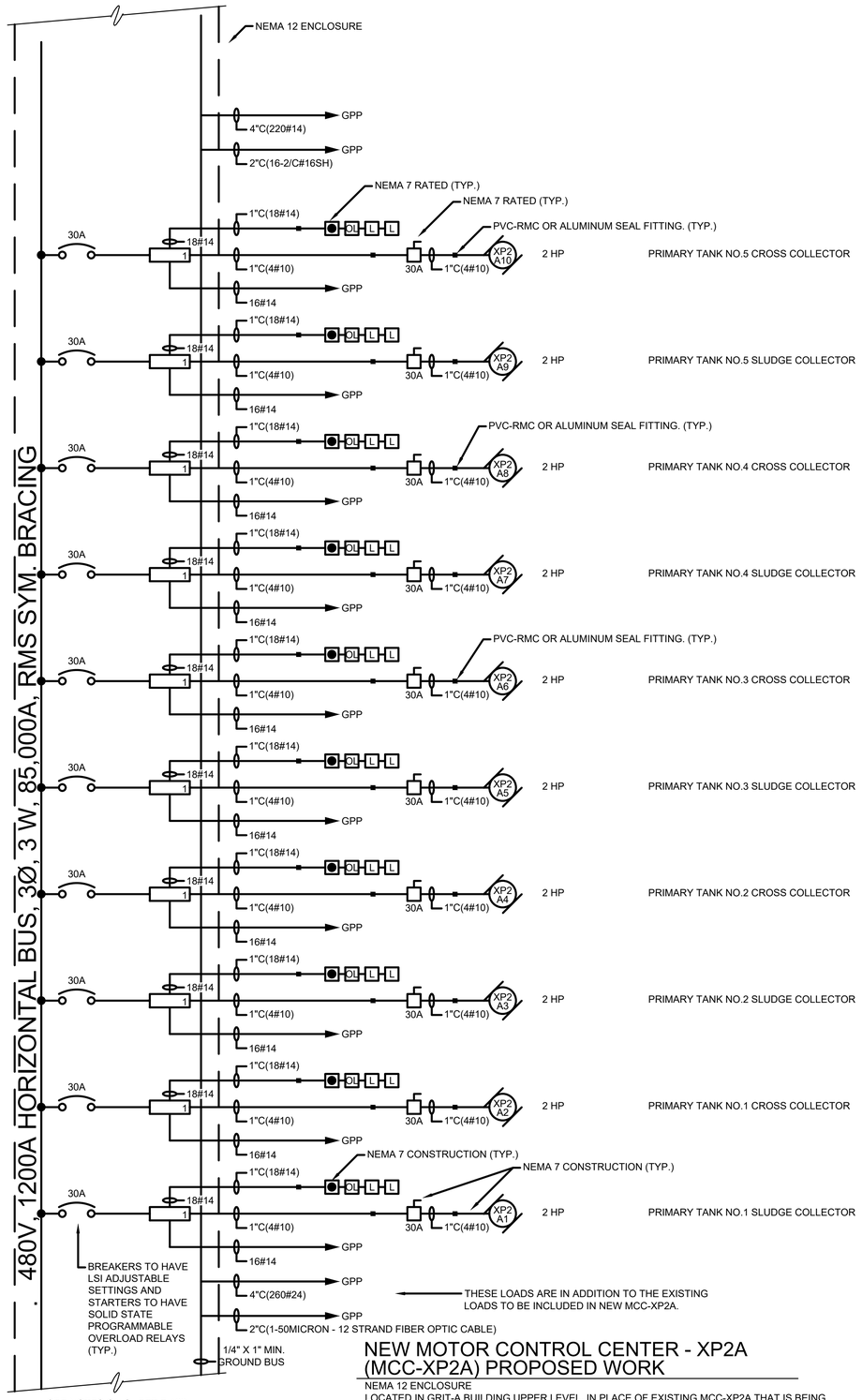

SEE NOTES ON SHEET E-103

NEW MOTOR CONTROL CENTER - XP2A (MCC-XP2A) PROPOSED WORK

NEMA 12 ENCLOSURE
LOCATED IN GRIT-A BUILDING UPPER LEVEL. IN PLACE OF EXISTING MCC-XP2A THAT IS BEING DEMOLISHED AND REPLACED THIS CONTRACT. SEE NOTES SHEET E-103 FOR ADDITIONAL INFORMATION.

CONTINUED ON NEXT SHEET

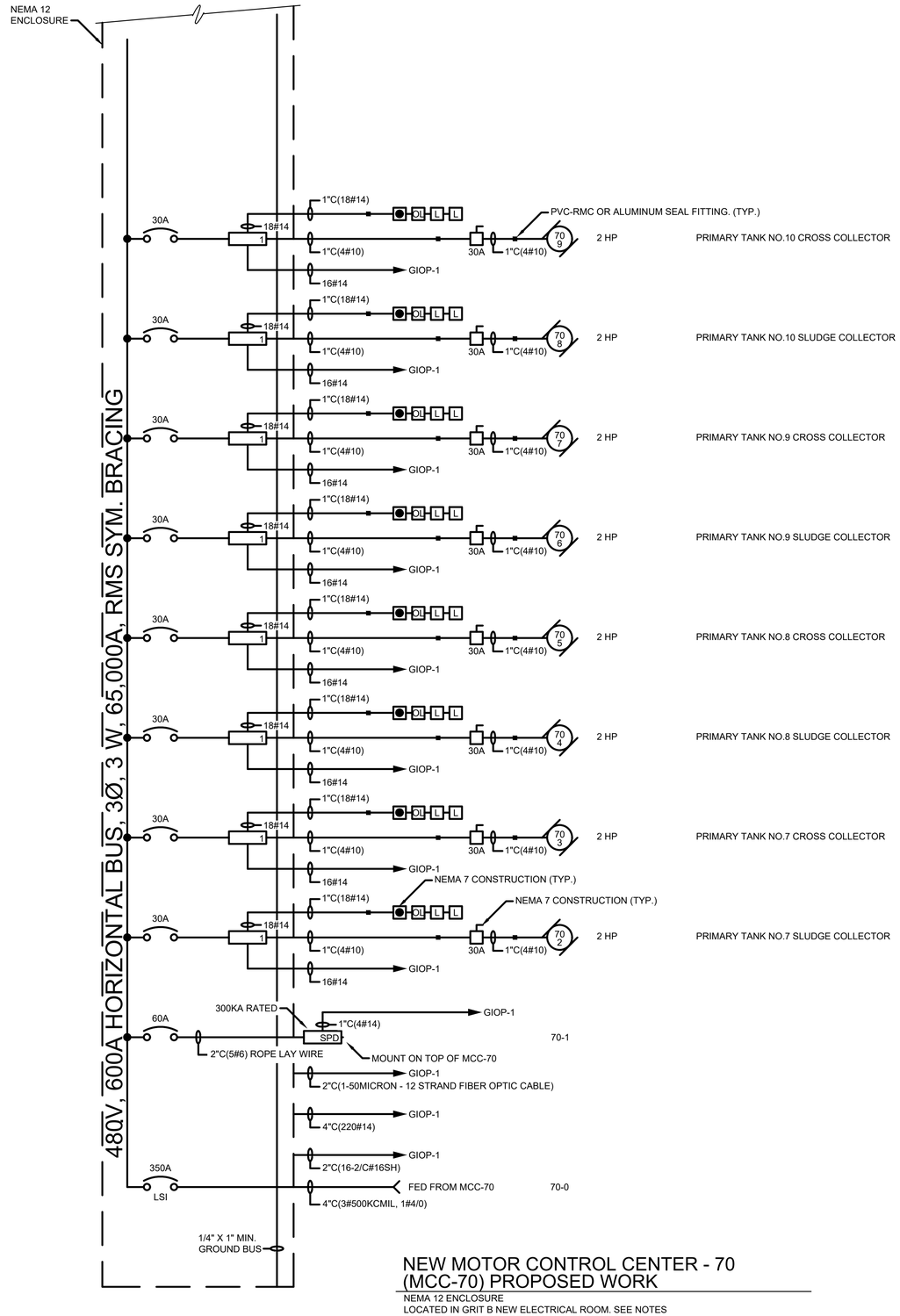

NEW MOTOR CONTROL CENTER - 70 (MCC-70) PROPOSED WORK

NEMA 12 ENCLOSURE
LOCATED IN GRIT B NEW ELECTRICAL ROOM. SEE NOTES ON SHEET E-103 FOR ADDITIONAL INFORMATION.

TETRA TECH
www.tetratech.com
3497 COOLIDGE ROAD
EAST LANSING, MI. 48823
PHONE: (517)316.3963 FAX: (517)484.8140

MARK	DATE	DESCRIPTION	BY
1	6/22/21	ISSUED FOR BIDS	

CITY OF FLINT, MICHIGAN
FLINT WPC GRIT BAT "B" SYSTEM & PRIMARY TANKS IMPROVEMENTS

ELECTRICAL
MCC-XP2A, MCC-70 ONE-LINE DIAGRAMS - PROPOSED WORK

PROJ:	200-156238-21001
DESN:	GCJ
DRWN:	JLS
CHKD:	GCJ

E-105
OF 46

Copyright: Tetra Tech

Bar Measures 1 inch, otherwise drawing not to scale

6/21/2021 3:47:13 PM - \\TT.LOCAL\IER\PROJECTS\LANSING\IER\156238\200-156238-21001\CAD\SHEETFILES\E-105_MCC-XP2A & 70 ONELINE.DWG - SHANK, JASON

CONTINUED ON NEXT SHEET

480V, 1200A HORIZONTAL BUS, 3Ø, 3 W, 85,000A, RMS SYM. BRACING

PVC-RMC OR ALUMINUM SEAL FITTING
NEMA 7 CONSTRUCTION (TYP.)

NEMA 7 RATED (TYP.) 1"C(12#14) → JB C 30A → XP2 A20	1"C(2-2/C#16SH) GPP GPP	2 HP	GATE F1-36
2"C(4#8) 2"C(4#8) 1"C(4#10)			
2"C(4#8) 1"C(12#14) → JB C 30A → XP2 A19	GPP GPP 1"C(2-2/C#16SH)	2 HP	GATE F1-35
2"C(4#8) 2"C(4#8) 1"C(4#10)			
2"C(4#8) 1"C(12#14) → JB C 30A → XP2 A18	GPP GPP 1"C(2-2/C#16SH)	2 HP	GATE F1-34
2"C(4#8) 2"C(4#8) 1"C(4#10)			
40A → 2"C(4#8) → 2"C(4#8) 1"C(12#14) → JB C 30A → XP2 A17	GPP GPP 1"C(2-2/C#16SH)	2 HP	GATE F1-33
2"C(4#8) 1"C(4#10)			
NEMA 7 RATED (TYP.) 1"C(12#14) → JB C 30A → XP2 A16	1"C(2-2/C#16SH) GPP GPP		GATE F1-32
2"C(4#8) 1"C(4#10)			
2"C(4#8) 1"C(12#14) → JB C 30A → XP2 A15	GPP GPP 1"C(2-2/C#16SH)	2 HP	GATE F1-31
2"C(4#8) 2"C(4#8) 1"C(4#10)			
2"C(4#8) 1"C(12#14) → JB C 30A → XP2 A14	GPP GPP 1"C(2-2/C#16SH)	2 HP	GATE F1-30
2"C(4#8) 2"C(4#8) 1"C(4#10)			
40A → 2"C(4#8) → 2"C(4#8) 1"C(12#14) → JB C 30A → XP2 A13	GPP GPP 1"C(2-2/C#16SH)	2 HP	GATE F1-29
2"C(4#8) 1"C(4#10)			
20A → 1			SPARE
30A			SPARE
30A → 1	NEMA 7 RATED (TYP.) 1"C(18#14) → OL L L; NEMA 7 RATED (TYP.) 18#14 1"C(4#10) → 30A → XP2 A12 1"C(4#10); GPP 16#14	2 HP	PRIMARY TANK NO.6 CROSS COLLECTOR
30A → 1	NEMA 7 RATED (TYP.) 1"C(18#14) → OL L L; NEMA 7 RATED (TYP.) 18#14 1"C(4#10) → 30A → XP2 A11 1"C(4#10); GPP 16#14	2 HP	PRIMARY TANK NO.6 SLUDGE COLLECTOR

THESE LOADS ARE IN ADDITION TO THE EXISTING LOADS TO BE INCLUDED IN NEW MCC-XP2A.

1/4" X 1" MIN. GROUND BUS

SEE NOTES ON SHEET E-103

MOTOR CONTROL CENTER - XP2A (MCC-XP2A) PROPOSED WORK - CONTINUED

NEMA 12 ENCLOSURE
LOCATED IN GRIT A BUILDING UPPER LEVEL.

CONTINUED ON NEXT SHEET

NEMA 12 ENCLOSURE

480V, 600A HORIZONTAL BUS, 3Ø, 3 W, 65,000A, RMS SYM. BRACING

NEMA 7 RATED (TYP.) 1"C(12#14) → JB C 30A → 70 20	1"C(2-2/C#16SH) GIOP-1 GIOP-1	2 HP	GATE F1-60
2"C(4#8) 2"C(4#8) 1"C(4#10)			
2"C(4#8) 1"C(12#14) → JB C 30A → 70 19	GIOP-1 GIOP-1 1"C(2-2/C#16SH)	2 HP	GATE F1-59
2"C(4#8) 2"C(4#8) 1"C(4#10)			
2"C(4#8) 1"C(12#14) → JB C 30A → 70 18	GIOP-1 GIOP-1 1"C(2-2/C#16SH)	2 HP	GATE F1-58
2"C(4#8) 2"C(4#8) 1"C(4#10)			
40A → 2"C(4#8) → 2"C(4#8) 1"C(12#14) → JB C 30A → 70 17	GIOP-1 GIOP-1 1"C(2-2/C#16SH)	2 HP	GATE F1-57
2"C(4#8) 1"C(4#10)			
NEMA 7 RATED (TYP.) 1"C(12#14) → JB C 30A → 70 16	1"C(2-2/C#16SH) GIOP-1 GIOP-1	2 HP	GATE F1-56
2"C(4#8) 1"C(4#10)			
2"C(4#8) 1"C(12#14) → JB C 30A → 70 15	GIOP-1 GIOP-1 1"C(2-2/C#16SH)	2 HP	GATE F1-55
2"C(4#8) 2"C(4#8) 1"C(4#10)			
2"C(4#8) 1"C(12#14) → JB C 30A → 70 14	GIOP-1 GIOP-1 1"C(2-2/C#16SH)	2 HP	GATE F1-54
2"C(4#8) 2"C(4#8) 1"C(4#10)			
40A → 2"C(4#8) → 2"C(4#8) 1"C(12#14) → JB C 30A → 70 13	GIOP-1 GIOP-1 1"C(2-2/C#16SH)	2 HP	GATE F1-53
2"C(4#8) 1"C(4#10)			
20A → 1	70 12		SPARE
20A → 1	10#14 GIOP-1; NEMA 7 RATED 1"C(18#14) → T; 1"C(4#10) NEMA 7 RATED → 30A → 70 10 1"C(4#10)	3 HP	EXHAUST FAN NO.1 (ADDITION)
30A			SPARE

1/4" X 1" MIN. GROUND BUS

FROM PREVIOUS SHEET

MOTOR CONTROL CENTER - 70 (MCC-70) PROPOSED WORK - CONTINUED

NEMA 12 ENCLOSURE
LOCATED IN GRIT B NEW ELECTRICAL ROOM.

TETRA TECH
www.tetratech.com
3497 COOLIDGE ROAD
EAST LANSING, MI. 48823
PHONE: (517)316.3963 FAX: (517)484.8140

MARK	DATE	DESCRIPTION	BY
1	6/22/21	ISSUED FOR BIDS	

CITY OF FLINT, MICHIGAN
FLINT WPC GRIT BAT "B" SYSTEM & PRIMARY TANKS IMPROVEMENTS
ELECTRICAL
MCC-XP2A, MCC-70 ONE-LINE DIAGRAMS - PROPOSED WORK

PROJ:	200-156238-21001
DESN:	GCJ
DRWN:	JLS
CHKD:	GCJ

E-106
OF 46

Copyrgth: Tetra Tech

Bar Measures 1 inch, otherwise drawing not to scale

6/21/2021 3:47:16 PM - \\TT.LOCAL\ER\PROJECTS\LANSING\ER\156238\200-156238-21001\CAD\SHEETFILES\E-106_MCC-XP2A & 70 ONELINE_II.DWG - SHANK, JASON

CONTINUED ON NEXT SHEET

. 480V, 1200A HORIZONTAL BUS, 3Ø, 3 W, 85,000A, RMS SYM. BRACING

40A

2"C(4#8)

NEMA 7 RATED (TYP.)

1"C(12#14)	XP2 A28	2 HP	GATE F1-44
1"C(12#14)	XP2 A27	2 HP	GATE F1-43
1"C(12#14)	XP2 A26	2 HP	GATE F1-42
1"C(12#14)	XP2 A25	2 HP	GATE F1-41
1"C(12#14)	XP2 A24	2 HP	GATE F1-40
1"C(12#14)	XP2 A23	2 HP	GATE F1-39
1"C(12#14)	XP2 A22	2 HP	GATE F1-38
1"C(12#14)	XP2 A21	2 HP	GATE F1-37

1"C(2-2/C#16SH) GPP GPP

JB C 30A 2"C(4#8) 1"C(4#10)

1/4" X 1" MIN. GROUND BUS

FROM PREVIOUS SHEET

MOTOR CONTROL CENTER - XP2A (MCC-XP2A) PROPOSED WORK - CONTINUED

NEMA 12 ENCLOSURE
LOCATED IN GRIT-A BUILDING UPPER LEVEL.

CONTINUED ON NEXT SHEET

NEMA 12 ENCLOSURE

. 480V, 600A HORIZONTAL BUS, 3Ø, 3 W, 65,000A, RMS SYM. BRACING

40A

2"C(4#8)

NEMA 7 RATED (TYP.)

1"C(12#14)	70 28	2 HP	GATE F1-68
1"C(12#14)	70 27	2 HP	GATE F1-67
1"C(12#14)	70 26	2 HP	GATE F1-66
1"C(12#14)	70 25	2 HP	GATE F1-65
1"C(12#14)	70 24	2 HP	GATE F1-64
1"C(12#14)	70 23	2 HP	GATE F1-63
1"C(12#14)	70 22	2 HP	GATE F1-62
1"C(12#14)	70 21	2 HP	GATE F1-61

1"C(2-2/C#16SH) GIOP-1 GIOP-1

JB C 30A 2"C(4#8) 1"C(4#10)

1/4" X 1" MIN. GROUND BUS

FROM PREVIOUS SHEET

MOTOR CONTROL CENTER - 70 (MCC-70) PROPOSED WORK - CONTINUED

NEMA 12 ENCLOSURE
LOCATED IN GRIT-B NEW ELECTRICAL ROOM.

TETRA TECH
www.tetratech.com
3497 COOLIDGE ROAD
EAST LANSING, MI. 48823
PHONE: (517)316.3963 FAX: (517)484.8140

MARK	DATE	DESCRIPTION	BY
1	6/22/21	ISSUED FOR BIDS	

CITY OF FLINT, MICHIGAN
FLINT WPC GRIT BAT "B" SYSTEM & PRIMARY TANKS IMPROVEMENTS

ELECTRICAL
MCC-XP2A, MCC-70 ONE-LINE DIAGRAMS - PROPOSED WORK

PROJ:	200-156238-21001
DESN:	GCJ
DRWN:	JLS
CHKD:	GCJ

E-107
OF 46

Copyright: Tetra Tech

Bar Measures 1 inch, otherwise drawing not to scale

6/21/2021 3:47:20 PM - \\TT.LOCAL\IER\PROJECTS\LANSING\IER\156238\200-156238-21001\CAD\SHEETFILES\E-107_MCC-XP2A & 70 ONELINE_III.DWG - SHANK, JASON

CONTINUED ON NEXT SHEET

480V, 1200A HORIZONTAL BUS, 3Ø, 3 W, 85,000A, RMS SYM. BRACING

40A

2"C(4#8)

NEMA 7 RATED (TYP.)

1"C(12#14)	1"C(2-2/C#16SH) GPP GPP	XP2 A37	2 HP	GATE F1-52
2"C(4#8)	1"C(12#14)	XP2 A36	2 HP	GATE F1-51
2"C(4#8)	1"C(12#14)	XP2 A35	2 HP	GATE F1-50
2"C(4#8)	1"C(12#14)	XP2 A34	2 HP	GATE F1-49
2"C(4#8)	1"C(12#14)	XP2 A33	2 HP	GATE F1-48
2"C(4#8)	1"C(12#14)	XP2 A32	2 HP	GATE F1-47
2"C(4#8)	1"C(12#14)	XP2 A31	2 HP	GATE F1-46
2"C(4#8)	1"C(12#14)	XP2 A30	2 HP	GATE F1-45

JB C 30A 1"C(4#10) 2"C(4#8)

1/4" X 1" MIN. GROUND BUS

FROM PREVIOUS SHEET

MOTOR CONTROL CENTER - XP2A (MCC-XP2A) PROPOSED WORK - CONTINUED

NEMA 12 ENCLOSURE
LOCATED IN GRIT-A BUILDING UPPER LEVEL.

CONTINUED ON NEXT SHEET

480V, 600A HORIZONTAL BUS, 3Ø, 3 W, 65,000A, RMS SYM. BRACING

100A

2"C(4#1)

C VFD 100A VFD RATED 75HP 2"C(4#1) 100A

70 32 2"C(4#1)

40 HP — GRIT PUMP NO.4 (SC-404)

1"C(2 DUPLEX MULTIMODE 50 MICRON FIBER OPTIC CABLE)
1"C(3/C#16SH)
1"C(10#14)
1"C(24#14)
1"C(2-2/C#16SH)
2"C(6#12,30#14)
1"C(6#14)

GIOP-1 SPEED POT IN NEMA 4 ENCLOSURE
GIOP-1
GIOP-1
P T T T P

ADD AUXILIARY CONTACT FOR DISCONNECT SWITCH. SEE WIRING DIAGRAMS FOR ADDITIONAL INFORMATION. PROVIDE WARNING SIGN INDICATING "DO NOT OPEN UNDER LOAD". RED BACKGROUND, YELLOW LETTERING. (TYP.)

100A	2"C(4#1)	70 31 2"C(4#1)	40 HP — GRIT PUMP NO.3 (SC-403)
100A	2"C(4#1)	70 30 2"C(4#1)	40 HP — GRIT PUMP NO.2 (SC-402)
100A	2"C(4#1)	70 29 2"C(4#1)	40 HP — GRIT PUMP NO.1 (SC-401)

VFD RATED 50HP

NEMA 4 RATED

1/4" X 1" MIN. GROUND BUS

FROM PREVIOUS SHEET

MOTOR CONTROL CENTER - 70 (MCC-70) PROPOSED WORK - CONTINUED

NEMA 12 ENCLOSURE
LOCATED IN GRIT-B NEW ELECTRICAL ROOM.
(SEE NOTES)

TETRA TECH
www.tetratech.com
3497 COOLIDGE ROAD
EAST LANSING, MI. 48823
PHONE: (517)316.3963 FAX: (517)484.8140

MARK	DATE	DESCRIPTION	BY
1	6/22/21	ISSUED FOR BIDS	

CITY OF FLINT, MICHIGAN
FLINT WPC GRIT BAT "B" SYSTEM & PRIMARY TANKS IMPROVEMENTS

ELECTRICAL
MCC-XP2A, MCC-70 ONE-LINE DIAGRAMS - PROPOSED WORK

PROJ:	200-156238-21001
DESN:	GCJ
DRWN:	JLS
CHKD:	GCJ

E-108
OF 46

Copyright: Tetra Tech

Bar Measures 1 inch, otherwise drawing not to scale

6/21/2021 3:47:23 PM - \\TT.LOCAL\IER\PROJECTS\LANSING\IER\156238\200-156238-21001\CAD\SHEETFILES\E-108_MCC-XP2A & 70 ONELINE_JV.DWG - SHANK, JASON

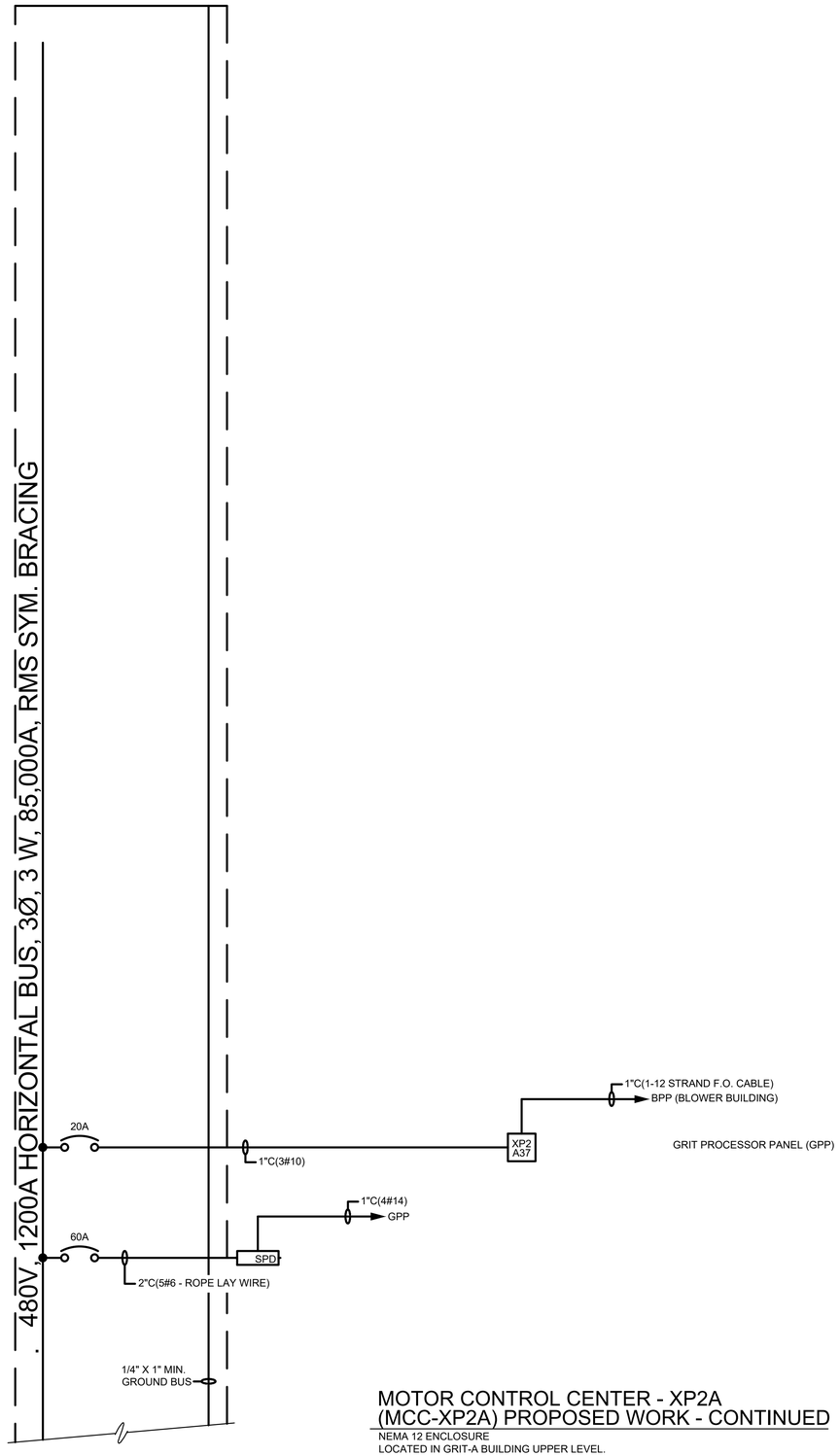

MOTOR CONTROL CENTER - XP2A (MCC-XP2A) PROPOSED WORK - CONTINUED

NEMA 12 ENCLOSURE
LOCATED IN GRIT-A BUILDING UPPER LEVEL.

CONTINUED ON NEXT SHEET

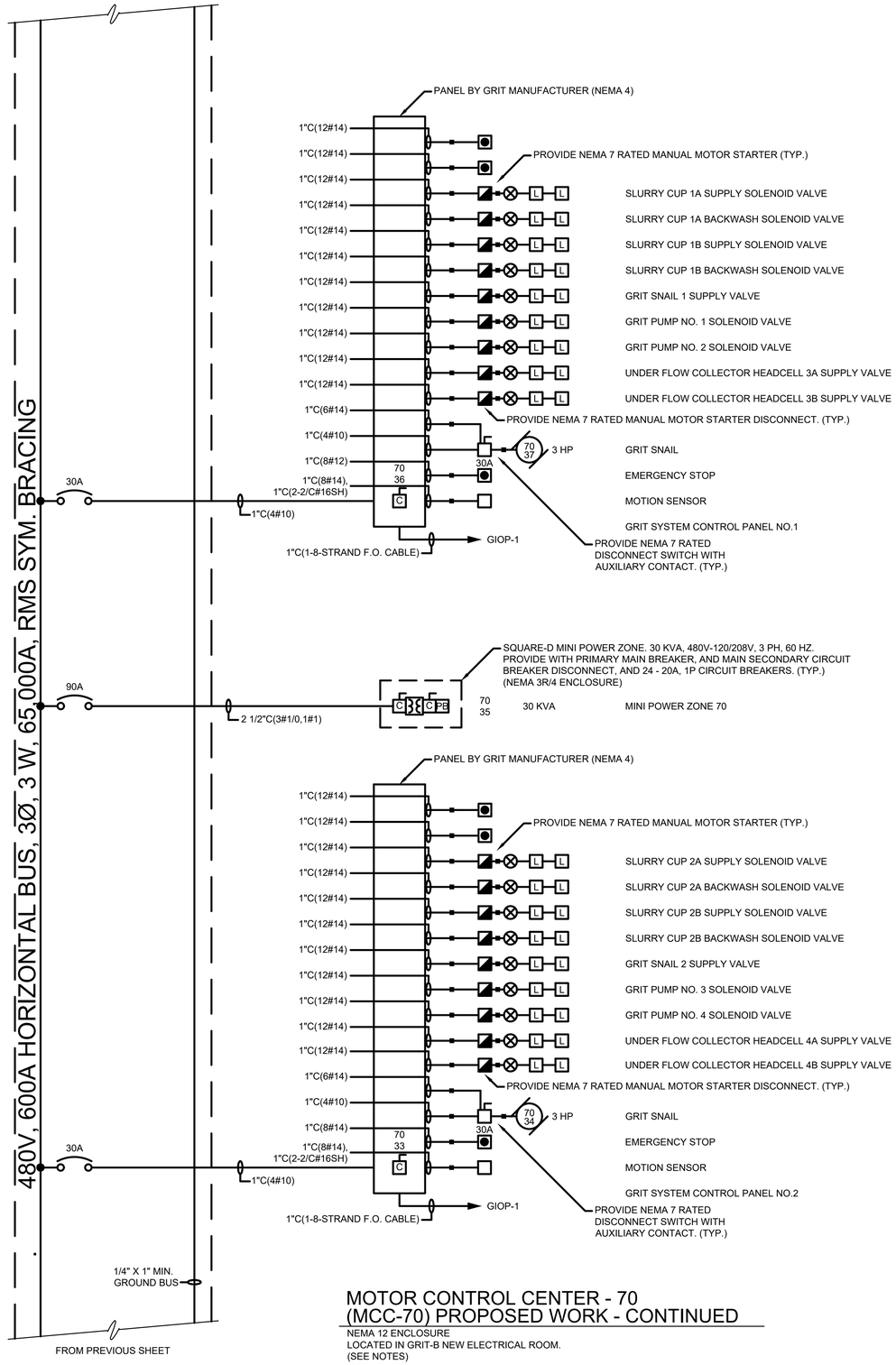

FROM PREVIOUS SHEET

MOTOR CONTROL CENTER - 70 (MCC-70) PROPOSED WORK - CONTINUED

NEMA 12 ENCLOSURE
LOCATED IN GRIT-B NEW ELECTRICAL ROOM.
(SEE NOTES)

TETRA TECH
www.tetratech.com
3497 COOLIDGE ROAD
EAST LANSING, MI. 48823
PHONE: (517)316.3963 FAX: (517)484.8140

MARK	DATE	DESCRIPTION	BY
1	6/22/21	ISSUED FOR BIDS	

CITY OF FLINT, MICHIGAN

FLINT WPC GRIT BAT "B" SYSTEM & PRIMARY TANKS IMPROVEMENTS

ELECTRICAL

MCC-XP2A, MCC-70 ONE-LINE DIAGRAMS - PROPOSED WORK

PROJ:	200-156238-21001
DESN:	GCJ
DRWN:	JLS
CHKD:	GCJ

E-109

OF 46

Copyright: Tetra Tech

Bar Measures 1 inch, otherwise drawing not to scale

6/21/2021 3:47:27 PM - \\TT.LOCAL\IER\PROJECTS\LANSING\IER\156238\200-156238-210011\CAD\SHEETFILES\E\E-109_MCC-XP2A & 70 ONELINE_V.DWG - SHANK, JASON

CONTINUED ON NEXT SHEET

480V, 600A HORIZONTAL BUS, 3Ø, 3 W, 65,000A, RMS SYM. BRACING

90A — 2 1/2"C(3#1/0,1#1) — SQUARE-D MINI POWER ZONE. 30 KVA, 480V-120/208V, 3 PH, 60 HZ. PROVIDE WITH PRIMARY MAIN BREAKER, AND MAIN SECONDARY CIRCUIT BREAKER DISCONNECT, AND 24 - 20A, 1P CIRCUIT BREAKERS. (TYP.) (NEMA 3R/4 ENCLOSURE)
70 45 — 30 KVA — MINI POWER ZONE 70-1

20A — SPARE

20A — SPARE

20A — SPARE

20A — SPARE

20A — SPARE

30A — SPARE

30A — 1"C(4#10) — 20A CB — VFD — 30A — 70 39 — 2 HP — FINE SCREEN NO.2 (SC-405)
1"C(2-DUPLEX MULTIMODE 50MICRON FIBER OPTIC CABLE)
1 1/2"C(3#12, 20#14)
1"C(3/C#16SH)
1"C(2-2/C#16SH)
1"C(20#14)
GIOP-1
GIOP-1
GIOP-1
SPEED POT
1 1/2"C(3#12,23#14)
1"C(3#14)
1"C(4#10) — VFD RATED NEMA 4 5 HP
FURNISH AUX. CONTACT IN DISCONNECT SWITCH (TYP.)
FURNISH, AND INSTALL NEMA 7 RATED PUSHBUTTON CONTROL STATIONS, AND SPEED POT/ENCLOSURE. (TYP.)
FURNISH, AND INSTALL NEMA 7 RATED PUSHBUTTON CONTROL STATIONS, AND SPEED POT/ENCLOSURE. (TYP.)
NEMA 7 RATED DISCONNECT SWITCH

30A — 1"C(4#10) — 20A CB — VFD — 30A — 70 38 — 2 HP — FINE SCREEN NO.1 (SC-400)
1"C(2-DUPLEX MULTIMODE 50MICRON FIBER OPTIC CABLE)
1 1/2"C(3#12, 20#14)
1"C(3/C#16SH)
1"C(2-2/C#16SH)
1"C(20#14)
GIOP-1
GIOP-1
GIOP-1
SPEED POT
1 1/2"C(3#12, 24#14)
1"C(3#14)
1"C(4#10) — VFD RATED NEMA 4 5 HP
FURNISH AUX. CONTACT IN DISCONNECT SWITCH (TYP.)
FURNISH, AND INSTALL NEMA 7 RATED PUSHBUTTON CONTROL STATIONS, AND SPEED POT/ENCLOSURE. (TYP.)
FURNISH, AND INSTALL NEMA 7 RATED PUSHBUTTON CONTROL STATIONS, AND SPEED POT/ENCLOSURE. (TYP.)
NEMA 7 RATED DISCONNECT SWITCH

1/4" X 1" MIN. GROUND BUS

FROM PREVIOUS SHEET

MOTOR CONTROL CENTER - 70 (MCC-70) PROPOSED WORK - CONTINUED

NEMA 12 ENCLOSURE
LOCATED IN GRIT-B NEW ELECTRICAL ROOM.

TETRA TECH
www.tetratech.com
3497 COOLIDGE ROAD
EAST LANSING, MI. 48823
PHONE: (517)316.3953 FAX: (517)484.8140

MARK	DATE	DESCRIPTION	BY
1	6/22/21	ISSUED FOR BIDS	

CITY OF FLINT, MICHIGAN
FLINT WPC GRIT BAT "B" SYSTEM & PRIMARY TANKS IMPROVEMENTS
ELECTRICAL
MCC-70 ONE-LINE DIAGRAM - PROPOSED WORK

PROJ:	200-156238-21001
DESN:	GCJ
DRWN:	JLS
CHKD:	GCJ

E-110
OF 46

Copyright: Tetra Tech

Bar Measures 1 inch, otherwise drawing not to scale

6/21/2021 3:47:30 PM - \\TT.LOCAL\IER\PROJECTS\LANSING\IER\156238\200-156238-210011\CAD\SHEETFILES\E\E-110_MCC-70 ONELINE_VI.DWG - SHANK, JASON

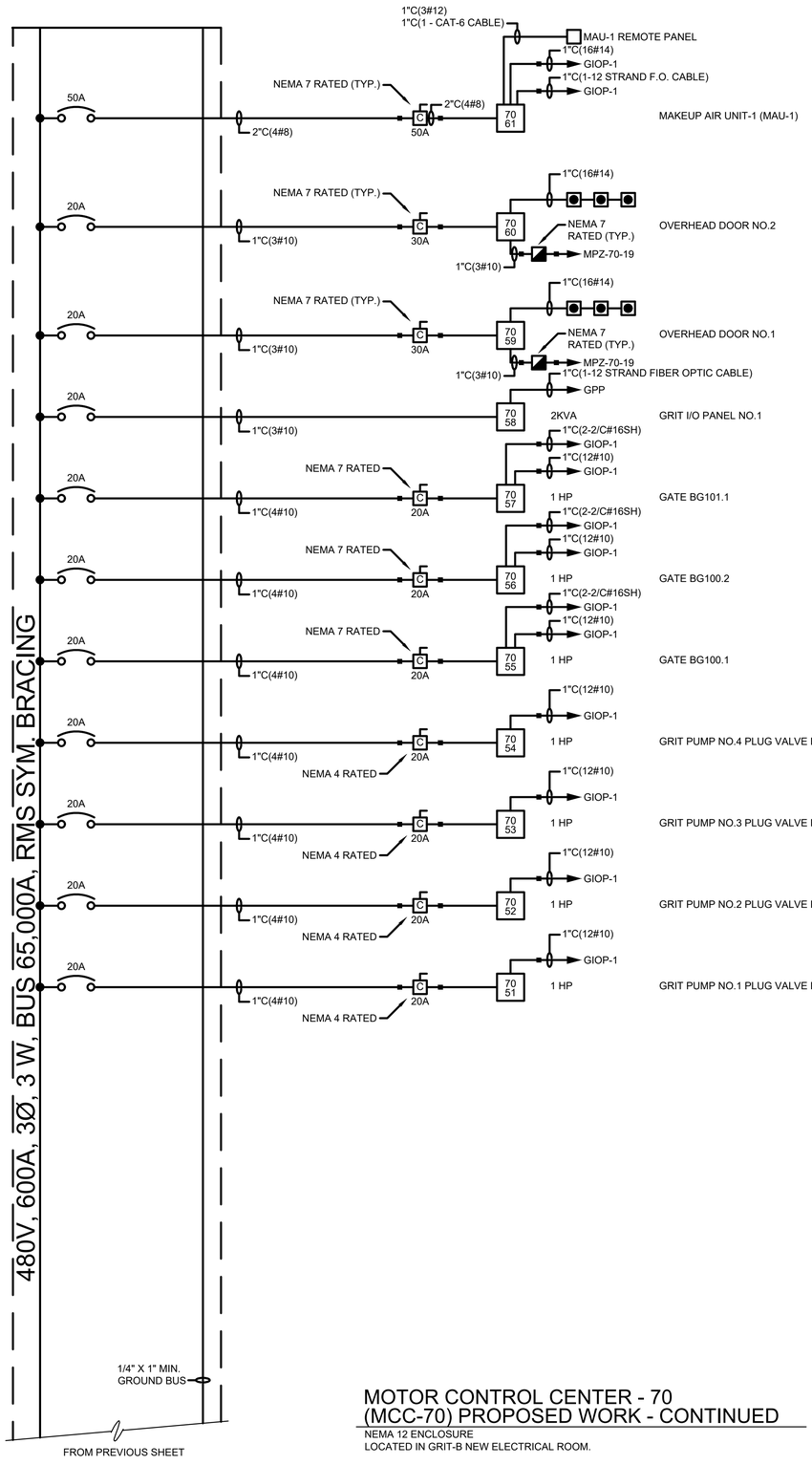

MOTOR CONTROL CENTER - 70 (MCC-70) PROPOSED WORK - CONTINUED

NEMA 12 ENCLOSURE
LOCATED IN GRIT-B NEW ELECTRICAL ROOM.

TETRA TECH
www.tetratech.com
3497 COOLIDGE ROAD
EAST LANSING, MI. 48823
PHONE: (517)316.3963 FAX: (517)484.8140

MARK	DATE	DESCRIPTION	BY
1	6/22/21	ISSUED FOR BIDS	

CITY OF FLINT, MICHIGAN
FLINT WPC GRIT BAT "B" SYSTEM & PRIMARY TANKS IMPROVEMENTS
ELECTRICAL
MCC-70 ONE-LINE DIAGRAM - PROPOSED WORK

PROJ:	200-156238-21001
DESN:	GCJ
DRWN:	JLS
CHKD:	GCJ

E-111
OF 46

Copyright: Tetra Tech

6/21/2021 3:47:33 PM - \\TT.LOCAL\ER\PROJECTS\LANSING\ER\156238\200-156238-21001\CAD\SHEETFILES\E\E-111_MCC-70 ONELINE_V#.DWG - SHANK, JASON

Bar Measures 1 inch, otherwise drawing not to scale

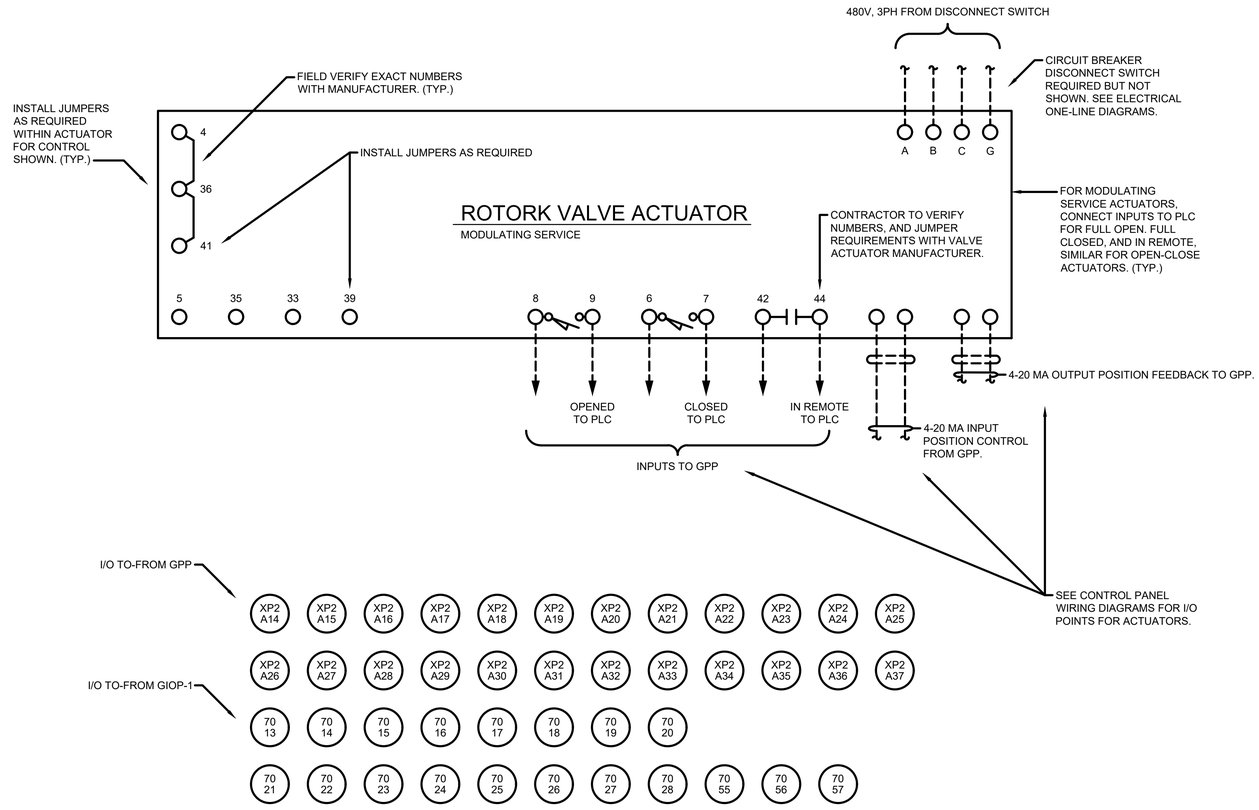

MOTORIZED MODULATING VALVE ACTUATOR - WIRING DIAGRAM

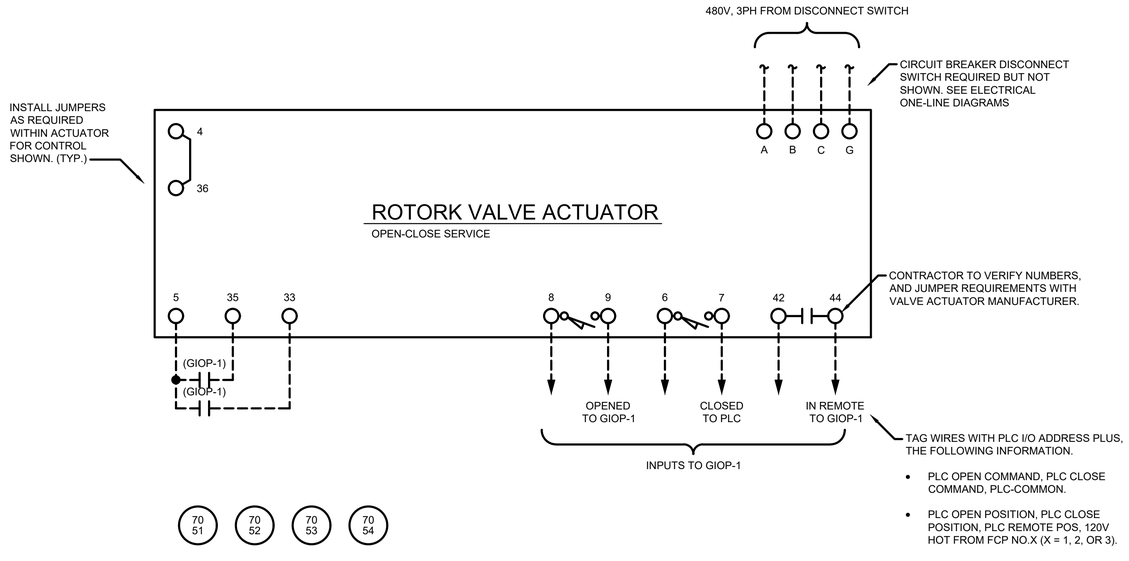

MOTORIZED OPEN-CLOSED VALVE ACTUATOR - WIRING DIAGRAM (TYP.)

TETRA TECH
www.tetratech.com
3497 COOLIDGE ROAD
EAST LANSING, MI. 48823
PHONE: (517)316.3963 FAX: (517)484.8140

MARK	DATE	DESCRIPTION	BY
1	6/22/21	ISSUED FOR BIDS	

CITY OF FLINT, MICHIGAN

FLINT WPC GRIT BAT "B" SYSTEM & PRIMARY TANKS IMPROVEMENTS

ELECTRICAL WIRING DIAGRAMS PROPOSED WORK

PROJ:	200-156238-21001
DESN:	GCJ
DRWN:	JLS
CHKD:	GCJ

E-200

OF 46

Copyright: Tetra Tech

6/21/2021 3:47:37 PM - \\TT.LOCAL\ER\PROJECTS\LANSING\ER\156238\200-156238-21001\CAD\SHEETFILES\E\E-200_WIR DIA.DWG - SHANK, JASON

Bar Measures 1 inch, otherwise drawing not to scale

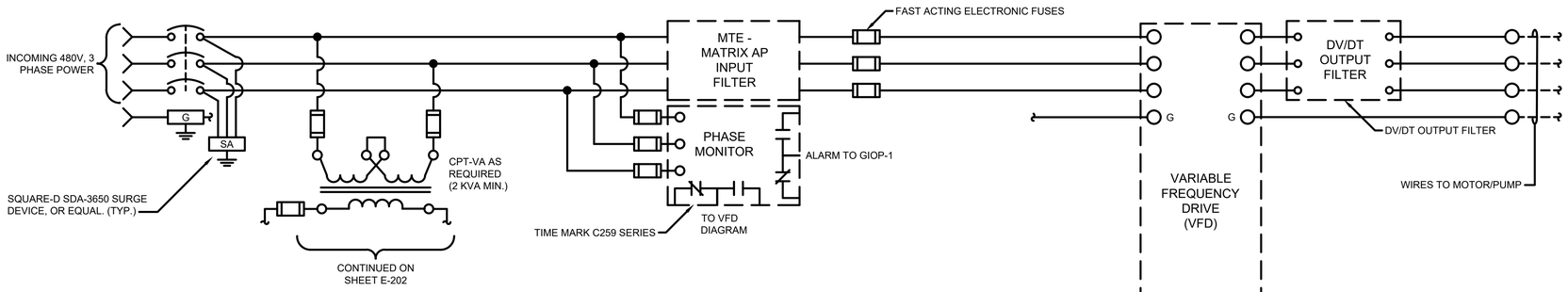

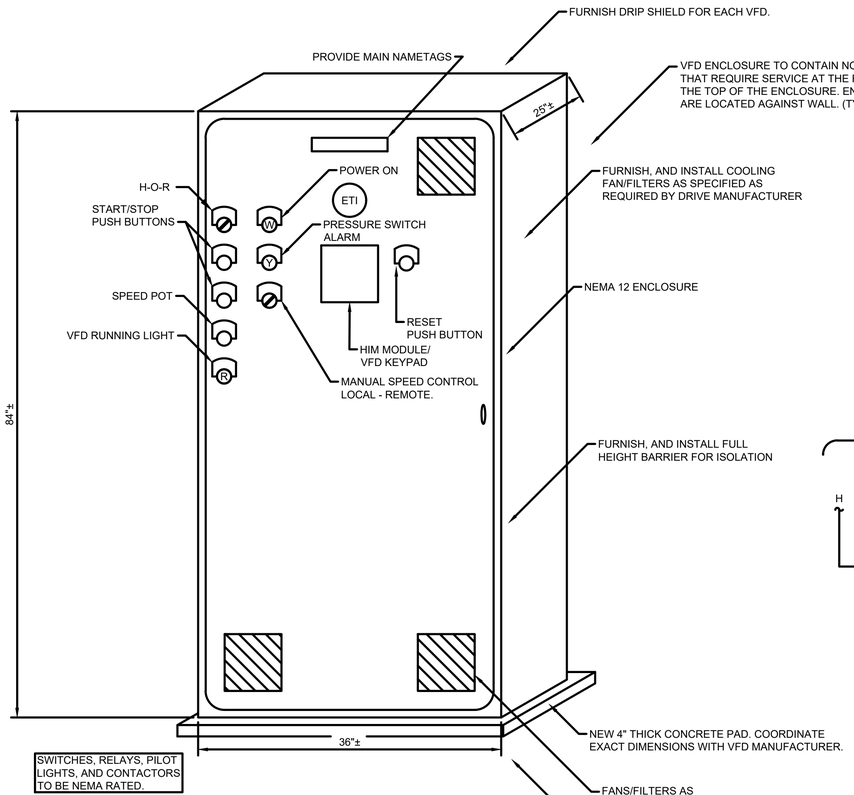

VARIABLE FREQUENCY DRIVE LAYOUT NEMA 3R/4 ENCLOSURE

NO SCALE

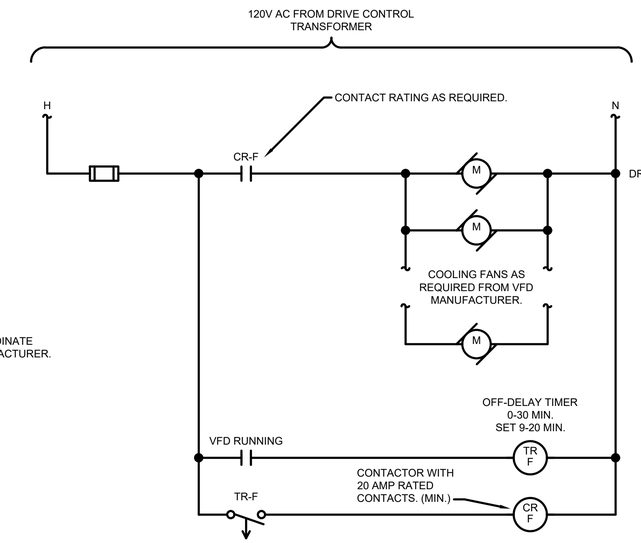

TYPICAL VFD - PARTIAL WIRING DIAGRAM COOLING FANS

(TYP. FOR EXHAUST FANS. DRIVES SHOWN ON THIS SHEET)

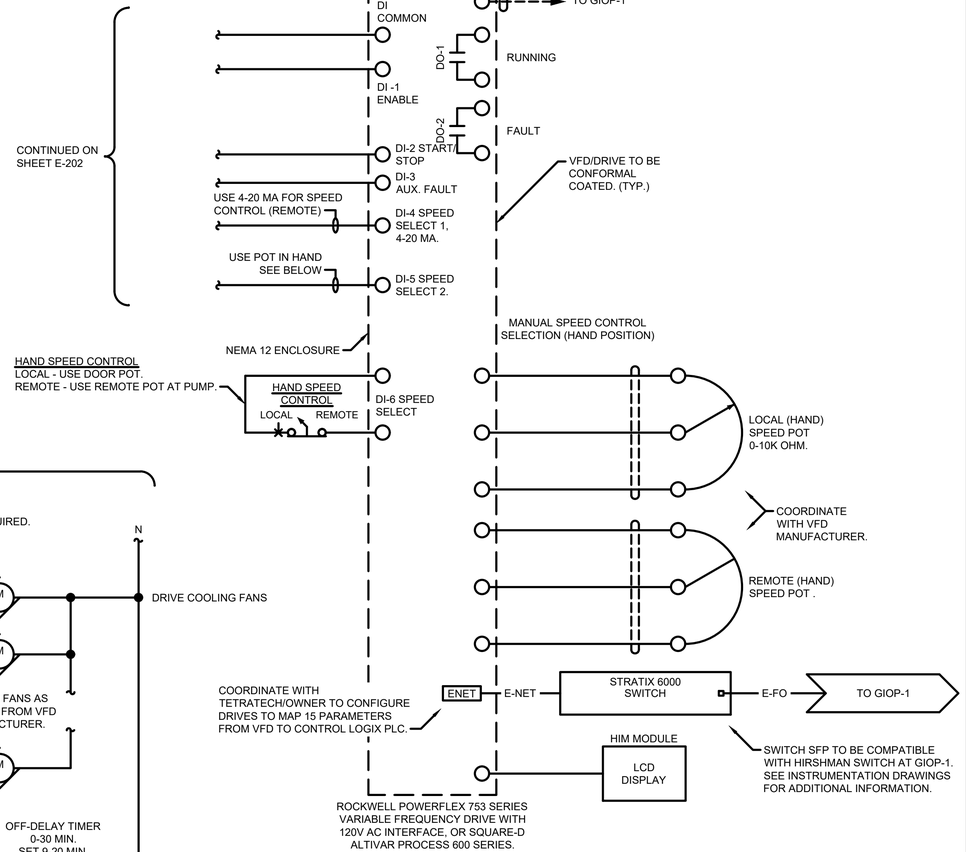

70 25 | 70 26 | 70 27 | 70 28

TETRA TECH
www.tetratech.com
3497 COOLIDGE ROAD
EAST LANSING, MI. 48823
PHONE: (517)316.3963 FAX: (517)484.8140

MARK	DATE	DESCRIPTION	BY
1	6/22/21	ISSUED FOR BIDS	

CITY OF FLINT, MICHIGAN

FLINT WPC GRIT BAT "B" SYSTEM & PRIMARY TANKS IMPROVEMENTS

ELECTRICAL WIRING DIAGRAMS PROPOSED WORK

PROJ:	200-156238-21001
DESN:	GCJ
DRWN:	JLS
CHKD:	GCJ

E-201

OF 46

Copyright: Tetra Tech

6/21/2021 3:47:40 PM - \\TT.LOCAL\IER\PROJECTS\LANSING\IER\156238\200-156238-210011\CAD\SHEETFILES\E\E-201_WIR DIA_II.DWG - SHANK, JASON

Bar Measures 1 inch, otherwise drawing not to scale

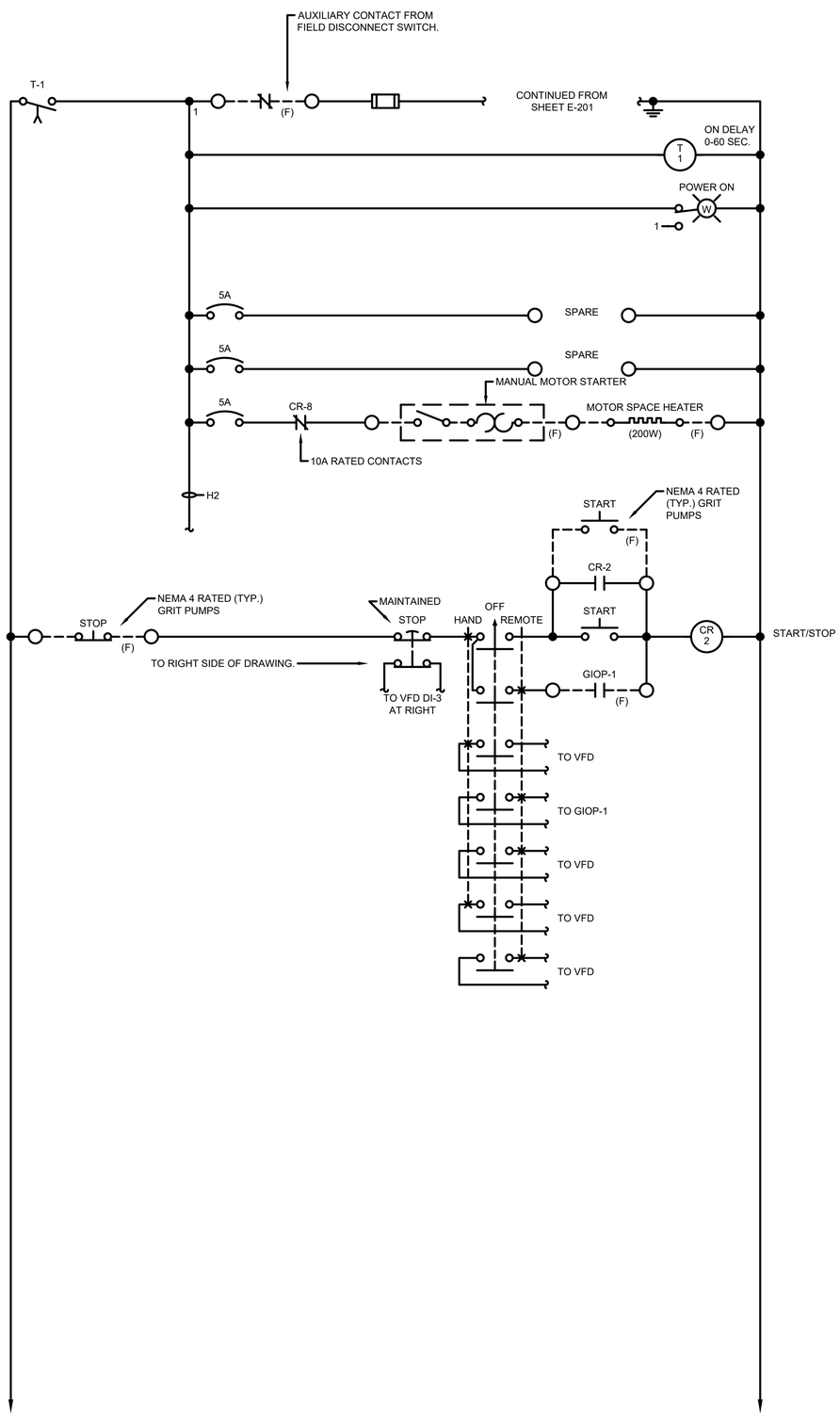

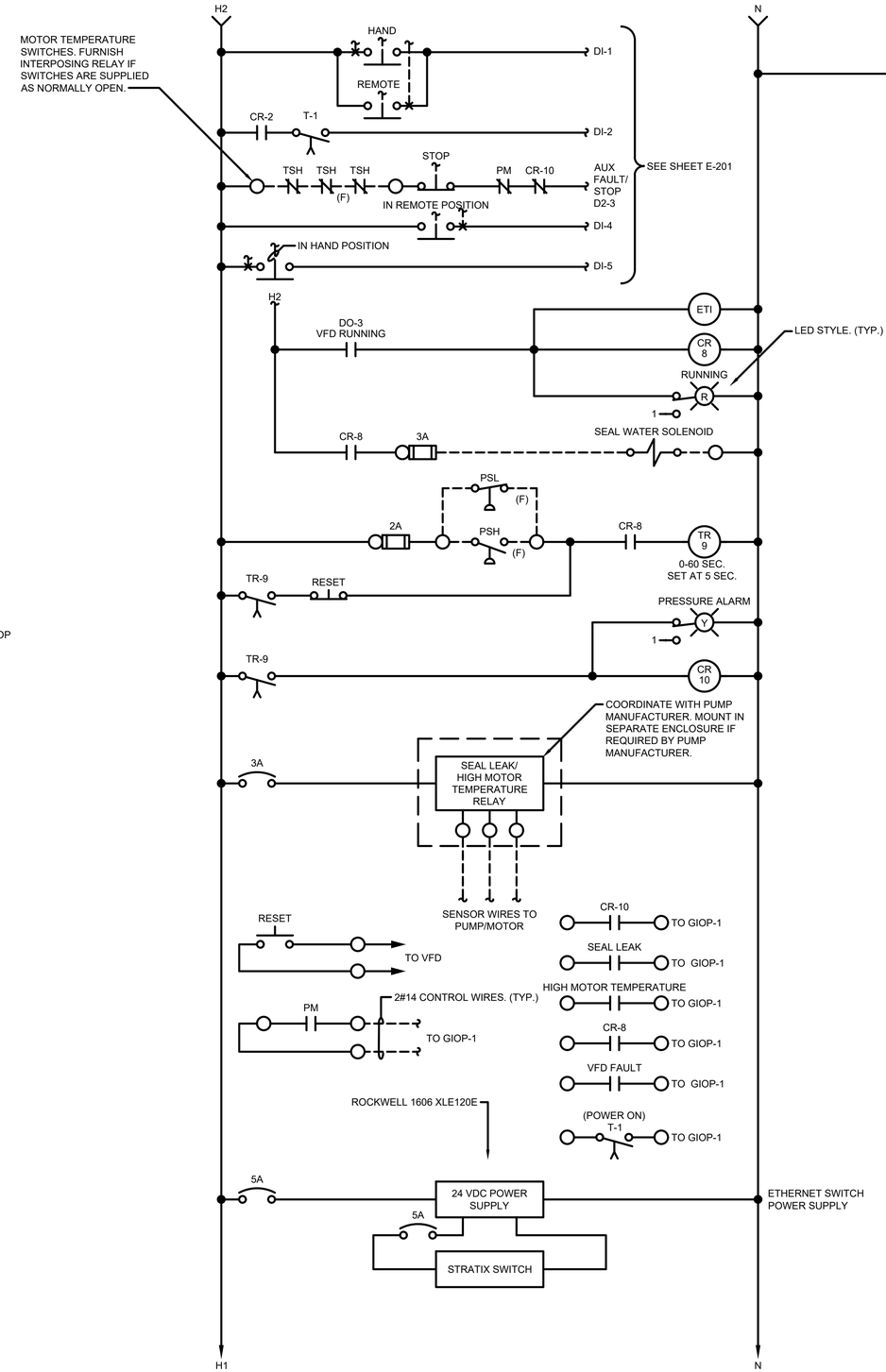

TETRA TECH
www.tetratech.com
3497 COOLIDGE ROAD
EAST LANSING, MI. 48823
PHONE: (517)316.3963 FAX: (517)484.8140

MARK	DATE	DESCRIPTION	BY
1	6/22/21	ISSUED FOR BIDS	

CITY OF FLINT, MICHIGAN

FLINT WPC GRIT BAT "B" SYSTEM & PRIMARY TANKS IMPROVEMENTS

ELECTRICAL WIRING DIAGRAMS PROPOSED WORK

PROJ:	200-156238-21001
DESN:	GCJ
DRWN:	JLS
CHKD:	GCJ

E-202

OF 46

Copyright: Tetra Tech

6/21/2021 3:47:43 PM - \\TT-LOCAL\IER\PROJECTS\LANSING\IER\156238\200-156238-21001\CAD\SHEETFILES\E\E-202_WIR DIA_III.DWG - SHANK, JASON

Bar Measures 1 inch, otherwise drawing not to scale

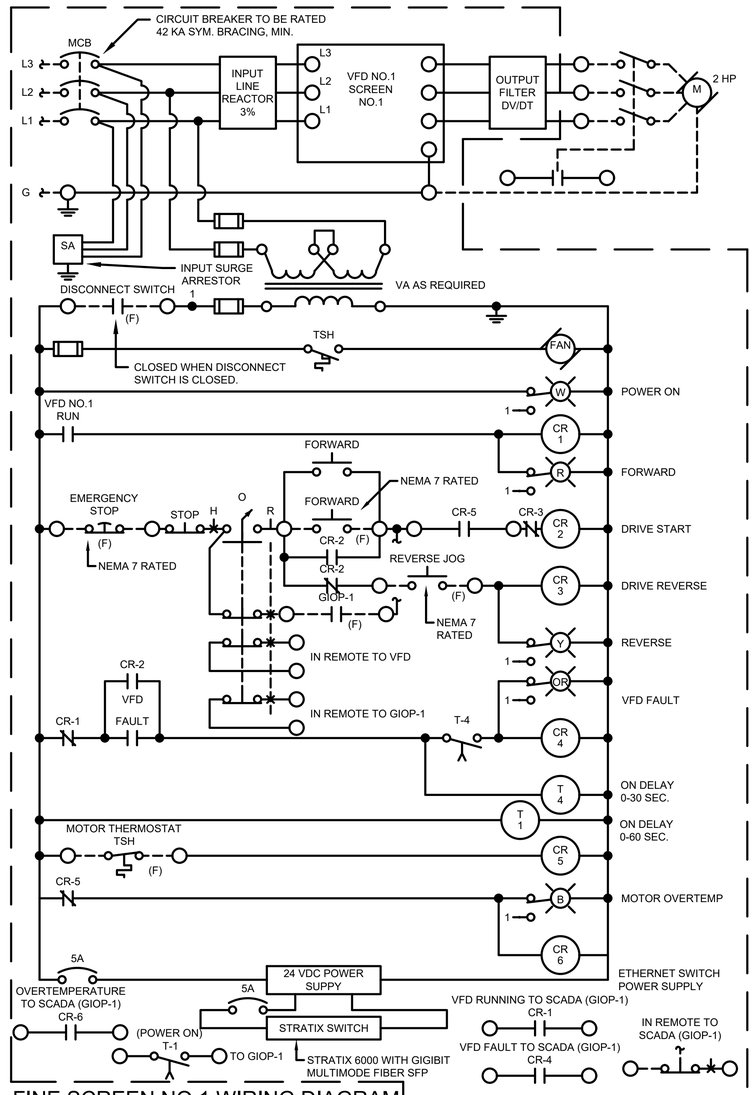

FINE SCREEN NO.1 WIRING DIAGRAM

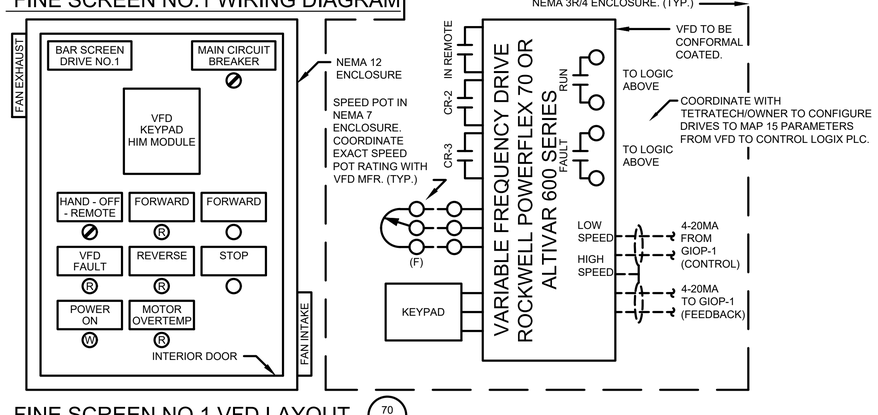

FINE SCREEN NO.1 VFD LAYOUT (70 42)

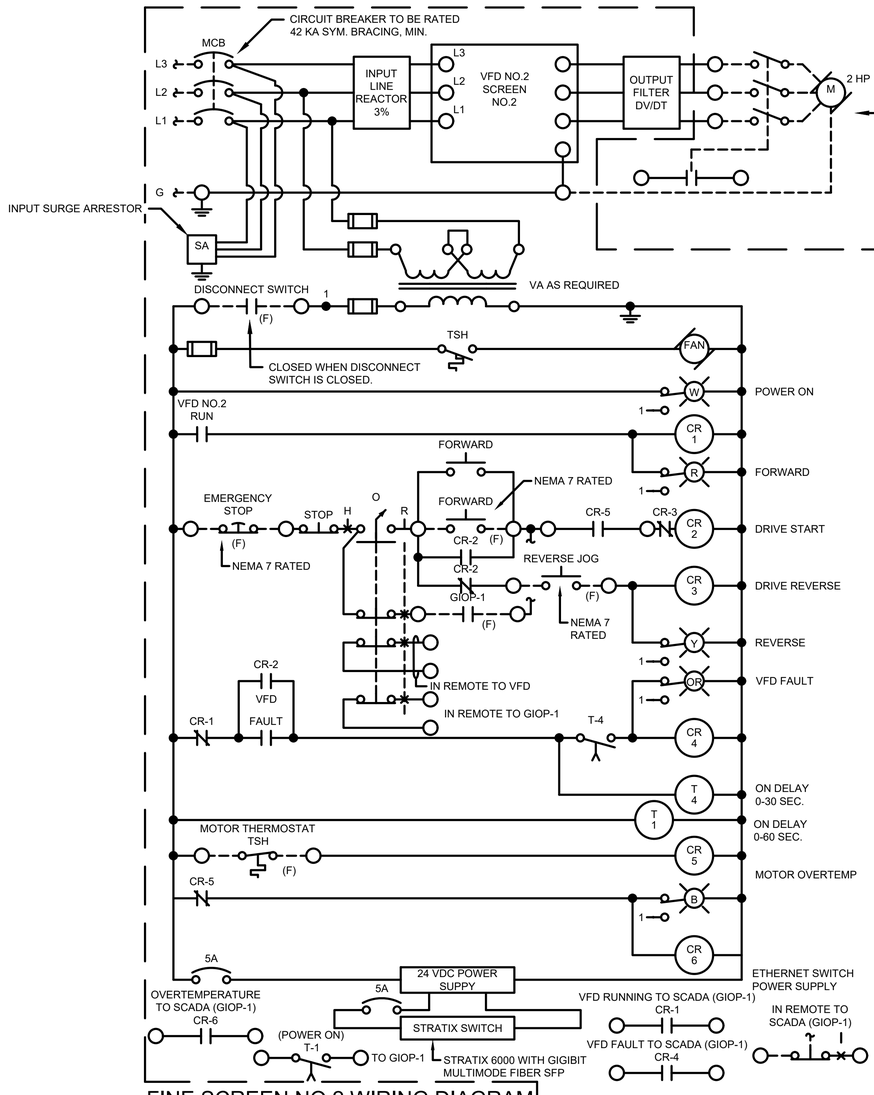

FINE SCREEN NO.2 WIRING DIAGRAM

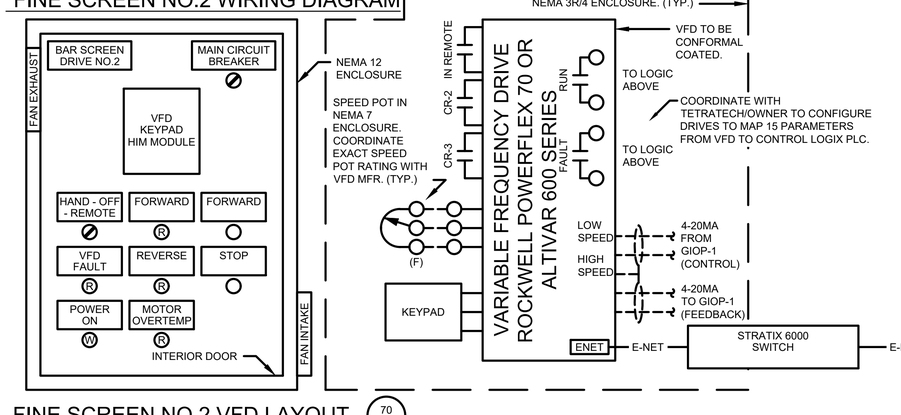

FINE SCREEN NO.2 VFD LAYOUT (70 43)

TETRA TECH
www.tetratech.com
3497 COOLIDGE ROAD
EAST LANSING, MI. 48823
PHONE: (517)316.3963 FAX: (517)484.8140

MARK	DATE	DESCRIPTION	BY
1	6/22/21	ISSUED FOR BIDS	

CITY OF FLINT, MICHIGAN

FLINT WPC GRIT BAT "B" SYSTEM & PRIMARY TANKS IMPROVEMENTS

ELECTRICAL WIRING DIAGRAMS PROPOSED WORK

PROJ:	200-156238-21001
DESN:	GCJ
DRWN:	JLS
CHKD:	GCJ

E-203

OF 46

Copyright: Tetra Tech

Bar Measures 1 inch, otherwise drawing not to scale

6/21/2021 3:47:47 PM - \\TT.LOCAL\ERIPROJECTS\LANSING\ER\156238\200-156238-21001\CAD\SHEETFILES\E-203_WIR DIA_IV.DWG - SHANK, JASON

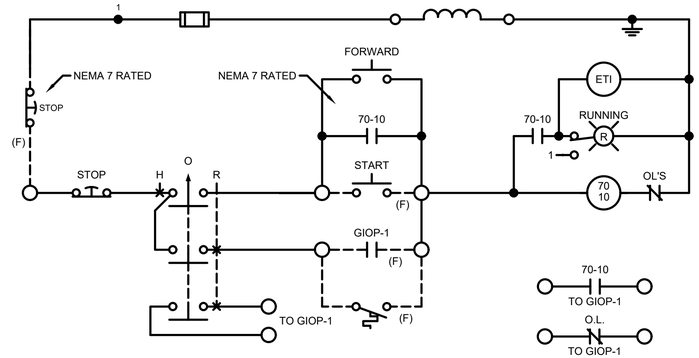

EXHAUST FAN NO.1 (ADDITION)

ROCKWELL/CONTRACTOR TO PROVIDE I/O AS SHOWN. (TYP.)

70 10

70 12

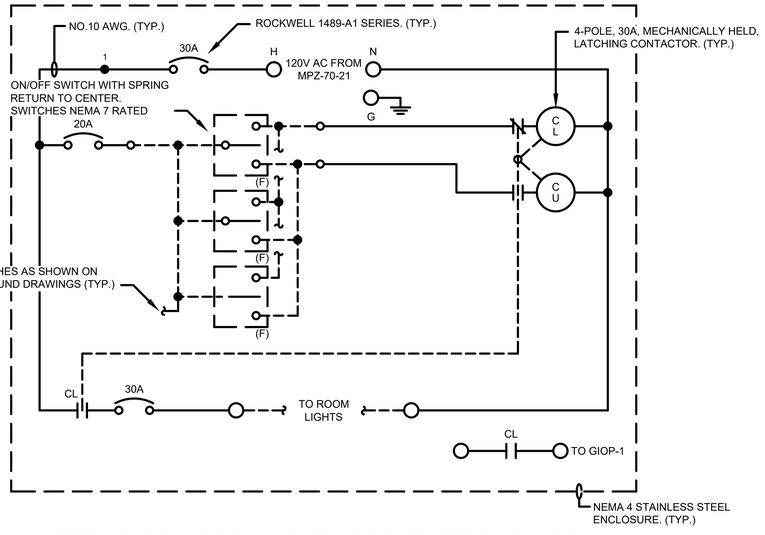

GRIT LOADING ROOM LIGHTING CONTACTOR NO.1 (LC-1)

UNLOADING ROOM LIGHTS

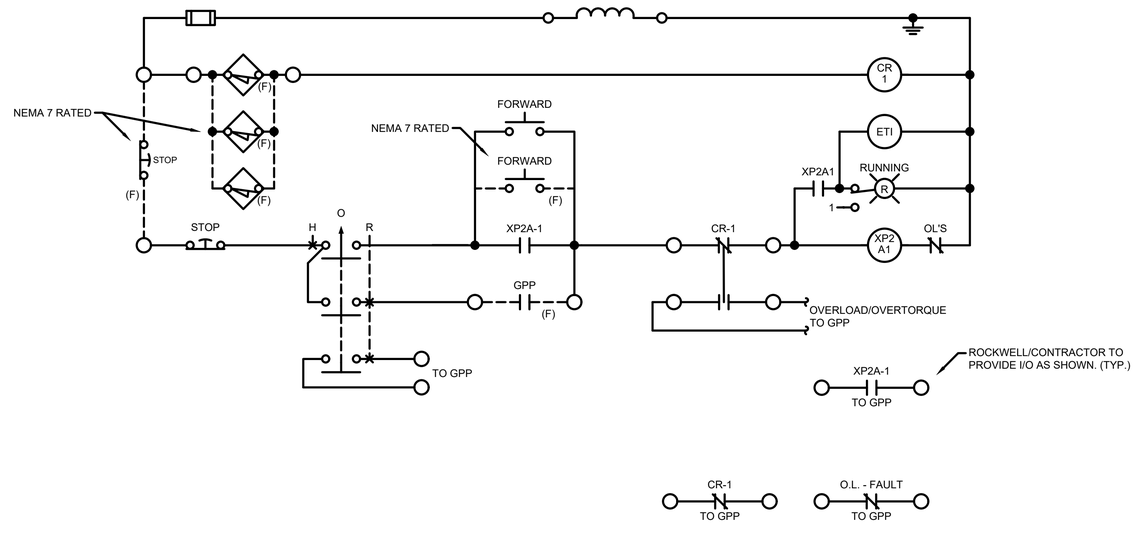

SLUDGE COLLECTOR MECHANISM, SLUDGE CROSS COLLECTOR MECHANISM

I/O - GPP (TYP.)

XP2 A1 | XP2 A2 | XP2 A3 | XP2 A4 | XP2 A5 | XP2 A6

XP2 A7 | XP2 A8 | XP2 A9 | XP2 A10 | XP2 A11 | XP2 A12

I/O - GIOP-1 (TYP.)

70 2 | 70 3 | 70 4 | 70 5

70 6 | 70 7 | 70 8 | 70 9

TETRA TECH
www.tetratech.com
3497 COOLIDGE ROAD
EAST LANSING, MI. 48823
PHONE: (517)316.3953 FAX: (517)484.8140

MARK	DATE	DESCRIPTION	BY
1	6/22/21	ISSUED FOR BIDS	

CITY OF FLINT, MICHIGAN

FLINT WPC GRIT BAT "B" SYSTEM & PRIMARY TANKS IMPROVEMENTS

ELECTRICAL WIRING DIAGRAMS PROPOSED WORK

PROJ:	200-156238-21001
DESN:	GCJ
DRWN:	JLS
CHKD:	GCJ

E-204

OF 46

Copyright: Tetra Tech

Bar Measures 1 inch, otherwise drawing not to scale

6/21/2021 3:47:50 PM - \\TT.LOCAL\IER\PROJECTS\LANSING\IER\156238\200-156238-21001\CAD\SHEETFILES\E\E-204_WIR DIA_V.DWG - SHANK, JASON

NEMA 3R/4 STAINLESS STEEL ENCLOSURE.

PANELBOARD - MPZ-70

VOLTAGE: 120/208V, 3PH
BUS RATING: 100A

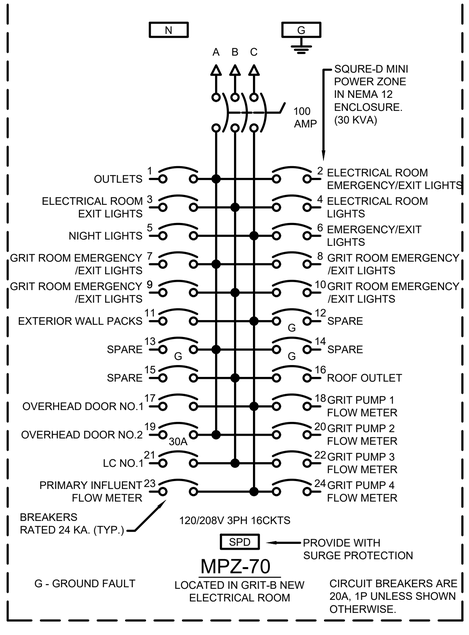

MPZ-70

G - GROUND FAULT

LOCATED IN GRIT-B NEW ELECTRICAL ROOM

CIRCUIT BREAKERS ARE 20A, 1P UNLESS SHOWN OTHERWISE.

NEMA 3R/4 STAINLESS STEEL ENCLOSURE.

PANELBOARD - MPZ-70-1

VOLTAGE: 120/208V, 3PH
BUS RATING: 100A

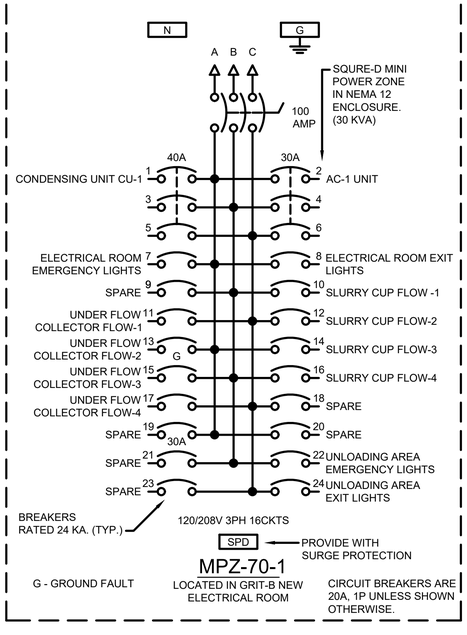

MPZ-70-1

G - GROUND FAULT

LOCATED IN GRIT-B NEW ELECTRICAL ROOM

CIRCUIT BREAKERS ARE 20A, 1P UNLESS SHOWN OTHERWISE.

PANELBOARD SCHEDULE

TETRA TECH
www.tetratech.com
3497 COOLIDGE ROAD
EAST LANSING, MI. 48823
PHONE: (517)316.3953 FAX: (517)484.8140

MARK	DATE	DESCRIPTION	BY
1	6/22/21	ISSUED FOR BIDS	

CITY OF FLINT, MICHIGAN

FLINT WPC GRIT BAT "B" SYSTEM & PRIMARY TANKS IMPROVEMENTS

ELECTRICAL PANELBOARD SCHEDULE

PROJ:	200-156238-21001
DESN:	GCJ
DRWN:	JLS
CHKD:	GCJ

E-205

OF 46

Copyright: Tetra Tech

Bar Measures 1 inch, otherwise drawing not to scale

6/21/2021 3:47:53 PM - \\TT.LOCAL\IER\PROJECTS\LANSING\IER\156238\200-156238-21001\CAD\SHEETFILES\E\E-205_PANELBOARD SCHEDULES.DWG - SHANK, JASON

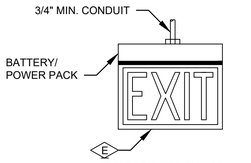

EXIT SIGN

SCALE: NONE

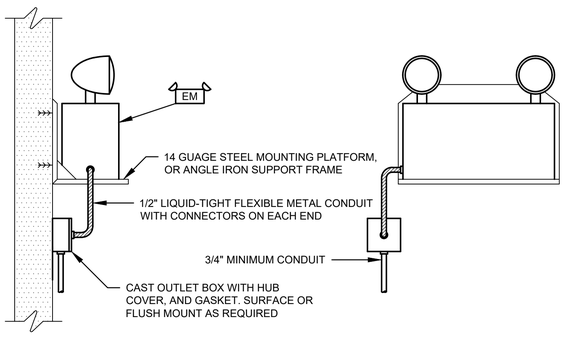

EMERGENCY LIGHT MOUNTING DETAIL

NO SCALE

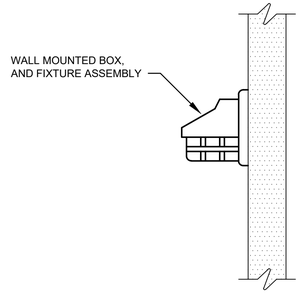

VAPORTIGHT OR WEATHERPROOF FIXTURE WALL MOUNTING DETAIL

NO SCALE

FURNISH 10 YEAR MANUFACTURER WARRANTY (MINIMUM) ON FIXTURE TYPES, AND ASSOCIATED COMPONENTS.



F - NEMA 7 AREAS, APPLETON - CODE MASTER LED SEALED LUMINAIRE, CM LED SERIES, PENDANT MOUNTED, 250W EQUIVALENT LIGHT LEVEL, 1 INCH HUB SIZE, CLEAR GLOBE, 120V AC WITH GUARD OR CROUSE-HINDS EQUIVALENT.



EM - LITHONIA ELM2-LED, 120V AC POWERED, WHITE HOUSING. NEMA 12, NEMA 4 AREAS.



E - HUBBELL DUAL LITE SEWL SERIES SRWE4X, 120V AC, NEMA 4/4X RATED, AND SUITABLE FOR INSTALLATION IN WET LOCATIONS. NEMA 12, NEMA 4 AREAS. PROVIDE WITH BATTERIES



EM - EMERGENCY FIXTURE - 120V AC POWERED, NEMA 7 AREAS APPLETON ELS SERIES OR CROUSE-HINDS EQUAL, 2 FIXTURES, 28W PER LAMP, 12V DC, WITH FIXTURE GUARD. PROVIDE WITH BATTERIES.



E - EXIT FIXTURE - 120V AC POWERED, NEMA 7 AREAS, APPLETON ELS SERIES OR CROUSE-HINDS EQUAL. PROVIDE WITH BATTERIES



A - LITHONIA LED STRIP LIGHT - 120V AC, NEMA 4 RATED IN-LINE FUSING, ASYMETRIC LITHONIA - VAP LED, 114 WATTS, WET LOCATION FITTING AS REQUIRED, WITH SURFACE MOUNT BRACKETS, COVER, AND GUARD AS REQUIRED, OR CREE EQUIVALENT.



B - LED PERIMETER WALL PAK - 120V AC, NEMA 4 RATED, HUBBEL PGM3-SERIES. PROVIDE WITH INTEGRAL PHOTOCELL.

TETRA TECH
www.tetratech.com
3497 COOLIDGE ROAD
EAST LANSING, MI. 48823
PHONE: (517)316.3963 FAX: (517)484.8140

MARK	DATE	DESCRIPTION	BY
1	6/22/21	ISSUED FOR BIDS	

CITY OF FLINT, MICHIGAN

FLINT WPC GRIT BAT "B" SYSTEM & PRIMARY TANKS IMPROVEMENTS

ELECTRICAL LIGHTING DETAILS

PROJ:	200-156238-21001
DESN:	GCJ
DRWN:	JLS
CHKD:	GCJ

E-206

OF 46

Copyright: Tetra Tech

Bar Measures 1 inch, otherwise drawing not to scale

6/21/2021 3:47:57 PM - \\TT.LOCAL\IER\PROJECTS\LANSING\IER\156238\200-156238-21001\CAD\SHEETFILES\EIE-206 ELECTRICAL LIGHTING DETAILS.DWG - SHANK, JASON

PRIMARY TANK NO.7 | PRIMARY TANK NO.8 | PRIMARY TANK NO.9 | PRIMA

PRIMARY TANKS INFLUENT CHANNEL

GRIT TANK CHANNEL BELOW

GRIT DEWATERING BUILDING

ELECTRICAL CONTROL ROOM

GRIT TANK NO.3
Ave L.L. Elev. 720.16

GRIT TANK NO.4
Ave L.L. Elev. 720.16

DEMOLISH EXISTING CONTROL PANEL, CONDUIT/WIRE.

REMOVE EX. GATES

REMOVE DOOR

REMOVE EX. 2" SPRAY WATER

REMOVE EX. BAFFLE WALL

REMOVE EX. SWING DIFFUSER HEADER

REMOVE EX. GRIT BUCKET ELEVATORS NO. 1 & NO. 2

REMOVE EX. 6" AIR HEADER

REMOVE EX. GRIT WASHER

REMOVE EX. 24" ENCLOSED GRIT BELT CONVEYORS

REMOVE EX. GRIT TANKS SCREW CONVEYOR DRIVE

REMOVE EX. 8" GRIT DEWATERING TANK EFFLUENT

REMOVE EX. 4" GRIT PIPING

EXISTING MCC-7D

NOTES:

1. DEMOLISH EXISTING MOTORS, ACTUATORS, STARTERS, VFD'S, CONDUIT, WIRE BACK TO POWER SOURCE AND PLC I/O PANEL.
2. DEMOLISH EXISTING CONDUIT, CONTROL WIRES, AND SHIELDED CABLES BACK TO PLC PANEL.
3. DEMOLISH EXISTING FLOW METERS, LEVEL TRANSMITTERS, FLOAT SWITCHES, AND ASSOCIATED INSTRUMENTATION. REMOVE BACK TO EXISTING POWER SOURCE AND BACK TO EXISTING CONTROL PANEL.
4. PATCH HOLES IN WALLS, FLOORS, ETC. SEAL WITH NON-SHRINK GROUND. WHERE CONDUITS CAN NOT BE REMOVED, CUT OFF FLUSH AT WALL OR FLOOR AND SEAL OPENINGS WITH NON-SHRINK GROUND AFTER REMOVAL OF WIRE.
5. REFER TO PROCESS DEMOLITION DRAWINGS FOR ADDITIONAL INFORMATION ON EQUIPMENT TO BE DEMOLISHED.
6. DEMOLISH EXISTING PROCESS EQUIPMENT SHOWN. DEMOLISH BACK TO POWER AND CONTROL SOURCES.
7. DEMOLISH DISCONNECT SWITCHES, CONTROL STATIONS, FIELD STARTERS, AND ASSOCIATED CONDUIT AND WIRE.
8. DEMOLISH CONDUIT AND WIRE BACK TO EXISTING MOTOR CONTROL CENTER 7D AND 7U. BUCKETS TO REMAIN AS SPARE. PROVIDE NAMETAG AT EACH BUCKET NO LONGER IN USE INDICATING SPARE.
9. EXISTING INTERIOR ROOM AND EXTERIOR LIGHTS TO REMAIN. THESE WERE RECENTLY UPGRADED BY OWNER AND ARE TO REMAIN.

- ITEMS TO BE REMOVED

EXISTING DRAWING FROM PREVIOUS PROJECT. PROPOSED WORK SHOWN BOLD, CROSSHATCHED, AND/OR CIRCLED.

GRIT-B BACKGROUND PLAN

NEMA 7 AREA
SCALE: AS SHOWN

Bar Measures 1 inch, otherwise drawing not to scale

TETRA TECH
www.tetratech.com
3497 COOLIDGE ROAD
EAST LANSING, MI. 48823
PHONE: (517)316.3963 FAX: (517)484.8140

MARK	DATE	DESCRIPTION	BY
1	6/22/21	ISSUED FOR BIDS	

CITY OF FLINT, MICHIGAN
FLINT WPC GRIT BAT "B" SYSTEM & PRIMARY TANKS IMPROVEMENTS
GRIT DEWATERING BUILDING
DEMOLITION PLAN
ELEV. 729.25

PROJ:	200-156238-21001
DESN:	GCJ
DRWN:	JLS
CHKD:	GCJ

E-300
OF 46

Copyright: Tetra Tech

6/21/2021 4:17:23 PM - \\TT.LOCAL\IER\PROJECTS\LANSING\IER\156238\200-156238-21001\CADSHEETFILES\E\E-300_EX BACKGROUND PLAN_DEMO.DWG - SHANK, JASON

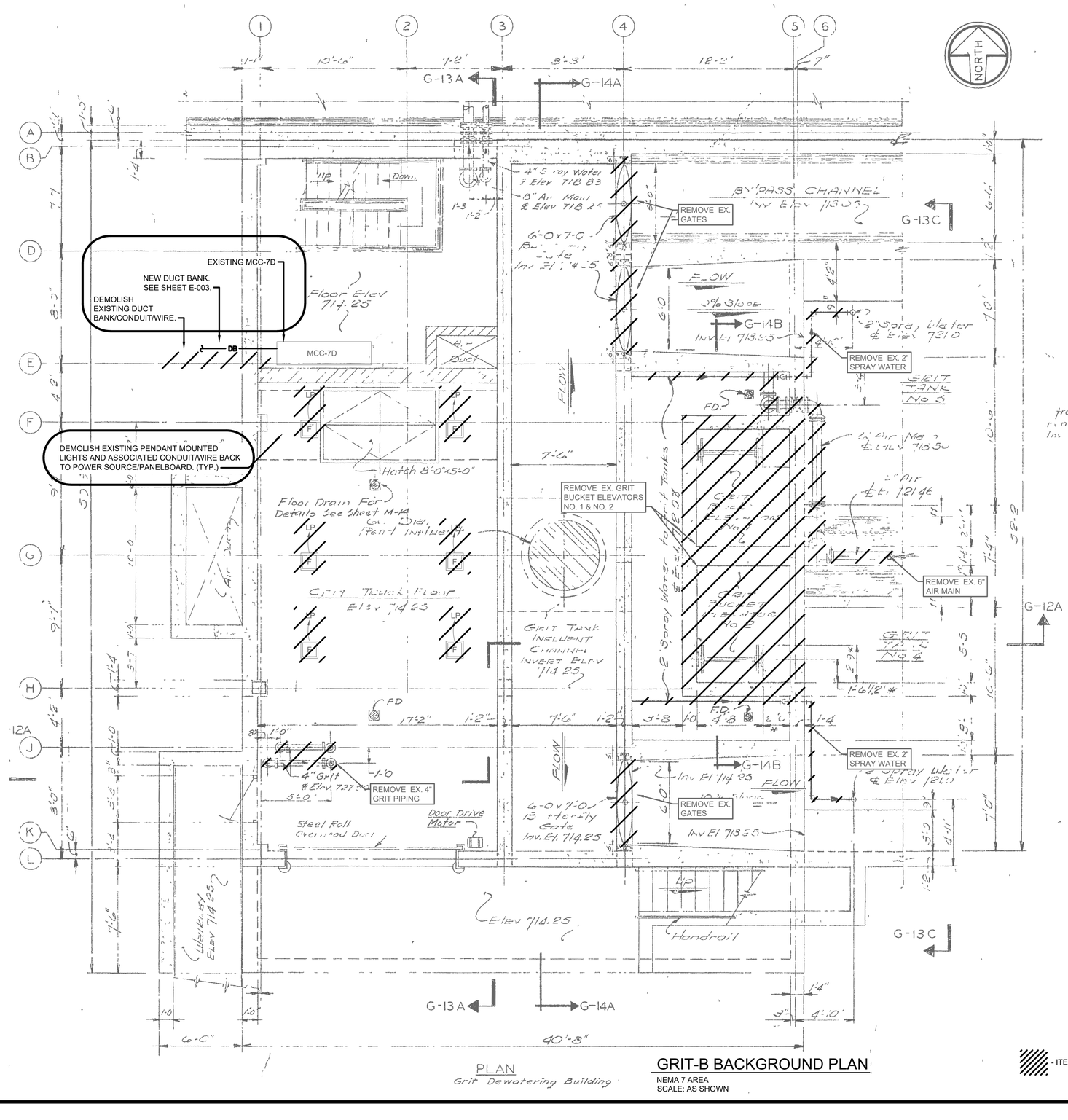

PLAN
Grit Dewatering Building

GRIT-B BACKGROUND PLAN

NEMA 7 AREA
SCALE: AS SHOWN

NOTES:

1. DEMOLISH EXISTING MOTORS, ACTUATORS, STARTERS, VFD'S, CONDUIT, WIRE BACK TO POWER SOURCE AND PLC I/O PANEL.
2. DEMOLISH EXISTING CONDUIT, CONTROL WIRES, AND SHIELDED CABLES BACK TO PLC PANEL.
3. DEMOLISH EXISTING FLOW METERS, LEVEL TRANSMITTERS, FLOAT SWITCHES, AND ASSOCIATED INSTRUMENTATION. REMOVE BACK TO EXISTING POWER SOURCE AND BACK TO EXISTING CONTROL PANEL.
4. PATCH HOLES IN WALLS, FLOORS, ETC. SEAL WITH NON-SHRINK GROUND. WHERE CONDUITS CAN NOT BE REMOVED, CUT OFF FLUSH AT WALL OR FLOOR AND SEAL OPENINGS WITH NON-SHRINK GROUND AFTER REMOVAL OF WIRE.
5. REFER TO PROCESS DEMOLITION DRAWINGS FOR ADDITIONAL INFORMATION ON EQUIPMENT TO BE DEMOLISHED.
6. DEMOLISH EXISTING PROCESS EQUIPMENT SHOWN. DEMOLISH BACK TO POWER AND CONTROL SOURCES.
7. DEMOLISH DISCONNECT SWITCHES, CONTROL STATIONS, FIELD STARTERS, AND ASSOCIATED CONDUIT AND WIRE.
8. DEMOLISH CONDUIT AND WIRE BACK TO EXISTING MOTOR CONTROL CENTER 7D AND 7U. BUCKETS TO REMAIN AS SPARE. PROVIDE NAMETAG AT EACH BUCKET NO LONGER IN USE INDICATING SPARE.
9. EXISTING INTERIOR ROOM AND EXTERIOR LIGHTS TO REMAIN. THESE WERE RECENTLY UPGRADED BY OWNER AND ARE TO REMAIN.

- ITEMS TO BE REMOVED

EXISTING DRAWING FROM PREVIOUS PROJECT. PROPOSED WORK SHOWN BOLD, CROSSHATCHED, AND/OR CIRCLED.

TETRA TECH
www.tetratech.com
3497 COOLIDGE ROAD
EAST LANSING, MI. 48823
PHONE: (517)316.3963 FAX: (517)484.8140

MARK	DATE	DESCRIPTION
1	6/22/21	ISSUED FOR BIDS

BY

CITY OF FLINT, MICHIGAN
FLINT WPC GRIT BAT "B" SYSTEM & PRIMARY TANKS IMPROVEMENTS
GRIT DEWATERING BUILDING
DEMOLITION PLAN
ELEV. 714.25

PROJ:	200-156238-21001
DESN:	GCJ
DRWN:	JLS
CHKD:	GCJ

E-301
OF 46

Copyright: Tetra Tech

Bar Measures 1 inch, otherwise drawing not to scale

6/21/2021 4:19:52 PM - \\TT.LOCAL\IER\PROJECTS\LANSING\IER\156238\200-156238-21001\CAD\SHEETFILES\E\E-301_EX BACKGROUND PLAN_DEMO_II.DWG - SHANK, JASON

GRIT-B BACKGROUND PLAN

NEMA 7 AREA
SCALE: AS SHOWN

NOTES:

1. DEMOLISH EXISTING MOTORS, ACTUATORS, STARTERS, VFD'S, CONDUIT, WIRE BACK TO POWER SOURCE AND PLC I/O PANEL.
2. DEMOLISH EXISTING CONDUIT, CONTROL WIRES, AND SHIELDED CABLES BACK TO PLC PANEL.
3. DEMOLISH EXISTING FLOW METERS, LEVEL TRANSMITTERS, FLOAT SWITCHES, AND ASSOCIATED INSTRUMENTATION. REMOVE BACK TO EXISTING POWER SOURCE AND BACK TO EXISTING CONTROL PANEL.
4. PATCH HOLES IN WALLS, FLOORS, ETC. SEAL WITH NON-SHRINK GROUND. WHERE CONDUITS CAN NOT BE REMOVED, CUT OFF FLUSH AT WALL OR FLOOR AND SEAL OPENINGS WITH NON-SHRINK GROUND AFTER REMOVAL OF WIRE.
5. REFER TO PROCESS DEMOLITION DRAWINGS FOR ADDITIONAL INFORMATION ON EQUIPMENT TO BE DEMOLISHED.
6. DEMOLISH EXISTING PROCESS EQUIPMENT SHOWN. DEMOLISH BACK TO POWER AND CONTROL SOURCES.
7. DEMOLISH DISCONNECT SWITCHES, CONTROL STATIONS, FIELD STARTERS, AND ASSOCIATED CONDUIT AND WIRE.
8. DEMOLISH CONDUIT AND WIRE BACK TO EXISTING MOTOR CONTROL CENTER 7D AND 7U. BUCKETS TO REMAIN AS SPARE. PROVIDE NAMETAG AT EACH BUCKET NO LONGER IN USE INDICATING SPARE.
9. EXISTING INTERIOR ROOM AND EXTERIOR LIGHTS TO REMAIN. THESE WERE RECENTLY UPGRADED BY OWNER AND ARE TO REMAIN.

- ITEMS TO BE REMOVED

EXISTING DRAWING FROM PREVIOUS PROJECT. PROPOSED WORK SHOWN BOLD, CROSSHATCHED, AND/OR CIRCLED.

TETRA TECH
www.tetratech.com
3497 COOLIDGE ROAD
EAST LANSING, MI. 48823
PHONE: (517)316.3963 FAX: (517)484.8140

MARK	DATE	DESCRIPTION	BY
1	6/22/21	ISSUED FOR BIDS	

CITY OF FLINT, MICHIGAN
FLINT WPC GRIT BAT "B" SYSTEM & PRIMARY TANKS IMPROVEMENTS
GRIT DEWATERING BUILDING DEMOLITION PLAN ELEV. 702.25

PROJ:	200-156238-21001
DESN:	GCJ
DRWN:	JLS
CHKD:	GCJ

E-302
OF 46

Copyright: Tetra Tech

Bar Measures 1 inch, otherwise drawing not to scale

6/21/2021 3:48:17 PM - \\TT.LOCAL\IER\PROJECTS\LANSING\IER\156238\200-156238-21001\CAD\SHEETFILES\E\E-302_EX BACKGROUND PLAN_DEMO_III.DWG - SHANK, JASON

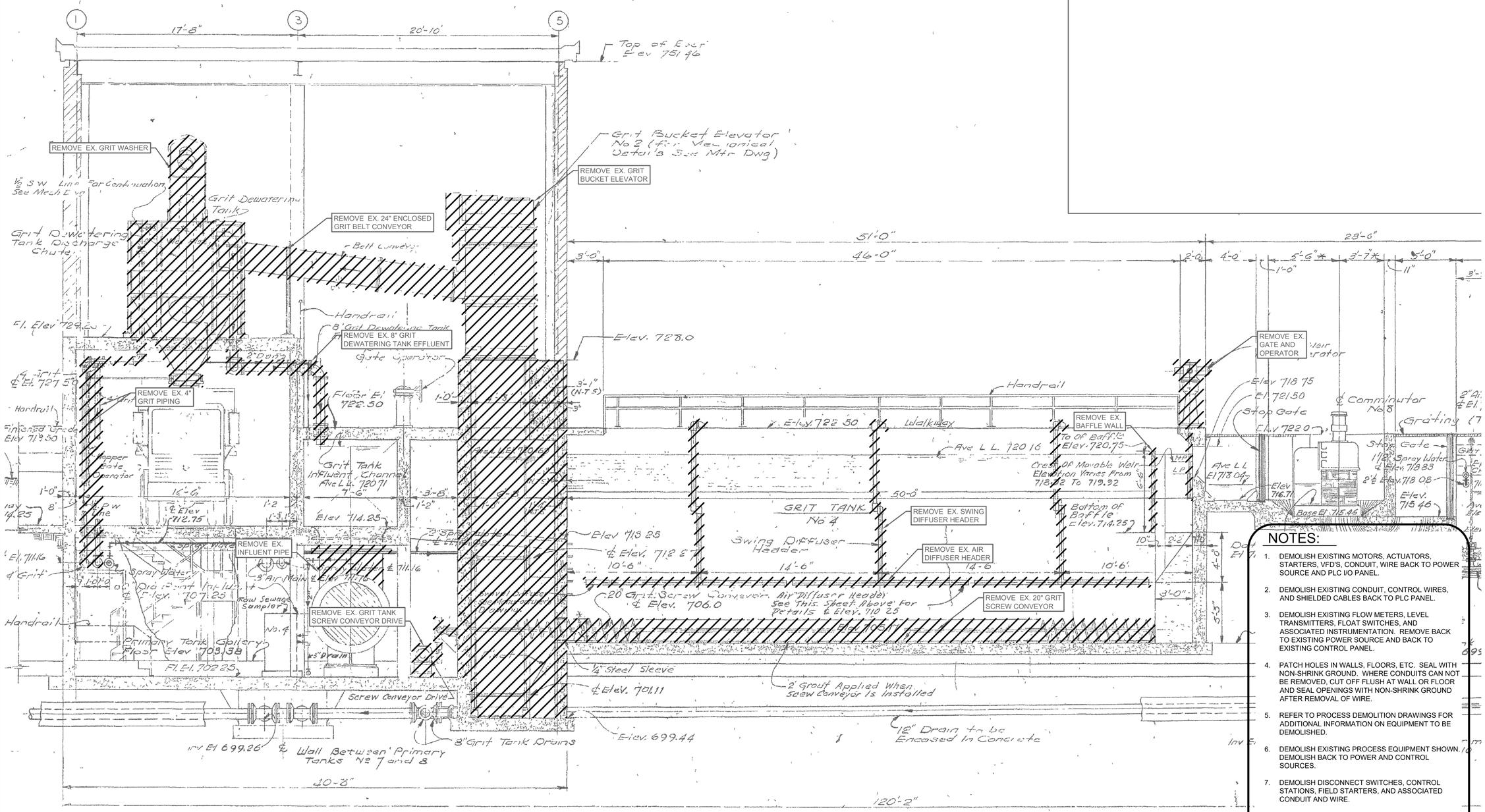

NOTES:

1. DEMOLISH EXISTING MOTORS, ACTUATORS, STARTERS, VFD'S, CONDUIT, WIRE BACK TO POWER SOURCE AND PLC I/O PANEL.
2. DEMOLISH EXISTING CONDUIT, CONTROL WIRES, AND SHIELDED CABLES BACK TO PLC PANEL.
3. DEMOLISH EXISTING FLOW METERS, LEVEL TRANSMITTERS, FLOAT SWITCHES, AND ASSOCIATED INSTRUMENTATION. REMOVE BACK TO EXISTING POWER SOURCE AND BACK TO EXISTING CONTROL PANEL.
4. PATCH HOLES IN WALLS, FLOORS, ETC. SEAL WITH NON-SHRINK GROUND. WHERE CONDUITS CAN NOT BE REMOVED, CUT OFF FLUSH AT WALL OR FLOOR AND SEAL OPENINGS WITH NON-SHRINK GROUND AFTER REMOVAL OF WIRE.
5. REFER TO PROCESS DEMOLITION DRAWINGS FOR ADDITIONAL INFORMATION ON EQUIPMENT TO BE DEMOLISHED.
6. DEMOLISH EXISTING PROCESS EQUIPMENT SHOWN. DEMOLISH BACK TO POWER AND CONTROL SOURCES.
7. DEMOLISH DISCONNECT SWITCHES, CONTROL STATIONS, FIELD STARTERS, AND ASSOCIATED CONDUIT AND WIRE.
8. DEMOLISH CONDUIT AND WIRE BACK TO EXISTING MOTOR CONTROL CENTER 7D AND 7U. BUCKETS TO REMAIN AS SPARE. PROVIDE NAMETAG AT EACH BUCKET NO LONGER IN USE INDICATING SPARE.
9. EXISTING INTERIOR ROOM AND EXTERIOR LIGHTS TO REMAIN. THESE WERE RECENTLY UPGRADED BY OWNER AND ARE TO REMAIN.

GRIT-B BACKGROUND PLAN

NEMA 7 AREA
SCALE: AS SHOWN

- ITEMS TO BE REMOVED

EXISTING DRAWING FROM PREVIOUS PROJECT. PROPOSED WORK SHOWN BOLD, CROSSHATCHED, AND/OR CIRCLED.

TETRA TECH
www.tetratech.com
3497 COOLIDGE ROAD
EAST LANSING, MI, 48823
PHONE: (517)316.3963 FAX: (517)484.8140

MARK	DATE	DESCRIPTION	BY
1	6/22/21	ISSUED FOR BIDS	

CITY OF FLINT, MICHIGAN
FLINT WPC GRIT BAT "B" SYSTEM & PRIMARY TANKS IMPROVEMENTS
GRIT DEWATERING BUILDING DEMOLITION SECTION

PROJ:	200-156238-21001
DESN:	GCJ
DRWN:	JLS
CHKD:	GCJ

E-303
OF 46

Copyright: Tetra Tech

Bar Measures 1 inch, otherwise drawing not to scale

6/21/2021 3:48:23 PM - \\TT.LOCAL\IER\PROJECTS\LANSING\IER\156238\200-156238-21001\CAD\SHEETFILES\E-303_EX BACKGROUND PLAN_DEMO_IV.DWG - SHANK, JASON

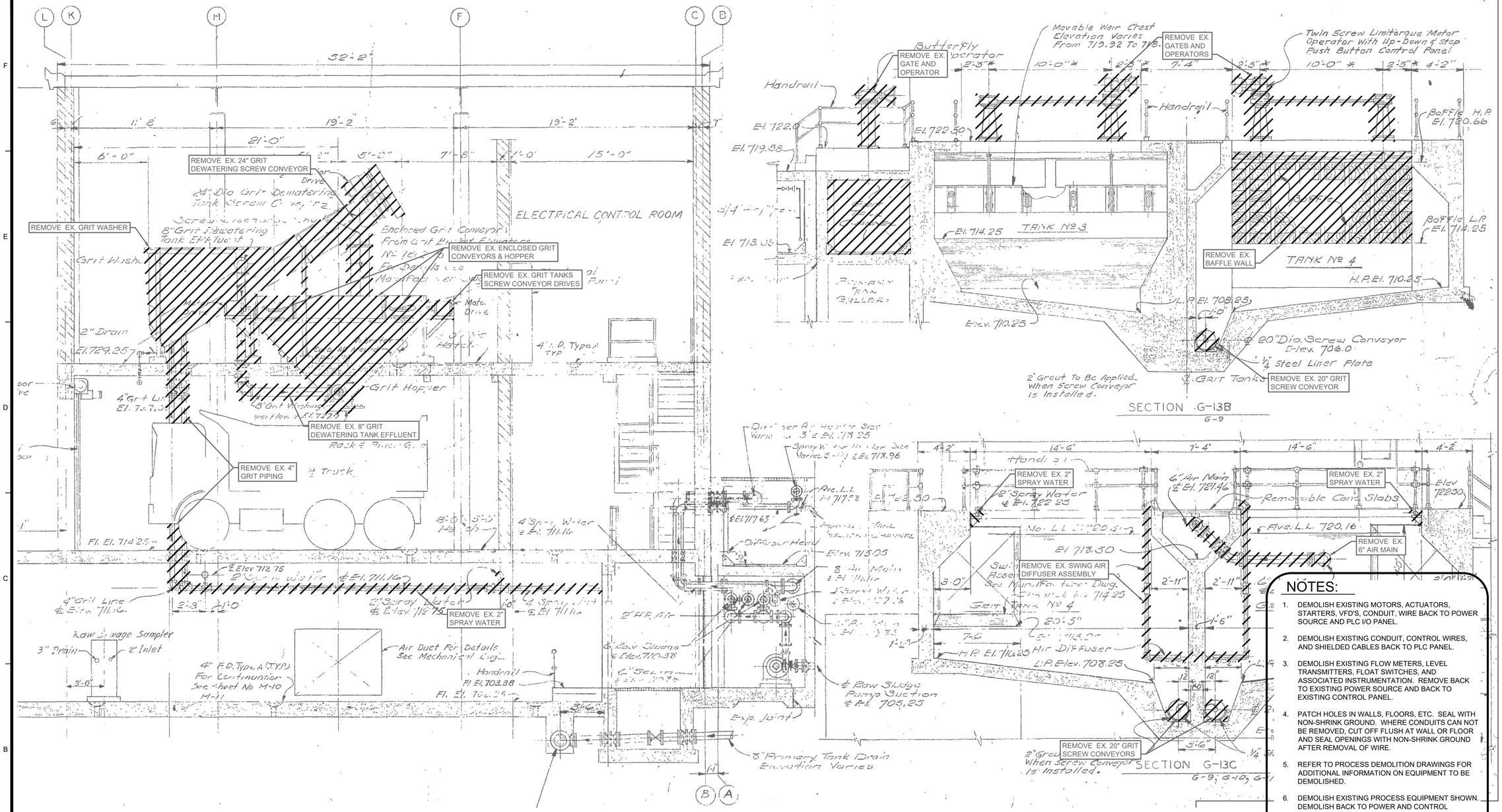

GRIT-B BACKGROUND PLAN

NEMA 7 AREA
SCALE: AS SHOWN

- ITEMS TO BE REMOVED

EXISTING DRAWING FROM PREVIOUS PROJECT. PROPOSED WORK SHOWN BOLD, CROSSHATCHED, AND/OR CIRCLED.

NOTES:

1. DEMOLISH EXISTING MOTORS, ACTUATORS, STARTERS, VFD'S, CONDUIT, WIRE BACK TO POWER SOURCE AND PLC I/O PANEL.
2. DEMOLISH EXISTING CONDUIT, CONTROL WIRES, AND SHIELDED CABLES BACK TO PLC PANEL.
3. DEMOLISH EXISTING FLOW METERS, LEVEL TRANSMITTERS, FLOAT SWITCHES, AND ASSOCIATED INSTRUMENTATION. REMOVE BACK TO EXISTING POWER SOURCE AND BACK TO EXISTING CONTROL PANEL.
4. PATCH HOLES IN WALLS, FLOORS, ETC. SEAL WITH NON-SHRINK GROUND. WHERE CONDUITS CAN NOT BE REMOVED, CUT OFF FLUSH AT WALL OR FLOOR AND SEAL OPENINGS WITH NON-SHRINK GROUND AFTER REMOVAL OF WIRE.
5. REFER TO PROCESS DEMOLITION DRAWINGS FOR ADDITIONAL INFORMATION ON EQUIPMENT TO BE DEMOLISHED.
6. DEMOLISH EXISTING PROCESS EQUIPMENT SHOWN. DEMOLISH BACK TO POWER AND CONTROL SOURCES.
7. DEMOLISH DISCONNECT SWITCHES, CONTROL STATIONS, FIELD STARTERS, AND ASSOCIATED CONDUIT AND WIRE.
8. DEMOLISH CONDUIT AND WIRE BACK TO EXISTING MOTOR CONTROL CENTER 7D AND 7U. BUCKETS TO REMAIN AS SPARE. PROVIDE NAMETAG AT EACH BUCKET NO LONGER IN USE INDICATING SPARE.
9. EXISTING INTERIOR ROOM AND EXTERIOR LIGHTS TO REMAIN. THESE WERE RECENTLY UPGRADED BY OWNER AND ARE TO REMAIN.

TETRA TECH
www.tetratech.com
3497 COOLIDGE ROAD
EAST LANSING, MI. 48823
PHONE: (517)316.3963 FAX: (517)484.8140

MARK	DATE	DESCRIPTION	BY
1	6/22/21	ISSUED FOR BIDS	

CITY OF FLINT, MICHIGAN
FLINT WPC GRIT BAT "B" SYSTEM & PRIMARY TANKS IMPROVEMENTS
GRIT DEWATERING BUILDING DEMOLITION SECTION

PROJ:	200-156238-21001
DESN:	GCJ
DRWN:	JLS
CHKD:	GCJ

E-304
OF 46

Copyright: Tetra Tech

Bar Measures 1 inch, otherwise drawing not to scale

6/21/2021 3:48:29 PM - \\TT_LOCAL\ER\PROJECTS\LANSING\ER\156238\200-156238-21001\CAD\SHEETFILES\E-304_EX BACKGROUND PLAN_DEMO_V.DWG - SHANK, JASON